NAVAL AIR TRAINING COMMAND

NAS CORPUS CHRISTI, TEXAS **CNATRA P-340 (Rev 05-09)**

FLIGHT TRAINING INSTRUCTION

PRIMARY INSTRUMENTS T–34C

2009

DEPARTMENT OF THE NAVY
CHIEF OF NAVAL AIR TRAINING
CNATRA
250 LEXINGTON BLVD SUITE 102
CORPUS CHRISTI TX 78419-5041

CNATRA P-340
N711

28 MAY 09

CNATRA P-340 (REV 05-09)

Subj: FLIGHT TRAINING INSTRUCTION, PRIMARY INSTRUMENTS, T-34C

1. CNATRA P-340 (Rev. 05-09) PAT, "Flight Training Instruction, Primary Instruments, T-34C" is issued for information, standardization of instruction and guidance for all flight instructors and student aviators within the Naval Air Training Command.

2. This publication shall be used as an explanatory aid to the Primary Multi-Service Pilot Training System curriculum. It will be the authority for the execution of all flight procedures and maneuvers therein contained.

3. Recommendations for changes shall be submitted via CNATRA form 1550/19 in accordance with CNATRAINST 1550.6E.

4. CNATRA P-340 (Rev. 09-08 CH-7) PAT is hereby cancelled and superseded.

JAMES A. CRABBE
Chief of Staff

Distribution:
CNATRA N71 (5) Plus Original
CNATRA N73 (1)
COMTRAWING FOUR (600)
COMTRAWING FIVE (800)

FLIGHT TRAINING INSTRUCTION

FOR

PRIMARY INSTRUMENTS

T-34C

Q–2A–0108

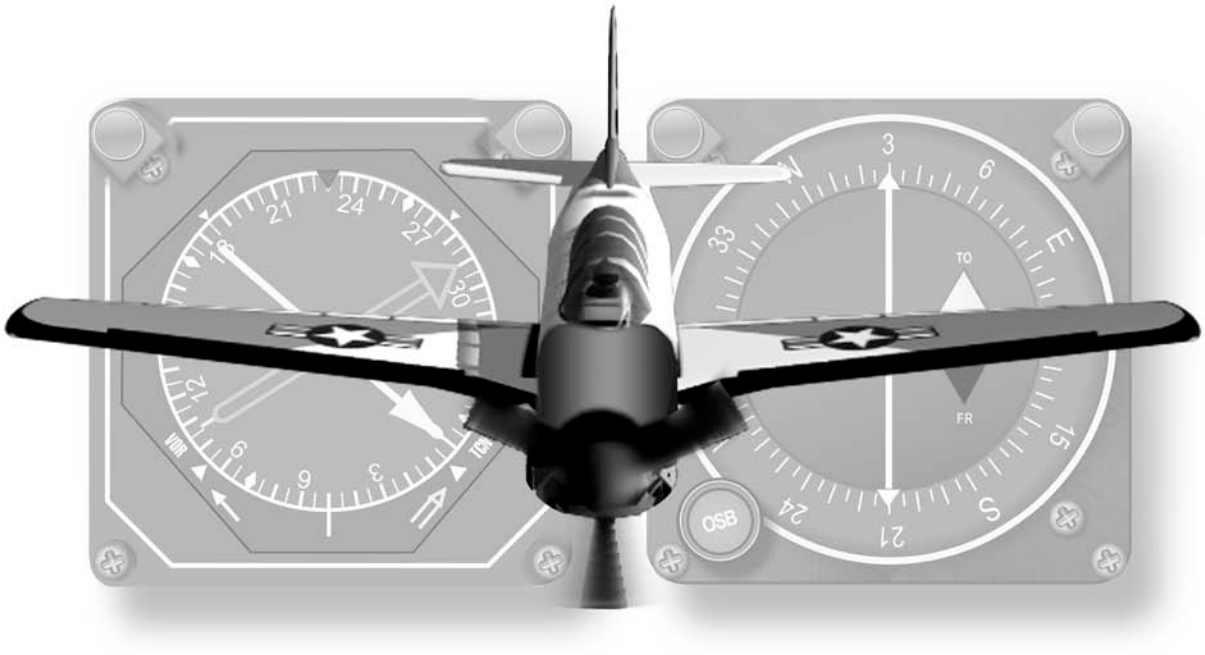

SAFETY/HAZARD AWARENESS NOTICE

This course does not require any special safety precautions other than those normally found on the flight line.

FOREWORD

TERMINAL OBJECTIVES:

1. Upon completion of the Basic Instruments (BI) course, the Student Naval Aviator will be able to fly a T–34C under the hood with reference to the attitude instruments only.

2. Upon completion of the Radio Instruments (RI) course, the Student Naval Aviator will be able to safely pilot a T–34C under Instrument Flight Rules (IFR) in actual instrument meteorological conditions and execute Instrument Procedures for departure, enroute and arrival phases of flight.

STANDARDS:

Conditions and standards are defined in CNATRAINST 1542.140 (series).

INSTRUCTIONAL PROCEDURES:

1. These are flight training courses and will be conducted in the aircraft and simulator.

2. The student will demonstrate a functional knowledge of the material presented through successful completion of the flight maneuvers.

3. All new, changed, or modified data is indicated by a change bar.

INSTRUCTIONAL REFERENCES:

1. T–34C NATOPS Flight Manual

2. Local Standard Operating Procedures Instruction

3. Aeronautical Information Manual

4. NATOPS Instrument Flight Manual

LIST OF EFFECTIVE PAGES

Dates of issue for original and changed pages are:
Original...0…31 Jun 03
Change Transmittal…1…07 Oct 03
Change Transmittal…2…27 Oct 03
Change Transmittal…3…13 Sep 05
Change Transmittal…4…11 Oct 06
Change Transmittal…5…30 Sep 08
Change Transmittal…6…30 Sep 08
Change Transmittal…7…30 Sep 08
Revision1…0…28 May 09
Change Transmittal…1…9 Sep 10

TOTAL NUMBER OF PAGES IN THIS PUBLICATION IS 314 CONSISTING OF THE FOLLOWING:

Page No.	Change No.	Page No.	Change No.
COVER	0	6-37	1
LETTER	0	6-38 – 6-126	0
iii – xiii	0	7-1 – 7-46	0
xiv (blank)	0	8-1 – 8-3	0
1-1 – 1-13	0	8-4 (blank)	0
1-14 (blank)	0	A-1 – A-8	0
2-1 – 2-14	0	B-1 – B-6	0
3-1 – 3-45	0	C-1 – C-2	0
3-46 (blank)	0	D-1 – D-3	0
4-1 – 4-14	0	D-4 (blank)	0
5-1 – 5-8	0	E-1 – E-8	0
6-1 – 6-36	0		

INTERIM CHANGE SUMMARY

The following Changes have been previously incorporated in this manual:

CHANGE NUMBER	REMARKS/PURPOSE
1	Changes made per transmittal letter (09-10-10)

The following interim Changes have been incorporated in this Change/Revision:

INTERIM CHANGE NUMBER	REMARKS/PURPOSE	ENTERED BY	DATE

TABLE OF CONTENTS

LIST OF EFFECTIVE PAGES v
INTERIM CHANGE SUMMARY vi
TABLE OF CONTENTS vii
TABLE OF FIGURES xi

CHAPTER ONE - INTRODUCTION TO BASIC INSTRUMENTS 1-1
100. INTRODUCTION 1-1
101. ATTITUDE INSTRUMENT FLIGHT 1-1
102. ATTITUDE DETERMINATION/VERTIGO 1-2
103. POWER PLUS ATTITUDE EQUALS PERFORMANCE 1-3
104. FLIGHT INSTRUMENTS 1-4
105. FUNCTIONAL SCAN ITEMS 1-11
106. BASIC INSTRUMENT TERMS 1-13

CHAPTER TWO - BASIC INSTRUMENTS GENERAL PROCEDURES 2-1
200. INTRODUCTION 2-1
201. INSTRUMENT SCAN 2-1
202. SCAN PATTERNS 2-5
203. INSTRUMENT CHECKLIST 2-10
204. INSTRUMENT COMPARISON CHECK 2-11
205. REAR COCKPIT BAILOUT 2-12
206. NIGHT PREFLIGHT 2-12
207. REAR COCKPIT LIGHTING 2-12
208. USE OF OXYGEN 2-12
209. INSTRUMENT, GAS, OXYGEN REPORT (IGO) 2-13
210. ASSUMING CONTROL OF THE AIRCRAFT 2-13
211. EMERGENCY PROCEDURES 2-14

CHAPTER THREE - BASIC INSTRUMENTS FLIGHT PROCEDURES 3-1
300. INTRODUCTION 3-1
301. INITIAL CLIMB TO ALTITUDE (ICA) 3-1
302. STRAIGHT AND LEVEL FLIGHT (S&L) 3-2
303. CONSTANT ANGLE OF BANK TURNS (CABT) 3-12
304. RATE TURNS (RT) 3-12
305. CONSTANT AIRSPEED CLIMBS AND DESCENTS 3-15
306. CONSTANT RATE CLIMBS AND DESCENTS (CRC/D) 3-17
307. VERTICAL S–1 PATTERN (S–1) 3-19
308. GCA MANEUVER 3-20
309. APPROACH PATTERN 3-24
310. PENETRATION PATTERN 3-27
311. BASIC APPROACH CONFIGURATION MANEUVER 3-30
312. UNUSUAL ATTITUDES (FULL PANEL) 3-31
313. PARTIAL PANEL INSTRUMENT FLIGHT 3-38
314. UNUSUAL ATTITUDES (PARTIAL PANEL) 3-43

315. DIRECT TO A VOR OR TACAN 3-44
316. VERTIGO DEMONSTRATION 3-44

CHAPTER FOUR - INTRODUCTION TO RADIO INSTRUMENTS 4-1
400. INTRODUCTION 4-1
401. FUNDAMENTALS OF INSTRUMENT NAVIGATION 4-1
402. T–34C NAVIGATION SYSTEMS 4-4
403. VHF OMNIDIRECTIONAL RANGE (VOR) 4-4
404. TACAN 4-4
405. NACWS 4-5
406. RADIO MAGNETIC INDICATOR (RMI) 4-9
407. COURSE DEVIATION INDICATOR (CDI) 4-9
408. TRANSPONDER 4-11
409. BASIC CONFIGURATIONS 4-11
410. INSTRUMENT COMPARISON CHECK 4-13
411. THE 6 Ts 4-14

CHAPTER FIVE - RADIO INSTRUMENTs COMMUNICATIONS 5-1
500. INTRODUCTION 5-1
501. GENERAL RADIO COMMUNICATIONS REQUIREMENTS 5-2
502. SAMPLE RADIO COMMUNICATIONS 5-4

CHAPTER SIX - RADIO INSTRUMENT flight PROCEDURES 6-1
600. INTRODUCTION 6-1
601. INSTRUMENT/EQUIPMENT CHECKOUT 6-1
602. CLEARANCES 6-4
603. DEPARTURES 6-5
604. USE OF THE IND–350 6-12
605. TRACKING 6-17
606. STATION PASSAGE 6-21
607. OVER–THE–STATION INTERCEPT 6-22
608. RADIAL INTERCEPTS 6-23
609. DOUBLE–THE–ANGLE INTERCEPTS 6-24
610. CLIMBS & DESCENTS 6-25
611. CLIMBS 6-25
612. CRUISE POWER DESCENT 6-26
613. TERMINAL DESCENT 6-27
614. INTERSECTIONS 6-28
615. HOLDING 6-32
616. HOLDING DURING ADVERSE WIND CONDITIONS 6-43
617. TACAN HOLDING 6-47
618. CLEARANCE FOR AN APPROACH WHILE IN TACAN HOLDING 6-49
619. SHUTTLE DESCENT 6-54
620. TACAN POINT–TO–POINT NAVIGATION 6-54
621. TACAN ARCING 6-58
622. INSTRUMENT APPROACH PLATES 6-63

623. LOW ALTITUDE INSTRUMENT APPROACH 6-77
624. TEARDROP APPROACH.....6-82
625. PROCEDURE TURN APPROACH.....6-86
626. HOLDING PATTERN APPROACH 6-91
627. ARCING APPROACH 6-97
628. STRAIGHT–IN APPROACH.....6-105
629. RADAR VECTORS TO FINAL APPROACH COURSE 6-114
630. PRECISION APPROACH RADAR (PAR) APPROACH 6-117
631. MISSED APPROACH.....6-124

CHAPTER SEVEN - INSTRUMENT NAVIGATION 7-1
700. INTRODUCTION 7-1
701. STANDARD INSTRUMENT BRIEF..... 7-2
702. INSTRUMENT APPROACH BRIEF 7-2
703. INTERSECTION HOLDING 7-2
704. AIRPORT SURVEILLANCE APPROACH (ASR APPROACH)..... 7-8
705. NO–GYRO PRECISION APPROACH..... 7-9
706. LOCALIZER APPROACH.....7-10
707. TRANSITION TO VISUAL SEGMENT OF THE APPROACH 7-19
708. CIRCLING MANEUVERS 7-20
709. HIGH ALTITUDE APPROACH 7-24
710. GPS PROCEDURES 7-26

CHAPTER EIGHT - CROSS–COUNTRY PLANNING 8-1
800. INTRODUCTION 8-1
801. FLIGHT PROCEDURES..... 8-1

APPENDIX A - GLOSSARY.....A-1

APPENDIX B - SUPPLEMENTARY FLIGHT PROCEDURES AND EMERGENCY PROCEDURES.....B-1
B100. FUEL, POSITION REPORTS B-1
B101. GROUNDSPEED CALCULATIONS.....B-1
B102. TRUE AIRSPEED CALCULATIONS.....B-1
B103. FUEL MANAGEMENT B-2
B104. EMERGENCY FIELD SELECTION.....B-2
B105. ENROUTE WEATHER INFORMATION.....B-2
B106. LOST COMMUNICATIONS B-2
B107. UNINTENTIONAL THUNDERSTORM PENETRATION.....B-3
B108. ICING.....B-3
B109. AIRCRAFT EMERGENCIES UNDER IFR B-4

APPENDIX C - APPROACH PLATE STUDY TECHNIQUE.....C-1
C100. GENERAL C-1
C101. RECOMMENDED APPROACH PLATE STUDY TECHNIQUE.....C-1

APPENDIX D - ADVANCED INSTRUMENT CONCEPTS D-1
D100. GENERAL D-1
D101. RADIAL SPACING D-1
D102. DISTANCE FROM AIRWAY CENTERLINE D-1
D103. 60–TO–1 RULE IN VERTICAL PLANE D-2

APPENDIX E - CREW RESOURCE MANAGEMENT E-1
E100. CREW RESOURCE MANAGEMENT E-1
E101. DECISION MAKING E-1
E102. ASSERTIVENESS E-2
E103. MISSION ANALYSIS E-3
E104. COMMUNICATION E-4
E105. LEADERSHIP E-6
E106. ADAPTABILITY/FLEXIBILITY E-6
E107. SITUATIONAL AWARENESS E-7

TABLE OF FIGURES

Figure 1–1 Visualized Attitude 1-2
Figure 1–2 Attitude Gyro 1-4
Figure 1–3 Altimeter 1-6
Figure 1–4 Vertical Speed Indicator 1-7
Figure 1–5 Airspeed Indicator 1-8
Figure 1–6 Radio Magnetic Indicator 1-9
Figure 1–7 Turn Indicator & Balance Ball 1-11
Figure 1–8 Magnetic Compass 1-12

Figure 2–1 Trim Requirements 2-2
Figure 2-2 Trim Gyro 2-4
Figure 2-3 Trim Gyro 2-4

Figure 3–1 Straight and Level Flight: Normal Cruise Instrument Presentation 3-5
Figure 3–2 OFF Altitude and OFF Airspeed 3-6
Figure 3–3 OFF Altitude and OFF Airspeed Corrections (1000 Feet or Less) 3-7
Figure 3–4 Correcting to Original Altitude 3-8
Figure 3–5 ON Airspeed and OFF Altitude 3-9
Figure 3–6 ON Airspeed and OFF Altitude 3-10
Figure 3–7 Correcting to a Heading 3-11
Figure 3–8 GCA Maneuver 3-23
Figure 3–9 Approach Pattern 3-26
Figure 3–10 Penetration, BAC Maneuver and Missed Approach 3-29
Figure 3–11 Nose Low Recovery 3-35
Figure 3–12 Nose High Recovery 3-36
Figure 3–13 Extreme Nose High Recovery 3-37
Figure 3–14 Partial Panel Scan 3-39

Figure 4–1 VOR Navigation 4-2
Figure 4–2 RMI Orientation 4-3
Figure 4–3 TACAN, VOR, and Audio Box 4-7
Figure 4–4 NACWS Primary DME Screen 4-8
Figure 4–5 NACWS Proximity Screen 4-8
Figure 4–6 Radio Magnetic Indicator (RMI) 4-9
Figure 4-7 IND-350 4-10
Figure 4–8 Collins Transponder 4-11

Figure 6–1 Ranger-Five Departure 6-8
Figure 6–2 MENTR-NINE Departure (KNPA) 6-9
Figure 6–3 O'Hare One Departure 6-10
Figure 6–4 IFR Takeoff Minimums and (Obstacle) Departure Procedures 6-11
Figure 6–5 Aircraft on 185º Radial 6-13
Figure 6–6 Aircraft on 185º Radial 6-14
Figure 6–7 IND–350 with TO–FROM Indicators 6-15

Figure 6–8 Aircraft on 360º Radial 6-15
Figure 6–9 Aircraft East of Course 6-16
Figure 6–10 Aircraft North of Station Heading 180º 6-16
Figure 6–11 Aircraft Drifting to the East 6-17
Figure 6–12 Aircraft on 263º Radial 6-18
Figure 6–13 Aircraft on 253º Radial 6-19
Figure 6–14 Aircraft on Intercept Heading 6-20
Figure 6–15 Aircraft on Intercept Heading 6-20
Figure 6–16 Aircraft on 085º Radial 6-25
Figure 6-17 Passing Through an Intersection 6-30
Figure 6–18 Holding Pattern 6-35
Figure 6–19 Standard Holding 6-36
Figure 6–20 Non–standard Holding 6-36
Figure 6–21 Determining Turn Direction 6-38
Figure 6–22 Turning Inbound to Holding Fix 6-39
Figure 6–23 No–Wind Orbit 6-41
Figure 6–24 Correction Orbit 6-42
Figure 6-25 Entry Orbit 6-44
Figure 6–26 No–Wind Orbit 6-45
Figure 6–27 No–Wind Orbit 6-45
Figure 6–28 No–Wind Orbit (Extremely Strong Wind) 6-46
Figure 6–29 TACAN Holding Fix 6-49
Figure 6–30 VOR/DME or TACAN RWY 17 (KNGP) 6-51
Figure 6–31 TACAN RWY 23 (NSE) 6-52
Figure 6–32 Holding at a DME Fix (REDDI) 6-53
Figure 6–33 TACAN PTP 6-56
Figure 6–34 Calculating a PTP in the cockpit 6-56
Figure 6–35 TACAN Arcing/Arcing Maneuver 6-62
Figure 6–36 VOR RWY 19 (KNPA) 6-65
Figure 6–37 VOR-A 6-66
Figure 6–38 VOR or GPS RWY 35 (PRX) 6-67
Figure 6–39 VOR/DME Z or TACAN Z RWY 13R (KNGP) 6-68
Figure 6–40 ILS RWY 13 (CRP) 6-69
Figure 6–41 TACAN RWY 5 (KHST) 6-70
Figure 6–42 Profile View 6-71
Figure 6–43 IFR Landing Minima 6-72
Figure 6–44 Circling Approach Area 6-73
Figure 6–45 Aerodrome Data Box 6-74
Figure 6–46 Vertical Descent Angle 6-75
Figure 6–47 New Approach Plate Format 6-76
Figure 6–48 L-17/18 6-80
Figure 6–49 VOR–A (CEW) 6-81
Figure 6–50 VOR RWY 15 (KWRB) 6-84
Figure 6–51 VOR RWY 6 (KNHK) 6-85
Figure 6–52 VOR or GPS RWY 16 (DAB) 6-89
Figure 6–53 VOR or TACAN-A (PFN) 6-90

Figure 6-54 Holding Fix Descent 6-91
Figure 6–55 VOR or GPS-A (MAI) 6-93
Figure 6–56 VOR or GPS-B (HLR) 6-94
Figure 6–57 VOR-A (ALI) 6-95
Figure 6–58 VOR-A (DRT) 6-96
Figure 6–59 Leading the Turn 6-98
Figure 6–60 Maneuvering Turn 6-99
Figure 6–61 Arc to Radial 6-100
Figure 6–62 TACAN RWY 23 (NSE) 6-102
Figure 6–63 VOR/DME Z or TACAN Z RWY 13R (KNGP) 6-103
Figure 6–64 VOR/DME Y or TACAN Y RWY 13R (KNGP) 6-104
Figure 6–65 VOR/DME Z or TACAN Z RWY 31L (KNGP) 6-108
Figure 6–66 VOR RWY 29 6-109
Figure 6–67 VOR/DME RWY 28 (CLL) 6-110
Figure 6–68 VOR/DME RWY 31 (ACY) 6-111
Figure 6–69 L-13/14 6-112
Figure 6–70 VOR or GPS-B (M51) 6-113
Figure 6–71 RVFAC (No FAF Depicted) 6-116
Figure 6–72 RVFAC (FAF Depicted) 6-117
Figure 6–73 Radar Instrument Approach Minimums 6-120
Figure 6–74 PAR "Box Pattern" 6-123

Figure 7–1 Holding at ATHIS 7-3
Figure 7–2 Study Intersection 7-4
Figure 7–3 Intersection Holding 7-5
Figure 7–4 Tail-Radial-Turn 7-6
Figure 7–5 Normal Limits of Localizer Coverage 7-11
Figure 7–6 Localizers 7-11
Figure 7–7 L-17D 7-13
Figure 7–8 ILS RWY 17 (PNS) 7-15
Figure 7–9 ILS RWY 12 (MIA) 7-16
Figure 7–10 LOC BC RWY 35L (LBB) 7-17
Figure 7–11 LOC BC RWY 17L (ABI) 7-18
Figure 7–12 Circling Approach Area 7-21
Figure 7–13 Circling Maneuvers 7-22
Figure 7–14 Missed Approach from a Circling Maneuver 7-23
Figure 7–15 Penetration course 7-25
Figure 7-16 "T" Approach 7-30
Figure 7-17 RNAV (GPS) Z RWY 33 7-31
Figure 7-18 RNAV (GPS) Y RWY 33 7-32

Figure B-1 Emergency Landing B-5

Figure D-1 Radial Spacing D-1
Figure D-2 Vertical Plane D-2

THIS PAGE INTENTIONALLY LEFT BLANK

CHAPTER ONE
INTRODUCTION TO BASIC INSTRUMENTS

100. INTRODUCTION

The Basic Instrument Procedures and Patterns are intended to provide the student with a sound basis for progressing to Radio Instrument navigation. The ability of the naval aviator to perform proper instrument flight will transform periods of bad weather and low visibility from a liability to an asset for the successful completion of military missions, especially when used in combination with radio, radar, and target recognition devices.

To achieve the proficiency necessary for "all weather" flying, the student must acquire knowledge and skill in three major areas.

1. Attitude Instrument Flight

2. Instrument Navigational Procedures

3. Weather Analysis

The Basic Instrument curriculum will provide the requisite skill in the first area, attitude instrument flight.

101. ATTITUDE INSTRUMENT FLIGHT

All flight is based on attitude flying. When flying contact (with visual reference to the horizon), we control the complete performance of our aircraft by applying a specific amount of power and placing the aircraft's nose and wings in a precise position or "attitude" relative to the horizon. However, when operating in the clouds or during periods of low visibility, this external attitude reference line disappears and reliable contact attitude flight cannot be continued. With the advent of the first flight indicator instrument, pilots no longer needed to depend on visual contact with the actual earth horizon to aid in "setting" and maintaining desired nose and wing attitudes. Attitude flight could still be accomplished during "instrument" conditions by replacing the actual horizon with the artificial horizon in the attitude gyro. Thus, the attitude concept of flight does not change as a transition is made to instrument flight. In fact, this attitude depicted by the gyro's miniature aircraft and horizon bar is in most cases more precise than the contact presentation.

When flying contact, the basic attitude outside the aircraft is verified by crosschecking certain instruments in the cockpit; for example, in straight and level normal cruise flight, the wings are leveled and the nose is set on the horizon, then the radio magnetic indicator (RMI) is checked for proper heading, the altimeter for current altitude, and the vertical speed indicator (VSI) for the earliest indication of a trend and rate of departure from level flight. Obviously, the same principle is true for attitude instrument flight. The pilot establishes an attitude on the gyro, and after smoothly introducing trim to support the desired attitude, confirms the attitude by systematically crosschecking other instruments. Thus, even though there are obviously contrasting elements between contact and instrument flight, none of the fundamentals change.

102. ATTITUDE DETERMINATION/VERTIGO

What is the difference between visual and instrument flight? The difference could be termed as "sensations of flight." The inner ear and muscle movements produce body sensations that are unreliable when in a three–dimensional element such as the air. During contact flight, we tend to ignore all these erroneous sensations because our sight, the most trusted sensing device, tells us the correct attitude. During instrument conditions, when visual contact with the ground is lost, the most common mistake is to rely on the other senses for attitude determination. This produces the effect of being in one attitude while believing to be in another. The term for this disorientation is vertigo. It can be combated with a thorough knowledge of the conditions that cause it and an absolute faith in the flight instruments. The vertigo demonstration and unusual attitudes are introduced in order to acquaint the student pilot with unreliable body sensations and build confidence in the capabilities of his/her instruments while practicing unusual attitude recognition and return of the aircraft to controlled instrument flight.

Vertigo is a problem during instrument conditions because visual contact with the ground is lost. However, the attitude gyro is used to immediately regain visual presentation. Combining gyro presentation of aircraft attitude and artificial horizon with the supporting crosscheck instruments in a consistent and efficient sequence, develops what is known as an attitude instrument scan pattern. Once an instrument scan pattern has been developed, "vision through instruments" is possible.

Success in instrument flight depends on your ability to see not the instruments, but the picture they portray (Figure 1–1).

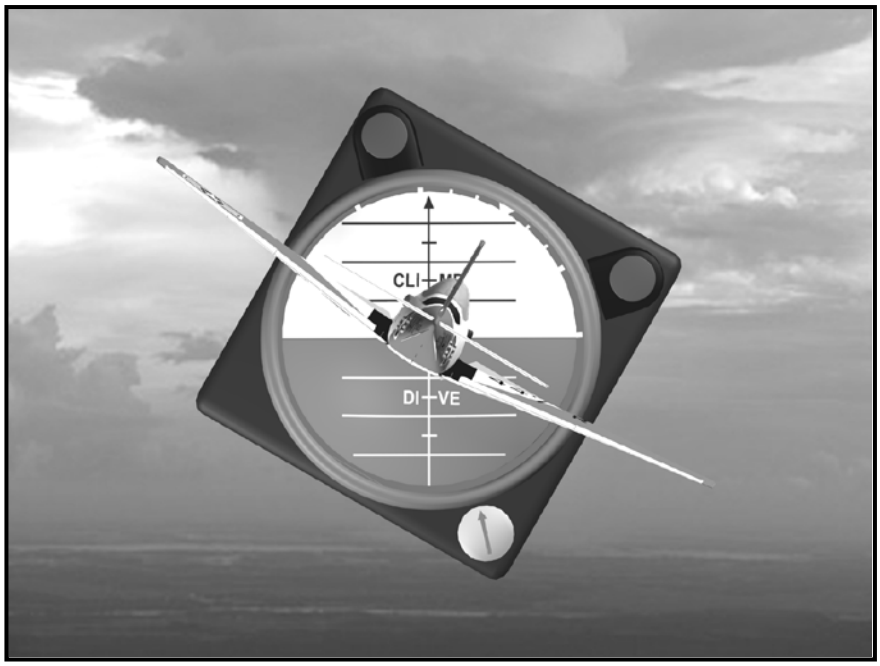

Figure 1–1 Visualized Attitude

To understand this picture, one must interpret what is "seen" and then take effective control action. Proper interpretation of this "vision through instruments" requires an understanding of:

1. The functions, indications, and limitations of the instruments.

2. The forces that enable an airplane to fly.

3. The response of the controls to these forces and the combination of power and balanced attitude necessary to deliver the desired balanced flight performance.

Instrument flying is mastered when the instrument panel is used as a lens or window to "see" the airplane's attitude with respect to the three dimensions in which it travels and effective control action is taken to maintain the desired performance and attitude.

By "scanning" the instruments, the three–dimensional attitude of the aircraft is available at any particular moment. If it is necessary to change the attitude, airspeed, or aircraft configuration, simply use power with coordinated primary control surface action. Develop the required power and balanced flight attitude condition to obtain the desired performance. Remember, attitude instrument flight is nothing more than the use of the flight instruments to "see" the three–dimensional aircraft attitude in relation to the actual horizon. Control forces are applied just as in contact flight to adjust the nose, wing position, and rudder to the desired attitude to produce the desired performance.

103. POWER PLUS ATTITUDE EQUALS PERFORMANCE

Balanced flight is the flight condition in which primary aircraft control surfaces exactly compensate for the effects of applied aircraft power and airspeed during a specific maneuver performance and is characterized by an absence of aircraft yaw. Specifically, balanced flight occurs when the aircraft's longitudinal (nose–to–tail) axis is coincident with the aircraft flight path regardless of flight maneuver, airspeed or power applied, including turns, climbs/descents, or any combination. When yaw exists, the aircraft power and attitude combination is not optimized and performance will be degraded from that which might be anticipated.

For every power and balanced flight attitude combination, a specific performance may be expected. Power coupled with a specific balanced aircraft maneuvering attitude controls the performance of the aircraft. To illustrate, if we apply climb power without raising the nose to climb attitude, we simply build up airspeed without climbing. Alternatively, if we place the nose of the aircraft in a climbing attitude, but do not add power, we gain a small amount of altitude as airspeed decreases. From these simple facts, we realize power and balanced flight attitude are allies. Together, they form a combination resulting in efficient flight performance and giving us a guiding concept for attitude instrument flight. In addition, since many combinations of these two factors are required during a routine instrument flight, corresponding trim adjustments must be made immediately following each change in power and/or attitude to compensate for overall changes in aircraft performance and to maintain the aircraft in or return the aircraft to a balanced flight, balance ball centered condition. Good trim technique applied in a timely fashion will enable you to maintain a balanced flight attitude during any maneuver and throughout any performance transition without holding variable or continuous control pressure.

104. FLIGHT INSTRUMENTS

Think of your instrument panel as your window to the outside world. Through instruments, you may readily visualize the attitude of the aircraft, interpret the power output of the engine, and check the resulting flight performance. From this overall picture, you make continual adjustments in power and attitude, supported by trim, in order to achieve the desired performance. However, before this picture becomes clear and complete, you must have a thorough knowledge of the instruments; not only their contribution to the overall picture, but also, each instrument's activating source.

1. Attitude Indicator – Attitude Gyro/Vertical Gyro Indicator (VGI)

   a. The attitude gyro (Figure 1–2) provides the pilot with constant visual indication of aircraft pitch and roll. A complete description of this system is found in NATOPS. The attitude gyro is your primary attitude instrument. There are several obvious reasons for this, which must be emphasized:

      i. It is the only direct reading instrument. In other words, it shows exactly the amount of bank or nose pitch being utilized.

      ii. It shows attitude change immediately. There is no lag in this instrument.

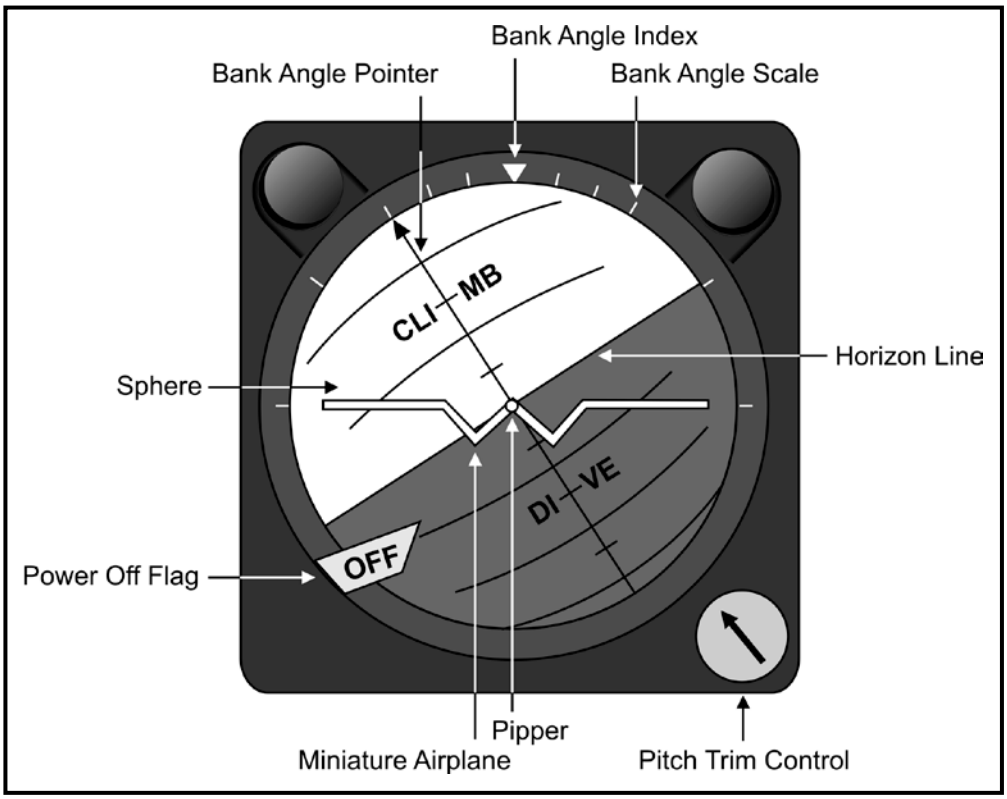

Figure 1–2 Attitude Gyro

iii. It directly displays two primary components of aircraft attitude, nose and wing. In contrast, the turn needle displays wing attitude indirectly by presenting rate gyro precession induced by a changing aircraft heading. With an aircraft in balanced flight, turn needle precession (turning) is indicative of an aircraft in a banking maneuver. The balance ball directly presents aircraft yaw, the state of flight balance and confirms alignment of the aircraft longitudinal axis nose to tail. The other instruments present either a nose or wing crosscheck indication. The VGI is the primary reference for:

(a) **All attitude changes.** These include rolling the miniature aircraft on the attitude gyro into and out of turning maneuvers, transitioning the miniature aircraft to a climb or descent, and correcting for miniature aircraft attitude position errors determined through the indications of other supporting crosscheck instruments.

(b) **All power changes.** The primary consideration is a precisely constant planned aircraft attitude supported by properly coordinated power to produce a desired performance. Set desired power, watching the gyro to maintain the planned aircraft maneuver attitude and check power in the desired range. After the power control lever (PCL) has stopped, glance briefly at the torque setting. Reset power to the exact setting, then trim to fix the new attitude.

(c) **Trimming the aircraft.** Using the miniature aircraft on the attitude gyro, set an attitude and immediately trim the aircraft to relieve the primary control surface pressures necessary to hold that attitude. Trimming is performed while studying the gyro and is most efficiently and effectively accomplished in the sequence rudder, elevator, and aileron.

b. There is a built–in precession error in the gyro, which is most noticeable when rolling into turns. This means the new attitude set during a turn may not be completely accurate and is the reason for attitude crosscheck instruments. Two redeeming features of precession are that once it is discovered by using the crosscheck instruments as a guide, a new (precessed) position may be determined for the gyro and it can be flown accurately, and after rolling out of the bank, a self–leveling feature of the gyro slowly returns the horizon bar to its original position.

c. The attitude gyro is set on the ground by aligning the arrow on the adjustment knob with the white index mark on the face of the instrument. When airborne, if it is necessary to reset the instrument, do so only in straight and level flight at normal cruise by aligning the miniature airplane with the horizon line. Do not reset for changes of airspeed or when the gyro is precessing.

2. Encoder Altimeter (Front Cockpit)

The altimeter (Figure 1–3) is the nose attitude crosscheck instrument for all level flight conditions (either straight or turning), and a performance instrument for climbs and descents. Since it is a pressure instrument, there is an inherent lag. For example, if an aircraft had been maintaining a constant altitude and then commenced a climb or descent, the altimeter would not

immediately indicate a change of altitude. In addition, if an aircraft has been in a descent and makes a transition to a climb, the altimeter will momentarily continue to indicate a descent with the aircraft in a climbing attitude. The foregoing is one basic reason for transitioning exclusively on the attitude gyro. A complete description of this system can be found in NATOPS.

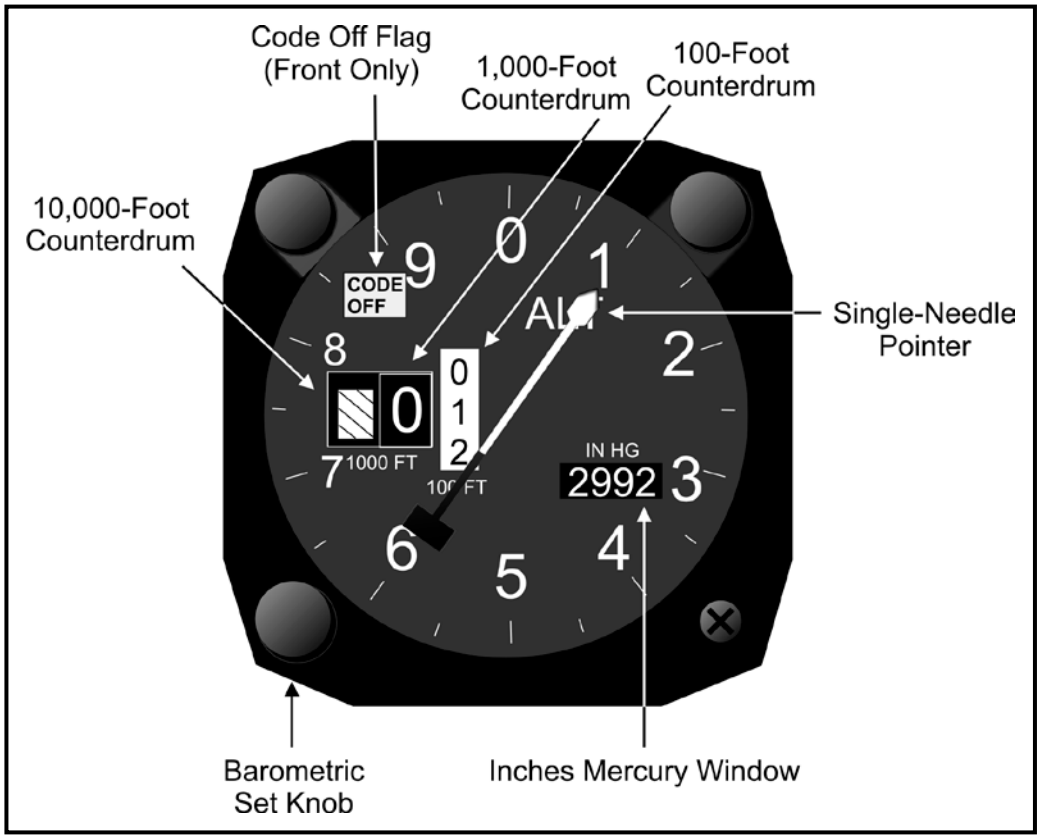

Figure 1–3 Altimeter

3. **Barometric Altimeter (AFT Cockpit)**

The barometric altimeter and encoding altimeter (Figure 1–3) function identically as an attitude crosscheck or performance instrument. The only difference is that the barometric altimeter lacks the circuitry to provide altitude information to the transponder. A complete description of this system can be found in NATOPS.

4. **Vertical Speed Indicator**

a. The vertical speed indicator (VSI) (Figure 1–4) measures the rate of change of altitude. It is activated by the differential of static air pressures between ambient and internal instrument air, which is permitted to equalize through a metered air flow orifice in the instrument. This differential is indicated by the pointer on the face of the instrument and calibrated in terms of the rate at which the altitude is changing during a climb or descent. Refer to NATOPS for additional information.

b. **Use and Limitations.** The VSI is used in conjunction with the altimeter in all level flight conditions as a nose attitude crosscheck instrument. In addition, it is used as a performance instrument during constant rate climbs and descents. Because of VSI sensitivity to changes in static pressure and its ability to display climb or descent rates resulting from static pressure differentials, it is of extreme value in achieving smooth, sustained precision flying. The VSI provides the pilot with the earliest quantitative indication that a change in nose attitude has occurred. Since the VSI is a pressure instrument, there is an inherent lag in its data presentation.

Figure 1–4 Vertical Speed Indicator

c. The indications of the vertical speed indicator are reliable in relatively smooth air after the aircraft has stabilized in level flight. If the needle reads zero, the aircraft is maintaining a constant altitude. If the needle is indicating a rate of descent or climb, the aircraft is not maintaining a constant altitude. Likewise, when the VSI needle is indicating a constant rate of descent or climb the aircraft is climbing or descending at a specific rate. With constant power, if the needle should later indicate a rate of climb or descent greater or less than originally stabilized, a change in aircraft attitude has occurred.

5. **Airspeed Indicator**

a. Under standard atmospheric conditions at sea level, the airspeed indicator (Figure 1–5) shows the speed at which the airplane is moving through the surrounding air mass. The pointer is activated by the difference in pressure between static air pressure and the impact air pressure from the pitot tube. The face of the instrument is calibrated in knots. The airspeed indicator provides a continuous indication by which you can maintain flight within safe minimum and maximum airspeed limits for various performance conditions. Refer to NATOPS for additional information.

b. **Use and Limitations**. The airspeed indicator is the nose attitude crosscheck instrument in all climbs and descents and a performance instrument in level flight. It will give you an indirect indication of nose attitude with a constant power setting. For any particular power setting, there is only one nose attitude that will hold altitude and airspeed constant for any momentary weight. The airspeed is controlled by power during level flight and by nose attitude during a climb or descent. Since the airspeed indicator is a pitot–static instrument, there is a slight lag (2–3 knots) when accelerating or decelerating. Realize also that the airspeed indicator lags behind nose movement in climbs and descents, so when correcting for airspeed in a climb or descent, reference the gyro for miniature aircraft nose movement and allow sufficient time for the airspeed to react prior to initiating another nose attitude correction.

Figure 1–5 Airspeed Indicator

6. **Radio Magnetic Indicator**

a. The Radio Magnetic Indicator (RMI) (Figure 1–6) is a system containing a north–seeking element stabilized by a gyro wheel. It incorporates the features of a magnetic compass in that it indicates the magnetic heading of the aircraft. However, the erratic nature of the magnetic compass is overcome by the stabilization of the gyro. Contrary to the operation of the other instruments on the panel, the RMI rotates about its center and the pointers remain fixed. The face, or "compass card," is calibrated in degrees. The instrument may be used as a directional gyro when the magnetic influence is cut out of the system. Alternating current (AC) is required for the operation of the RMI. A complete description of this system can be found in NATOPS.

b. **Use and Limitations**. The RMI is the wing attitude crosscheck instrument for both straight and level and straight climbs or descents. For level turns and climbing or descending turns, the RMI is used as a performance instrument. It will give you an indirect indication of wing attitude with the balance ball centered. With the balanced ball out of trim, heading will drift, resulting in the RMI no longer acting as either a wing crosscheck or performance instrument. In attitude instrument flight, it is essential that our instruments portray an accurate indication of the aircraft's attitude. It is imperative the balance ball is centered so that the RMI can provide us with accurate attitude information.

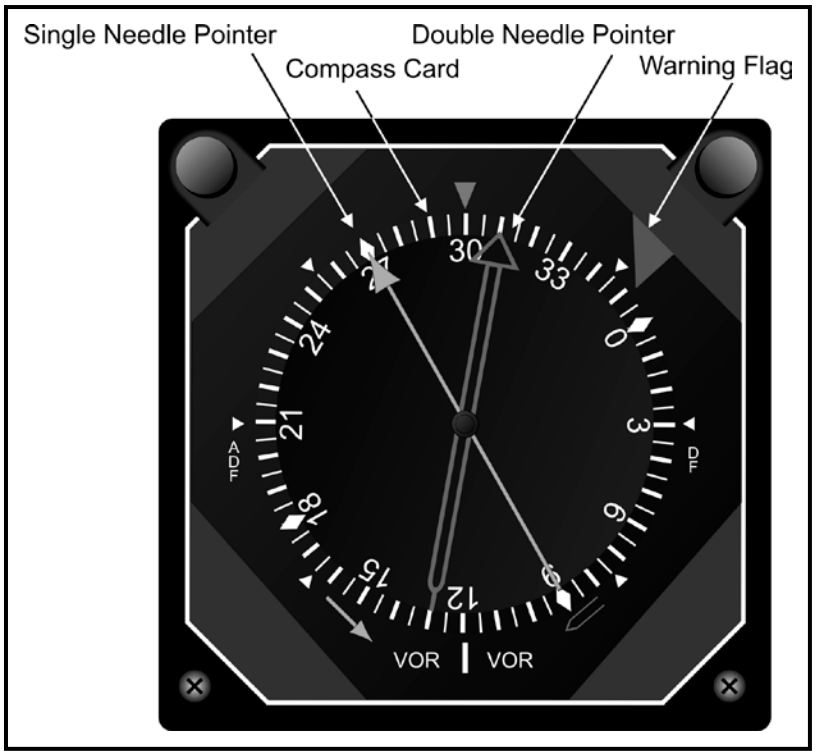

Figure 1–6 Radio Magnetic Indicator

7. **Turn Indicator and Balance Ball**

a. A complete description of this instrument can be found in NATOPS. In a practical aerodynamic sense, the balance ball indicator (Figure 1–7) shows directly and immediately the longitudinal alignment of the aircraft, nose to tail. This information enables the pilot to detect and eliminate aircraft yaw by trimming the ball to the center of the inclinometer (while holding the aircraft attitude constant on the attitude gyro), thus maintaining balanced flight.

b. **Use and Limitations**. The turn needle (Figure 1–7) is a wing attitude crosscheck instrument in constant–rate turns. The needle is calibrated for a four–minute turn; that is, if the aircraft is in a turn with one needle–width deflection, it will take four minutes for the aircraft to turn 360º. This means that a one–needle–width deflection of the needle yields a turn of approximately 1½º per second. If a two–needle–width deflection is maintained, the aircraft will turn twice as fast, or at 3º per second. At any given airspeed, a specific angle of bank (AOB) may be set on the gyro, which will give an exact needle–width deflection if in balanced flight (ball centered). If in unbalanced flight, we would have difficulty coordinating the gyro attitude and turn indicator for a specific turning rate.

Similarly, if the wings were level and the ball displaced, a yaw (turn) develops in a direction opposite from the displaced ball, adversely affecting heading control.

c. If the ball is displaced to the right or left, which will occur when a slip or skid takes place, it indicates unbalanced flight. This condition may be corrected by application of rudder pedal pressure on the side to which the ball is displaced. When the ball is again centered, use rudder trim to relieve control pressure. During the trimming operation, the pilot must ensure the attitude is controlled by observing the miniature airplane on the gyro. If the attitude (nose and wing) is not held constant during the rudder trimming operation, the aircraft nose will yaw as rudder pressure and/or trim is applied and the wings will attempt to roll in the direction of the yawing moment. Therefore, the pilot should trim the balance ball only when stabilizing the nose and wing attitude on the gyro. Finally, check the ball position and repeat the trimming steps if necessary.

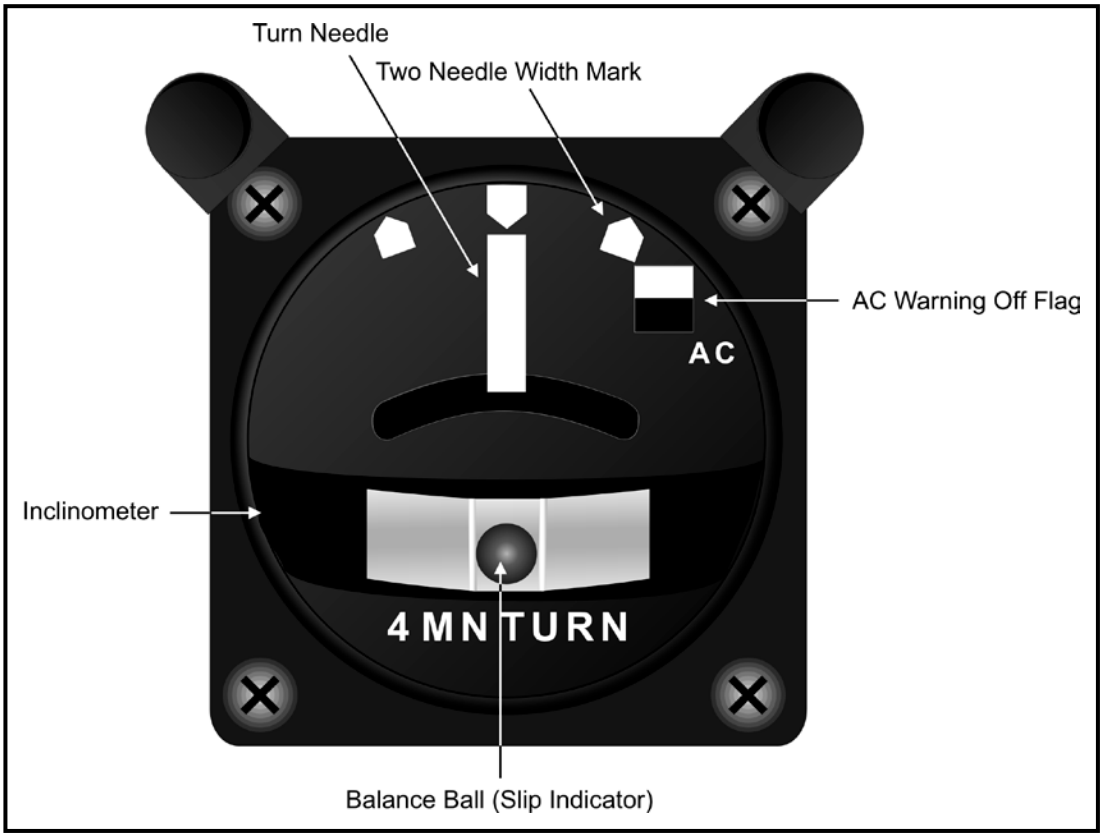

Figure 1–7 Turn Indicator & Balance Ball

105. FUNCTIONAL SCAN ITEMS

Functional scan items consist of engine instruments, gear and flap indicators, radios, navigation equipment, fuel and oxygen gauges, magnetic compass, and/or any other item that requires attention during flight. Because of its significance in the event of an RMI failure, the magnetic (wet) compass is described.

1. **Magnetic Compass**

   a. The magnetic compass (Figure 1–8) is an instrument containing a north–seeking element, which, within its limitations of error, indicates the magnetic heading of the aircraft. The instrument consists of a pair of parallel magnetic bars around which is mounted a calibrated compass card. The bars align themselves with the magnetic lines of force around the earth, and heading is read off the card under a fixed reference called a "lubberline." Refer to NATOPS for additional information.

   b. **Use and Limitations**. This instrument has a pronounced turning and pitching error during any change of attitude. These errors appear as tendencies for the compass card to "lag" or "lead" the aircraft heading during the turn and to swing unpredictably in turbulent air. Only when the airplane is in straight and level, balanced flight in

relatively smooth air, can you rely on the indication of this compass. In extreme latitudes near the magnetic poles, the instrument oscillates and swings unpredictably, and without proper correction, is useless for heading indications. Under certain conditions, the magnetic compass will indicate accurately in attitudes other than straight and level flight. These instances are:

i. When turning through a heading of east or west with the AOB less than 18º.

ii. When accelerating or decelerating, climbing or descending at a pitch angle of not more than 18º, on a heading of north or south.

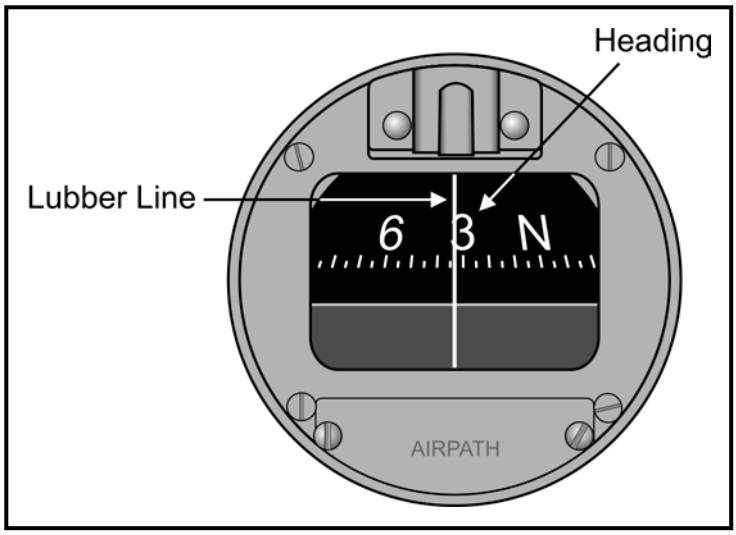

Figure 1–8 Magnetic Compass

c. The magnetic compass has certain characteristic errors which can be predicted and should be understood to prevent disorientation. The amount and direction of error or deviation while in a turn will depend on the latitude, north or south. The following rules are presented as supplementary information and will not be applied in the aircraft during basic instruments (BI). The general rules for the amount and direction of error in the local flying area are as follows:

i. When turning through a heading of north, the magnetic compass will lag about 30º behind the actual heading of the aircraft.

ii. When turning through a heading of south, the magnetic compass will lead the actual heading of the aircraft by about 30º.

iii. When accelerating or climbing on a heading of east or west, the magnetic compass will deflect toward a heading of north.

iv. When decelerating or descending on a heading of east or west, the magnetic compass will deflect toward the south.

106. BASIC INSTRUMENT TERMS

Normal Cruise	– 150 KIAS – Approximately 650–700 ft–lbs torque – Nose Attitude: approximately 0º
Slow Cruise	– 120 KIAS – Approximately 450–500 ft–lbs torque – Nose Attitude: approximately 1½º nose up
Vertical Performance Speed (VPS)	– 130 KIAS – Approximately 550 ft–lbs torque – Nose Attitude: approximately 1º nose up
Basic Approach Configuration (BAC)	– 120 KIAS, gear down, flaps up – Approximately 700–750 ft–lbs torque (Below 10,000 feet approximately 650–700 ft–lbs) – Nose Attitude: approximately 2º nose up
Final Approach Configuration (FAC)	– 100 KIAS, gear down, flaps down – Approximately 700–750 ft–lbs torque – Nose Attitude: approximately 0º
Standard–Rate Turn	– 3º per second – AOB approximately 20% of the KIAS – Two–needle width (balanced flight)
One–half Standard–Rate Turn	– 1½º per second – AOB approximately 10% of the KIAS – One needle width (balanced flight)
Constant–Rate Climb or Descent	1000 FPM
Standard–Rate Climb or Descent	500 FPM

THIS PAGE INTENTIONALLY LEFT BLANK

CHAPTER TWO
BASIC INSTRUMENTS GENERAL PROCEDURES

200. INTRODUCTION

This section discusses and explains the fundamental flight maneuvers upon which all basic instrument flying tasks and techniques are based. In learning to fly instruments, as in any learning process, the fundamentals must be mastered before more coordinated maneuvers can be learned.

201. INSTRUMENT SCAN

Good instrument flight is attained by smooth "attitude control." Attitude control is attained by visualizing and setting a desired power and attitude combination while studying and controlling the miniature aircraft attitude on the attitude gyro, trimming the new attitude, and confirming this attitude by scanning attitude crosscheck instruments. Once attitude control is mastered, setting power and attitude to achieve exact performance attains professional instrument flight.

1. **Setting an Attitude**

   a. All attitude changes must be accomplished on the attitude gyro. This means if a new attitude is desired, an aviator must "go" completely to the gyro and "set" the attitude, then remain focused on the gyro long enough to trim the new attitude to ensure that the aircraft will remain in its new position. The common error is to move the scan too rapidly to a crosscheck instrument before an attitude is actually "set." As a result of this scan shift, the gyro (and aircraft) moving while the crosscheck instrument is being "scanned." As an example, consider rolling out of a turn. An aviator sees his heading approaching on the RMI, initiates his/her roll on the gyro to wings level, but his/her eyes leave the gyro before he/she sets wings level in order to check the heading. As a result, the aircraft continues to roll in the opposite direction and will not maintain heading; also, the nose probably leaves the desired attitude. Avoid this frustration by simply following a basic rule. Set the new attitude by stopping the wings and nose in the desired positions with the stick, trimming if necessary. After stabilizing the gyro, then crosscheck other instruments. Remember, all the other instruments "lag" behind gyro movement, so use that "lag" time to your advantage for setting the gyro attitude.

   b. **The P.A.T. PRINCIPLE**. In most transitions from level flight, we will have to reset power, attitude and retrim for our new attitude. The mechanics of transitions will be performed in a specific sequence:

      i. **P**OWER

      ii. **A**TTITUDE

      iii. **T**RIM

Although power and attitude changes are almost simultaneous, we will lead with PCL movement, then set the new attitude as we continue the PCL to desired power range. After the power and attitude are set, trim.

2. **Trim**

From aerodynamics courses, we have learned that if we have our aircraft trimmed for balanced flight and change power or airspeed, we need a trim change. In this section, we will review the type of trim needed and how to trim, vice the aerodynamic reason for trim.

a. **Basic Trim Requirements**

Basic Maneuver	Trim Required
Power addition	Right rudder/down elevator
Power reduction	Left rudder/up elevator
Acceleration	Left rudder/down elevator
Deceleration	Right rudder/up elevator

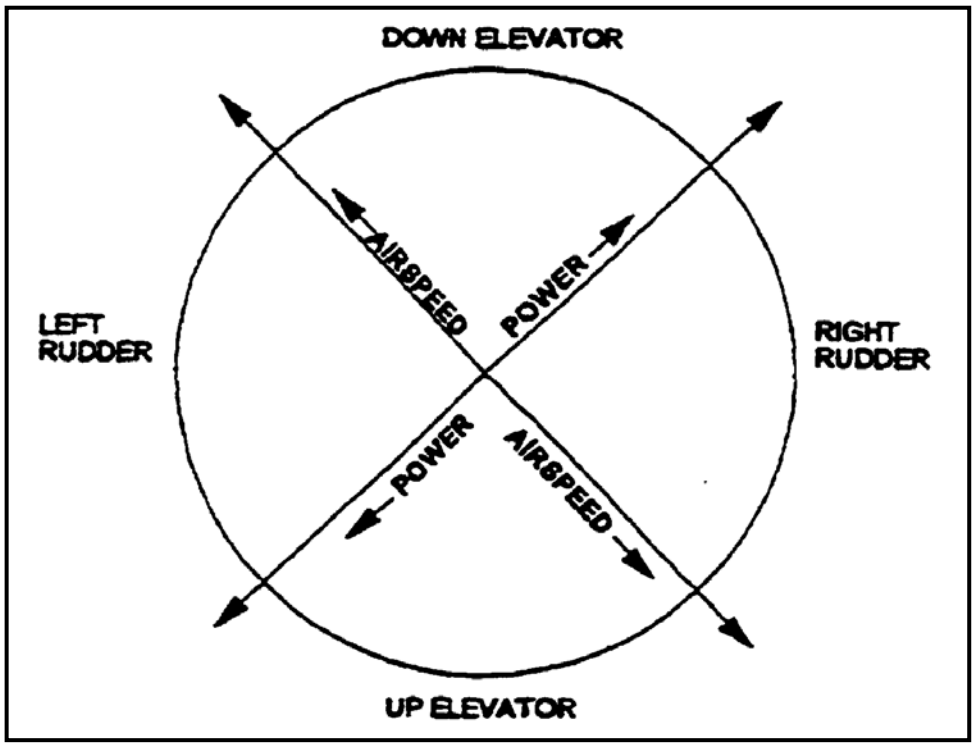

Figure 2–1 Trim Requirements

b. **Trim requirements with a change in attitude**

i. **Transition to a Basic Climb.** Starting from normal cruise, you transition by adding power and raising the nose to slightly above the climbing attitude (12–15 degrees) allowing the airspeed to decelerate to climb airspeed. As you approach 120 KIAS, reset the nose attitude (6–8 degrees). The initial nose down trim for power addition is negated by raising the nose to slightly above the climbing attitude. Thus, trim is right rudder, up elevator to hold the new attitude during deceleration.

ii. **Level off from a Basic Climb.** Two hundred feet prior to level off altitude, lower the nose toward the horizon and accelerate toward normal cruise while maintaining a shallow climb.

(a) Trim left rudder and down elevator as the aircraft accelerates.

(b) Approaching assigned altitude, lower nose to the level flight attitude. Two to three KIAS prior to 150 KIAS, reduce PCL to cruise power setting and retrim.

iii. **Transition to a Descent.** Using the P.A.T. principle, reduce power and lower the nose. Airspeed will remain the same as it was before the descent.

(a) Trim is left rudder for power reduction.

(b) Up elevator trim is required to hold the new attitude.

iv. **Level off from a Descent.** Using the P.A.T. principle, 100 feet prior to the desired level off altitude, add power to normal cruise power setting, and raise the nose to the level flight attitude and retrim.

(a) Trim is right rudder for power addition.

(b) Down elevator is required to hold the new attitude.

Further trim examples are discussed in sections dealing with specific maneuvers. Changes in power, airspeed, and attitudes will require trim combinations as in the following example:

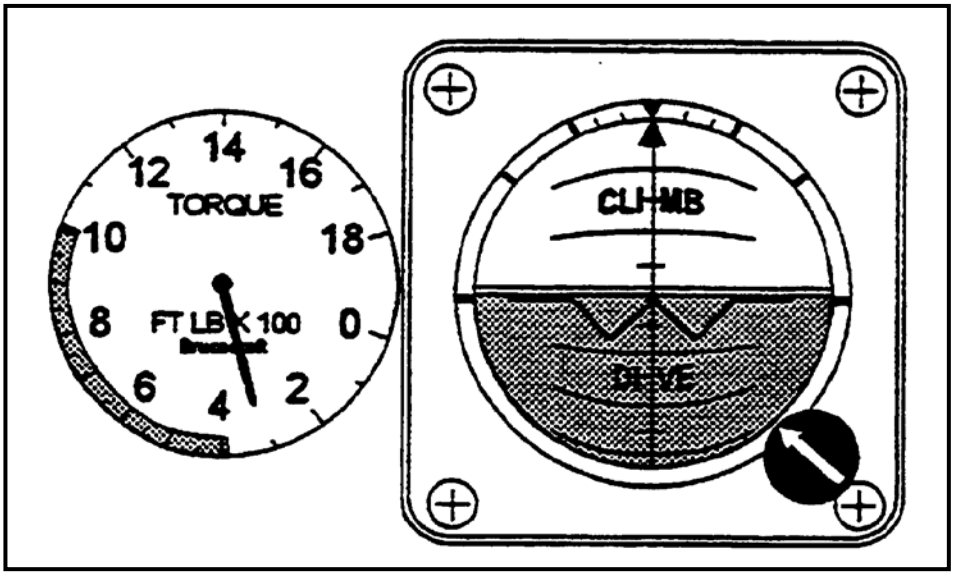

Figure 2-2 Trim Gyro

Looking at the gyro, reduce torque toward 300 ft-lbs; use peripheral vision to set power range.

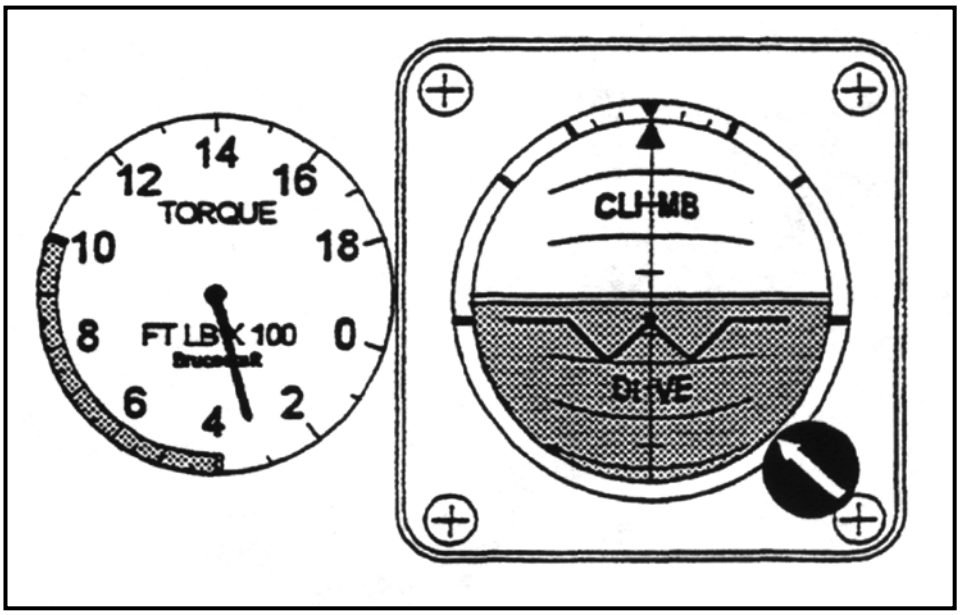

Figure 2-3 Trim Gyro

As power continues toward 300 ft-lbs, lower the nose.

2-4 BASIC INSTRUMENTS GENERAL PROCEDURES

Continue lowering the nose to set the attitude of 2° down and trim left rudder, nose up. When stable, reset P.A.T. and continue to scan for wings level descent.

c. **How to Trim**. The generally accepted sequence for trimming the aircraft is: rudder, elevator, and aileron. The rudder trim is usually initiated first because it seems difficult for most pilots to hold the ball centered with rudder for an extended period and secondly, yaw affects both nose and aileron trim. Thus, if rudder were trimmed last, both nose and aileron would have to be retrimmed to some extent.

To trim, first set a maneuvering attitude on the gyro and center the ball using light pressures on the controls. Use peripheral vision to note ball centered. Note the pressures needed to hold this new balanced attitude and move the trim tabs smoothly until the pressures are removed. Relax hand and foot pressure on controls to see if the attitude remains. Do not let go of the stick; simply relax. If the aircraft needs further "fine" trimming, you will feel the attitude wanting to change and can then trim out the final pressures. Note that most students tend to undertrim and move tabs too slowly. Do not be afraid of overtrimming slightly. Fine or final trim will also correct that.

This trimming sequence will take much less time than it does to read about it and it is the key to precision flight.

3. **Confirming Attitude with Crosscheck Scan**

Once we have established an attitude and trimmed it, we must crosscheck it with the proper instruments to verify correct attitude.

Aircraft instruments are not absolutely accurate. The attitude gyro is subject to precessional errors in turns and accelerations and must be crosschecked with other instruments. In addition, the small size of the gyro makes it difficult to see small changes in attitude.

To explain the scan sequence, we shall use an analogy. Compare attitude flying with the tuning of an old car radio. We set an initial attitude on the gyro just as we set the desired frequency with the station selector buttons. Neither is necessarily perfect, so we crosscheck the attitude with other instruments, just as we would dial back and forth across a frequency range for best reception. Then we "fine tune" by checking performance in the aircraft, for example, a little more power for airspeed in straight and level. Just as we would adjust volume prior to receiving the best signal, it is likewise useless to check performance instruments prior to establishing and crosschecking an attitude.

202. SCAN PATTERNS

In order to determine the aircraft’s attitude quickly and effectively, you must know what instruments to scan for a particular maneuver. The following section lists the correct instruments or scan "pattern" for every situation. It is mandatory that the student commits these patterns to memory.

As stated in the section concerning trim, the ball is centered using peripheral vision during any transition on the gyro. Thus, consider the ball as part of the attitude scan during the initial transition. From then on, it is scanned with the turn needle.

1. **Straight and Level Flight**

To maintain straight and level flight, we shall be most concerned with those instruments that will aid us in maintaining constant–heading, constant–altitude flight. Our primary attitude instrument for both nose and wing position is the attitude gyro, which gives us the most direct indication of our attitude in relation to the horizon. Since the gyro suffers from precessional errors, it is of extreme importance to use other attitude instruments as crosschecks for our gyro. Since straight and level flight maintains a constant heading, we shall utilize the RMI as a wing position crosscheck instrument; in other words, any deviation from a constant heading on the RMI will indicate our wings are not in the level attitude, provided the aircraft is in balanced flight.

Our nose position crosscheck in straight and level flight consists of using the altimeter in conjunction with the vertical–speed indicator. Any change in constant–altitude flight will be indicated initially by a movement on the altimeter and vertical–speed indicator. Our performance instrument will be the airspeed indicator, showing us the result of our attitude plus the power applied. (Additional scan instruments are the balance ball for balanced flight and the turn needle.)

2. **Level Turn**

The level turn scan is similar to the straight and level scan in that the nose attitude is maintained on the attitude gyro and crosschecked with the altimeter and vertical–speed indicator. Wing attitude is maintained on the gyro for constant AOB turns.

If a constant–rate turn is desired, the turn needle is utilized as the wing position crosscheck. Performance scan in a constant–rate turn also includes the RMI and clock to check the rate of turn. The ball is a peripheral attitude instrument when rolling into the turn on the gyro and then scanned with the turn needle throughout the maneuver.

3. **Straight Climbs and Descents**

During climbs and descents on a constant heading, our primary indicator for nose and wing position is the attitude gyro. The wing position is crosschecked on the RMI and the nose attitude is crosschecked on the airspeed indicator. During constant–rate climbs and descents, we also check the performance with the altimeter and clock. The vertical–speed indicator may be used to crosscheck the rate of climb or descent. The additional scan includes the turn needle and balance ball.

4. **Climbing or Descending Turns**

The primary attitude instrument for nose and wing position is the attitude gyro. Nose attitude is crosschecked on the airspeed indicator and wing attitude is crosschecked on the AOB indexer (ABI). If climbing or descending at a constant rate while in a constant–rate turn, the performance must be checked by comparing the altimeter and RMI against the clock. In the four basic scan patterns discussed, there is a scan for every performance in normal flight conditions.

5. **Scan Summary**

Scan is the selective and systematic visual interpretation of attitude and maneuver performance crosscheck instruments, designed to provide the instrument pilot with an essentially real–time awareness of the aircraft attitude. Effective scan is accomplished in a planned rhythmic sequence for each of the major flight maneuvers.

a. All normal aircraft instrument flight maneuvers may be reduced to the following four general categories:

   i. Straight and level.

   ii. Straight climb or descent.

   iii. Level turn, constant AOB or rated turn.

   iv. Climbing or descending turns.

b. **Efficient Scan Patterns.** The following guidelines will form the basis for the development of effective, efficient scan patterns.

   i. When scanning nose or wing position crosscheck instruments, as well as performance or additional scan instruments, always recheck the attitude gyro for proper attitude indication before moving onto the next crosscheck instrument. This will keep your scan centered around the attitude gyro, which is the primary reference for both nose and wing position.

   ii. Always scan the nose crosscheck instrument first after establishing and trimming to hold the desired attitude on the attitude gyro, since nose attitude is most critical. The other crosschecks will confirm wing position and balance of flight.

   iii. Performance instruments must be included in a timely fashion to maintain stability of performance.

iv. The full panel scan pattern can be summarized as follows:

GYRO
NOSE CROSSCHECK
GYRO
WING CROSSCHECK
GYRO
NOSE CROSSCHECK
GYRO
WING CROSSCHECK
GYRO
PERFORMANCE CHECK
GYRO
ADDITIONAL SCAN

Repeat the pattern. Merely substitute the correct instrument into the formula. Note that you should be looking at the attitude gyro at least 50% of the time. Remember that all transitions are conducted while establishing attitude on the attitude gyro.

NOTE

For standard–rate turns: scan gyro, nose crosscheck, gyro, wing crosscheck, gyro, performance check, gyro, additional scan.

BASIC INSTRUMENT FULL PANEL SCAN PATTERNS

STRAIGHT & LEVEL	TURN (NONRATED)	TURN (RATED)	CLIMB/ DESCENT (NONRATED)	CLIMB/ DESCENT (RATED)	TURNING CLIMB/DESCENT (NONRATED)	TURNING CLIMB/ DESCENT (RATED)
P.A.T.	P.A.T.	P.A.T.	P.A.T.	P.A.T.	P.A.T.	P.A.T.
GYRO	GYRO	GYRO	GYRO	GYRO	GYRO	GYRO
ALT	ALT	ALT	A/S	A/S	A/S	A/S
VSI	VSI	VSI	GYRO	GYRO	GYRO	GYRO
GYRO	GYRO	GYRO	RMI	RMI	ABI	T/N
RMI	ABI	T/N	GYRO	GYRO	GYRO	GYRO
GYRO	GYRO	GYRO	A/S	A/S	A/S	A/S
ALT	ALT	A/S	GYRO	GYRO	GYRO	GYRO
VSI	VSI	RMI	RMI	RMI	ABI	T/N
GYRO	GYRO	CLOCK	GYRO	GYRO	GYRO	GYRO
RMI	ABI	GYRO	ALT	ALT	ALT	ALT
GYRO	GYRO	BALL	VSI	VSI	VSI	VSI
A/S	A/S	TQ	GYRO	CLOCK	RMI	GYRO
GYRO	RMI	REPEAT	T/N	GYRO	GYRO	RMI
T/N	GYRO		BALL	T/N	BALL	CLOCK
BALL	BALL		TQ	BALL	TQ	GYRO
TQ	TQ		REPEAT	TQ	REPEAT	BALL
REPEAT	REPEAT			REPEAT		TQ
						REPEAT

PARTIAL PANEL SCAN PATTERNS

STRAIGHT & LEVEL	LEVEL TIMED TURNS	CAC/D
T/N–BALL	T/N–BALL	T/N–BALL
VSI	VSI	A/S
ALT	ALT	T/N–BALL
T/N–BALL	T/N–BALL	A/S
VSI	VSI	T/N–BALL
ALT	ALT	VSI
T/N–BALL	T/N–BALL	ALT
A/S	A/S	T/N–BALL
T/N–BALL	CLOCK	TQ
TQ	T/N–BALL	REPEAT
REPEAT	TQ	
	REPEAT	

203. INSTRUMENT CHECKLIST

Prior to each flight, it is essential that all instruments and equipment be checked for proper operation. Prior to the runup area, the student will have completed the Instrument Checklist below and will report to the instructor, "Instrument Checklist complete, oxygen 100%, blinker operating normally, altimeter error less (or more) than 75 feet. Radios and NAVAIDS tuned and set." Be sure that you check each of the following items:

1. Hood installed and operating properly.

2. Rudder pedals and seat adjusted.

3. Airspeed indicator reading zero.

4. Altimeter set.

5. RMI aligned with magnetic compass.

6. Clock set and running.

7. Attitude gyro erect and adjusted.

8. VSI reading zero.

9. Oxygen equipment checked and blinker operating.

10. Battery switch ON.

11. Inverter switch to #1 inverter.

12. Attitude gyro remains erect in turns.

13. RMI tracking properly in turns.

14. Turn needle indicating turn in proper direction.

15. Balance ball moving freely; liquid damping fluid full.

16. Radios and NAVAIDS turned on and set.

NOTE

The radio test will be the same as that in Contact Stage with one addition. Since you will be using the IND–350 on your BI flights, it is necessary to check this instrument. Accomplish this as follows: While depressing the SYS TEST button, twist the Omni Bearing Selector (OBS) to the same course indicated by the head of the VOR needle. Select VHF Omnidirectional Range (VOR) on the VOR/TACAN switch. The Course Deviation Indicator (CDI) should center within $\pm 4^{o}$ and the TO–FROM indicator should indicate TO. Repeat the procedure for the TACAN.

CAUTION

The instrument hood should not be donned during taxi, takeoff or landings. Both pilots should verify fuel caps secure and gear up and locked prior to donning the instrument hood.

Bring any difficulty in completing the checklist to your instructor's attention at once.

204. INSTRUMENT COMPARISON CHECK

After completion of the Initial Climb to Altitude (ICA), the instructor will take the aircraft and establish it on a base altitude, heading, and normal cruise airspeed (150 KIAS). The student will then read to the instructor the following instrument indications in his/her cockpit:

1. Attitude gyro

2. RMI

3. Airspeed

4. Altimeter

5. VSI

6. Turn Needle/Balance Ball

7. Torque

8. Slave the clock sweep second hand

Deviations in cockpit instrument readings will be taken into account during maneuver evaluations.

NOTE

Once the clocks are slaved, do not reset them for any BI maneuvers.

205. REAR COCKPIT BAILOUT

Refer to T–34C NATOPS. In the case of any actual emergency, immediately stow the instrument hood.

206. NIGHT PREFLIGHT

Flight equipment as prescribed by NATOPS and local SOP will be worn or carried on all night flights. Additionally, an operating flashlight and a clear visor will be included as part of the required equipment. A preflight inspection will be conducted prior to each night flight in accordance with NATOPS. A white lens flashlight will be used to conduct the preflight during darkness. All exterior and cockpit lights will be checked during the preflight.

207. REAR COCKPIT LIGHTING

Refer to T–34C NATOPS.

208. USE OF OXYGEN

Refer to T–34C NATOPS for oxygen system description and use. Prior to every instrument flight, a thorough preflight of the oxygen system and your mask will be conducted. Your instructor will show you how to properly adjust the mask and connect the Inter Communication System/Ultra High Frequency (ICS/UHF) radio cords. Since BI flights are conducted above 10,000 feet, improper use or a malfunction of the oxygen system could result in hypoxia or hyperventilation.

1. **Hypoxia**

A reduction in the level of oxygen available to the body and its cells causes the physiological condition of hypoxia. If the pilot is physically fit and there are no fumes in the cockpit, this condition will probably never occur below 10,000 feet. Mechanically, it can be caused by a leaking oxygen system, an inoperative mask, or a faulty regulator. Although no two individuals are identical in objectively recognizable symptoms, the onset of hypoxia may be seen as a noticeable pale and blue tinge (cyanosis) of the fingernail beds and face, numbness, tingling sensations, and/or a feeling of euphoria. Hypoxia may also cause hyperventilation.

2. **Hyperventilation**

Hyperventilation is simply breathing too quickly, too deeply, or both. It can occur at any altitude, with or without a supply of supplemental oxygen. Hyperventilation results from exhaling too rapidly, thus upsetting the carbon dioxide balance in the blood. It is most likely to occur in stress situations that tend to produce anxiety and/or apprehension. The first symptoms may be a tingling in the fingers and toes that will get progressively worse until spasms occur in these areas. If no preventive action is taken, these symptoms will be followed by extreme tensing of all muscles, soon followed by a temporary loss of consciousness. It is not unusual for hypoxia to result in hyperventilation. The symptoms of hypoxia and hyperventilation are very similar, and the treatment for both conditions is the same.

a. Select emergency position with the diluter lever.

b. Inform your instructor.

c. Slow breathing rate by counting to four or five between breaths.

d. Descend to 10,000 feet or below.

e. Check oxygen equipment.

209. INSTRUMENT, GAS, OXYGEN REPORT (IGO)

This report will be performed at least every 20 minutes (preferably after each maneuver) during all flights. This report is the same as in the Contact Stage with the exception of the position report which is replaced by reporting oxygen pressure and blinker operation.

210. ASSUMING CONTROL OF THE AIRCRAFT

When assuming control of the aircraft on dual flights, utilize the same procedures as in Contact Stage. In the event of suspected ICS failure, stow the instrument hood so visual communication can be established.

211. EMERGENCY PROCEDURES

During the brief your instructor will ask you about specific Emergency Procedures. These are listed for each flight in the Multi-Service Pilot Training System (MPTS). Just as in Contact Stage, you are responsible for knowing the procedures for each flight. The NATOPS Manual and the NATOPS Pocket Checklist have all of the procedures listed.

CHAPTER THREE
BASIC INSTRUMENTS FLIGHT PROCEDURES

300. INTRODUCTION

The Basic Instrument Procedures and Patterns are intended to provide the student with a sound basis for progressing to Radio Instrument navigation. The ability of the naval aviator to perform proper instrument flight will transform periods of bad weather and low visibility from a liability to an asset for the successful completion of military missions, especially when used in combination with radio, radar, and target recognition devices.

301. INITIAL CLIMB TO ALTITUDE (ICA)

1. The initial climb to altitude (ICA) incorporates fundamental airwork into a sequence in which the pilot is faced with continuous changes of altitude and heading, while maintaining a constant airspeed. The ICA will be performed between assigned reversal headings and level off altitude.

2. Your instructor will make the field departure and climbout in accordance with course rules. Once level at the base altitude, he/she will maintain straight and level flight in normal cruise (150 KIAS). If not previously assigned, the instructor will assign reversal headings and the level off altitude. When directed, position the instrument hood and commence the ICA as follows:

a. Switch oxygen white lever and report, "O_2 normal."

b. Add power to 1015 ft–lbs torque and monitor Inter Turbine Temperature (ITT).

c. Raise the nose slightly above the climbing attitude to 12–15 degrees nose up. Trim right rudder, nose up as the airspeed decreases.

d. As the airspeed approaches climb airspeed (120 KIAS), readjust the nose to the climbing attitude (approximately 6–8 degrees nose up) and retrim.

e. Once established at 120 KIAS, start the turns by rolling into an AOB on the attitude gyro equal to 10% of the airspeed (120 KIAS = 12º AOB). Once the attitude is set on the gyro, commence wing position crosscheck on the turn needle for an exact one needle width turn and a nose position crosscheck on the airspeed indicator for 120 KIAS.

f. Continue turns between assigned headings by making a smooth reversal from one turn into another. Lead reversals by one–third the AOB, trimming the aircraft as necessary.

g. When within 200 feet of the assigned level off altitude, stop the turns on a heading specified by the instructor and begin the level off by smoothly lowering the nose towards the level flight attitude (about halfway towards the horizon) in order to both accelerate and climb in the last 200 feet. Trim left rudder, nose down as the aircraft

accelerates. Upon reaching the desired level off altitude, continue to trim left rudder nose down, and allow the aircraft to accelerate towards normal cruise airspeed while maintaining altitude. Two to three KIAS prior to 150 KIAS, smoothly reduce power to 650–700 ft–lbs and retrim the aircraft to maintain level flight.

3. **Common Errors**

a. Not trimming right rudder, nose up for slowing airspeed.

b. Not switching to normal oxygen.

c. Initiating turns prior to establishing aircraft in a climb.

d. Not trimming throughout the ICA.

e. Not coordinating right rudder with initial power application, resulting in poor heading control.

f. Raising the nose in reversals. The nose of the aircraft tends to pitch up as the wings roll through the wings level attitude–forward pressure is necessary to maintain the same nose attitude during reversals (if properly trimmed).

g. Overcorrecting for airspeed using abrupt nose attitude changes.

h. Attempting to correct for AOB using the bank index as a turn needle and rolling in the wrong direction. Make bank corrections by initiating roll on the miniature aircraft and then check the bank index.

i. Insufficient acceleration trim on level off, resulting in climbing past your altitude.

302. STRAIGHT AND LEVEL FLIGHT (S&L)

Straight and level flight is a condition in which the aircraft is flown in balanced flight holding a constant altitude and heading. The T–34C can be flown in straight and level flight at varying airspeeds. During the Basic Instrument Stage, the most common condition, known as normal cruise, is 150 KIAS.

1. Your instructor will introduce straight and level flight at normal cruise. As you gain experience, you will be able to maintain the straight and level attitude of the aircraft while in instrument flight. At first, however, keeping the aircraft in the straight and level flight attitude will be a matter of conscientious control adjustment.

2. For straight and level flight, it is necessary that airspeed, heading, and altitude be maintained. Again, the power primarily controls the airspeed while maintaining altitude. Reducing power will cause the airspeed to slow; increasing power will cause the airspeed to increase. While maintaining a constant power setting, however, lowering the nose will cause the airspeed to increase and raising the nose will cause the airspeed to decrease with a respective loss

or gain in altitude. It is important in maintaining straight and level flight based on airspeed to set the correct level flight attitude and support it with the proper scan pattern. For instrument flight, the attitude gyro is the basic attitude indicator for nose and wing position. The nose position is crosschecked with the altimeter and vertical speed indicator, and the wing position is crosschecked with the RMI. The airspeed indicator is the performance instrument. The attitude gyro should be adjusted so that the miniature airplane is superimposed on the horizon bar (for normal cruise only). Since the greatest percentage of flight time is straight and level flying, the correction techniques discussed here are extremely important. All attitude adjustments to correct for errors noted on the attitude crosscheck instruments should be made on the attitude gyro. Whenever an error in either heading or altitude is noted, first stop the error and stabilize, then correct back to proper heading or altitude.

a. A correction to return to a desired heading should be made by establishing an AOB on the attitude gyro and maintaining it until approaching the particular heading desired. As a rule of thumb, the AOB used for heading correction should not exceed the number of degrees you want to turn. Lead the rollout heading by the "one–third rule," i.e., by the number of degrees equal to one–third the AOB. This lead in rollout will preclude turning beyond the desired heading.

b. Corrections for small deviations from the desired altitude (1000 feet or less) should be made by displacing the nose attitude from the level flight position on the attitude gyro and maintaining it until approaching the correct altitude. Adjust power as necessary to maintain 150 KIAS throughout your correction. The lead necessary to level off without going beyond the desired altitude will depend upon the rate of change in altitude.

Adjustments for heading and altitude should be made as soon as the error is noted so that large corrections will not be necessary. Corrections for large deviations from desired altitude (over 1000 feet): use 120 KIAS normal climb procedures if low, use 150 KIAS normal descent if high. If an error is noted and the aviator immediately tries to correct back, prior to settling down, the tendency is always to overcorrect.

In order to maintain level flight, the pilot must first establish the nose in the level flight position on the gyro, trim to that attitude, and then crosscheck the altimeter and VSI to detect if the aircraft's nose is indeed level (VSI indicating zero) at desired altitude (altimeter). Obviously, both instruments must be used together. For example, when a rate of descent is noted on the VSI, the altimeter is immediately checked to determine if the descent is undesirable (altimeter on altitude or below) or beneficial (above altitude, and thus the VSI shows you to be correcting). The vertical speed indicator is the best and most precise crosscheck instrument in level flight if used properly. Used improperly, when its lagging factor is not taken into consideration, it can lead to extremely erratic nose control as the pilot chases the VSI.

3. **Altitude and Airspeed Corrections.** There are several methods for correcting for a deviation from desired altitude and airspeed or both. These consist of a power correction or a power and attitude correction plus the need for retrimming.

a. **Off airspeed and on altitude**. If your scan notes that altitude is being maintained, but our airspeed is slow or fast, you know a power adjustment is necessary, since power controls airspeed in level flight. Remember, each torque setting given in this manual is a suggested starting point.

b. **On airspeed and off altitude**. If you notice your altimeter reading is 100 feet high, yet the airspeed is correct, you correct to altitude by reducing power, which allows the trim to lower the nose slightly to return to altitude with no increase in airspeed. Once returned to altitude, reset normal cruise power setting and retrim. The new power setting should be slightly less than original setting.

c. **Off altitude and off airspeed**. If your scan detects a fast airspeed and a small loss of altitude or a slow airspeed and a gain in altitude, it is obviously due to improper nose attitude. Stabilize using the attitude gyro, then correct by trading excess airspeed for altitude, followed by a power adjustment as necessary to maintain airspeed and retrim.

4. **Precise Heading Control**. Heading control in straight and level flight consists primarily of maintaining a constant heading, or direction, on the RMI. In order to maintain a constant heading, the aircraft should be trimmed for wings level balanced flight. If a gradual drift of the RMI is detected, level the wings using the attitude gyro to stop the movement of the RMI. Once the drift is stopped, return to heading by using a shallow AOB, never a greater AOB than the number of degrees off heading. For small heading corrections, it is advisable to use a smaller degree of bank than the error noted and rudder in the direction of turn. Use opposite rudder upon rollout.

5. The following illustrations will help you to understand how corrections for deviations are made and what the flight instruments will depict while correcting back to original altitude.

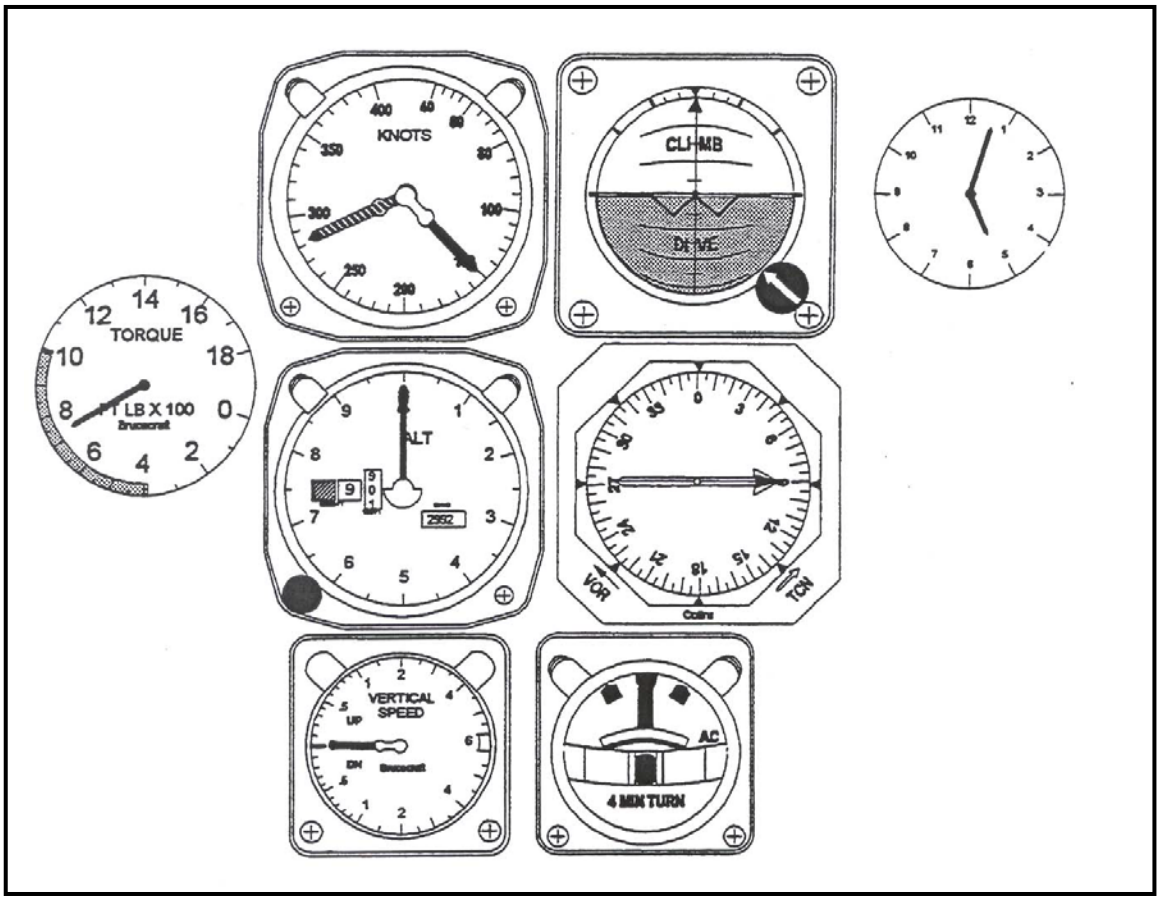

Figure 3–1 Straight and Level Flight: Normal Cruise Instrument Presentation

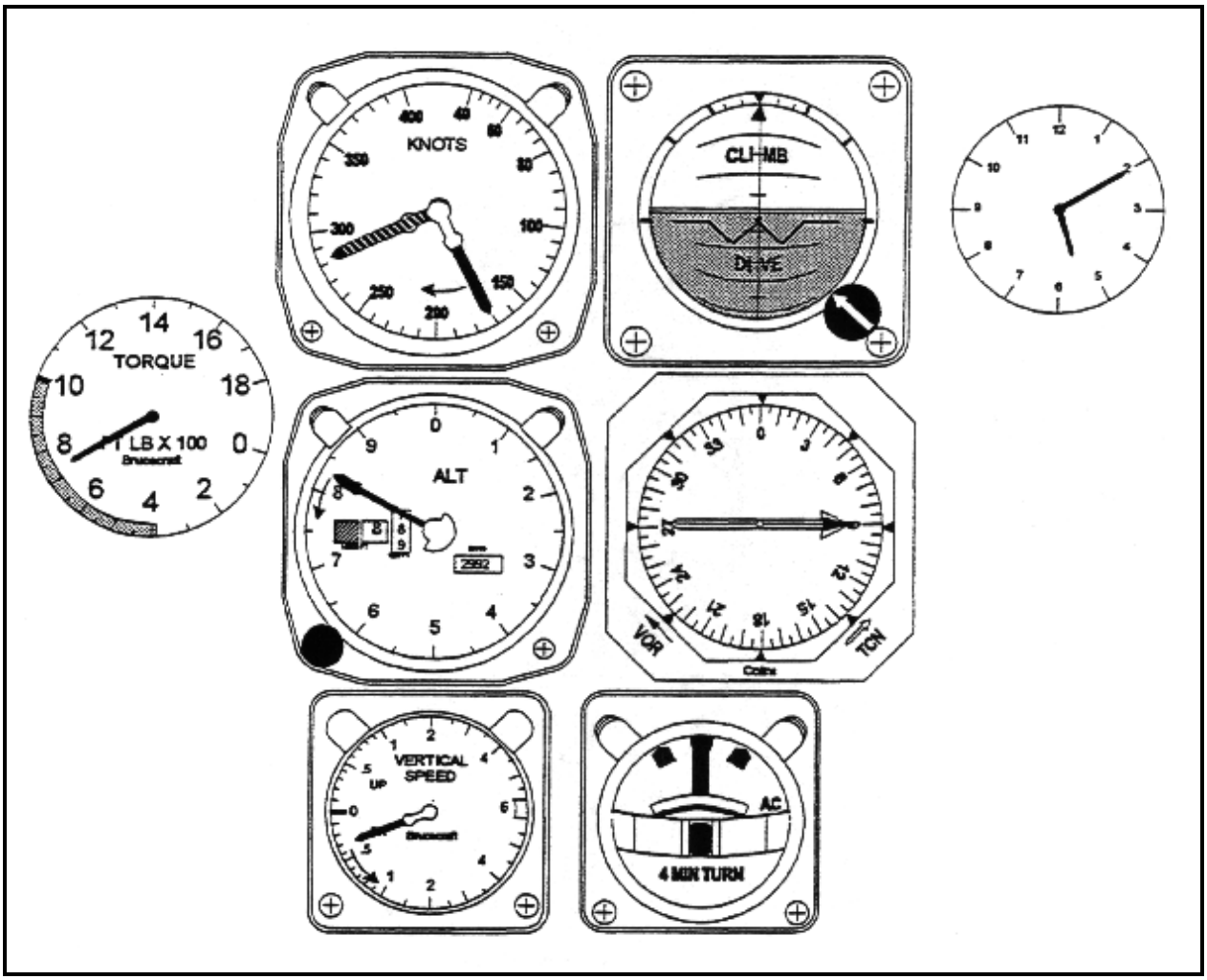

Figure 3–2 OFF Altitude and OFF Airspeed

You will have the following instrument indications:

1. Miniature airplane below horizon bar.
2. Altimeter indicates a descent.
3. Airspeed is increasing.
4. Torque is constant.

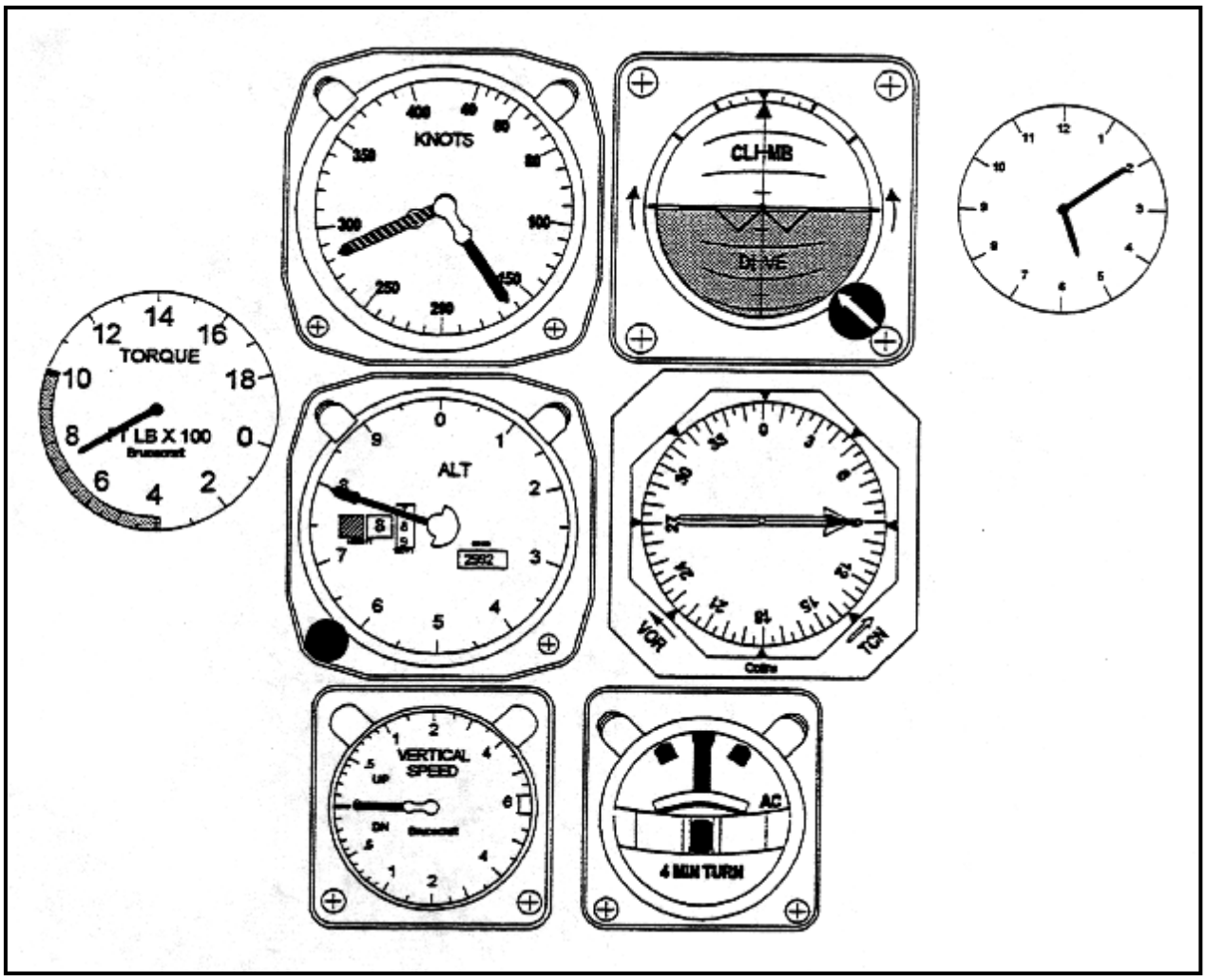

Figure 3–3 OFF Altitude and OFF Airspeed Corrections (1000 Feet or Less)

To correct:

1. Raise the nose of the aircraft on the attitude gyro and place the miniature aircraft on the horizon bar.
2. Check to see if the VSI has stabilized.

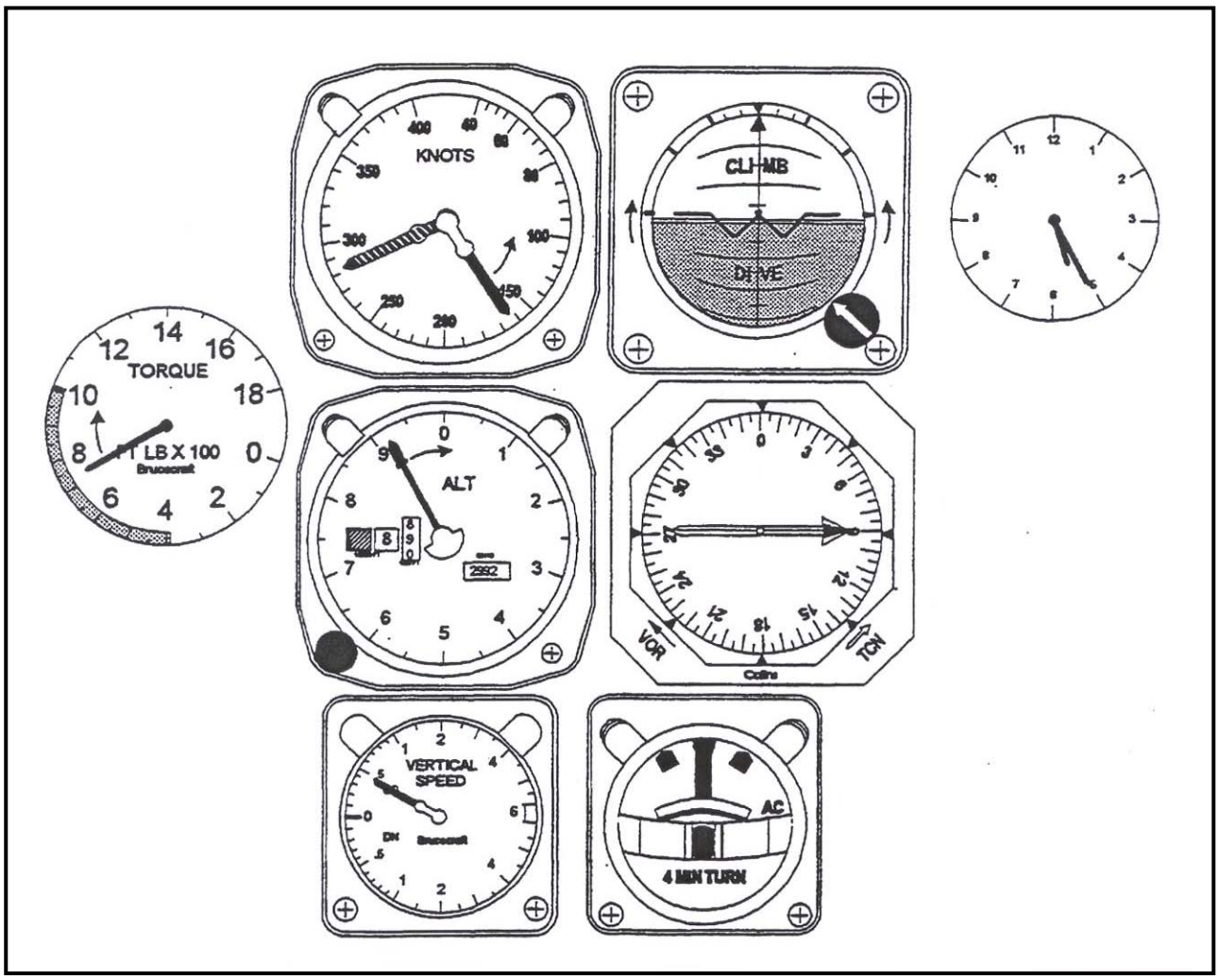

Figure 3–4 Correcting to Original Altitude

3. Next, raise the nose above the level flight attitude and climb back to original altitude.
4. Use power as necessary to maintain 150 KIAS as you climb.
5. As you approach your original altitude, reduce the power to normal cruise and lower the nose to level flight and retrim.

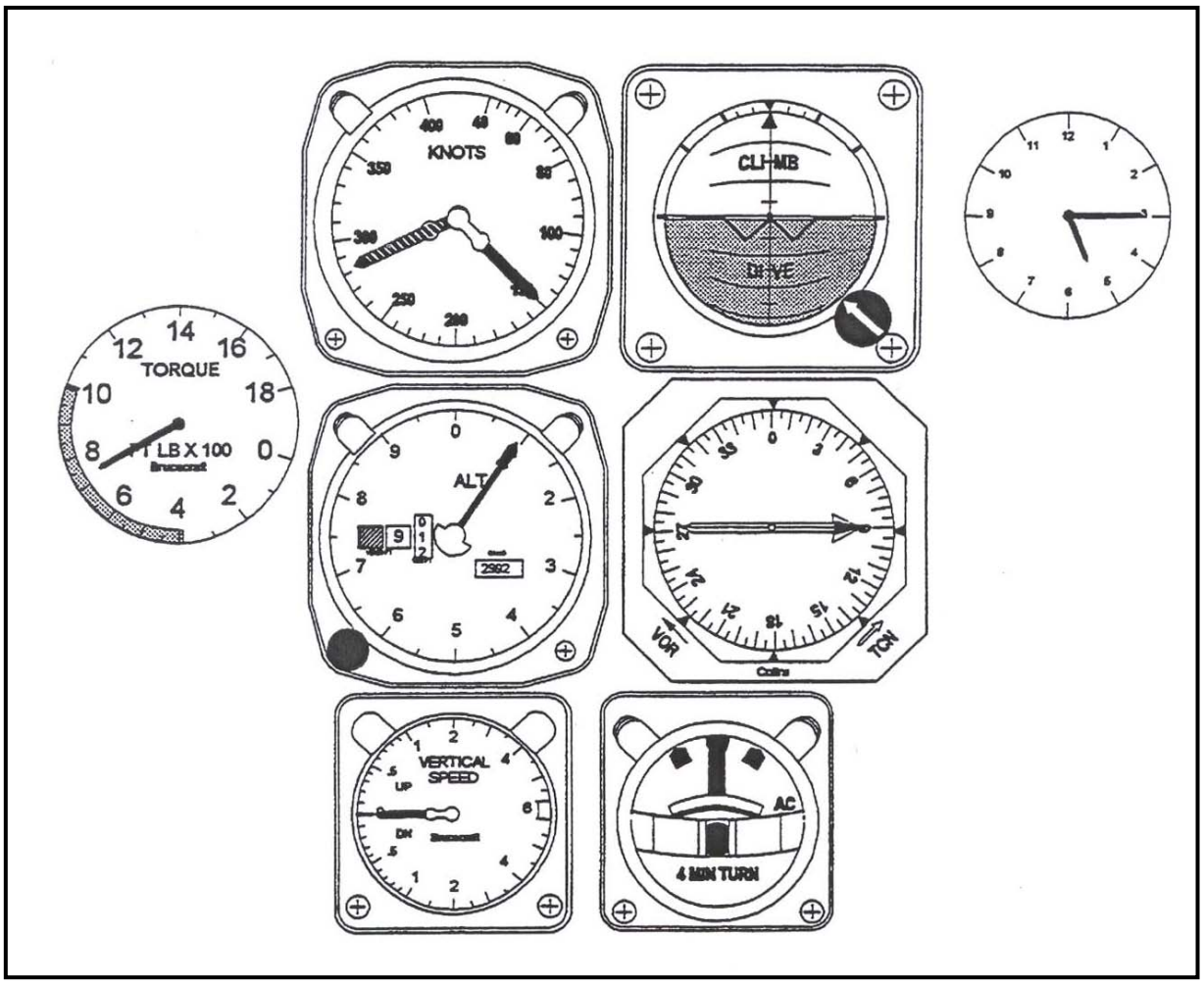

Figure 3–5 ON Airspeed and OFF Altitude

You will have the following instrument indications:

1. Miniature airplane on horizon.
2. Airspeed stable at 150 KIAS.
3. VSI stable, indicating level flight.
4. Power stable.
5. Altimeter reads 100 feet high.

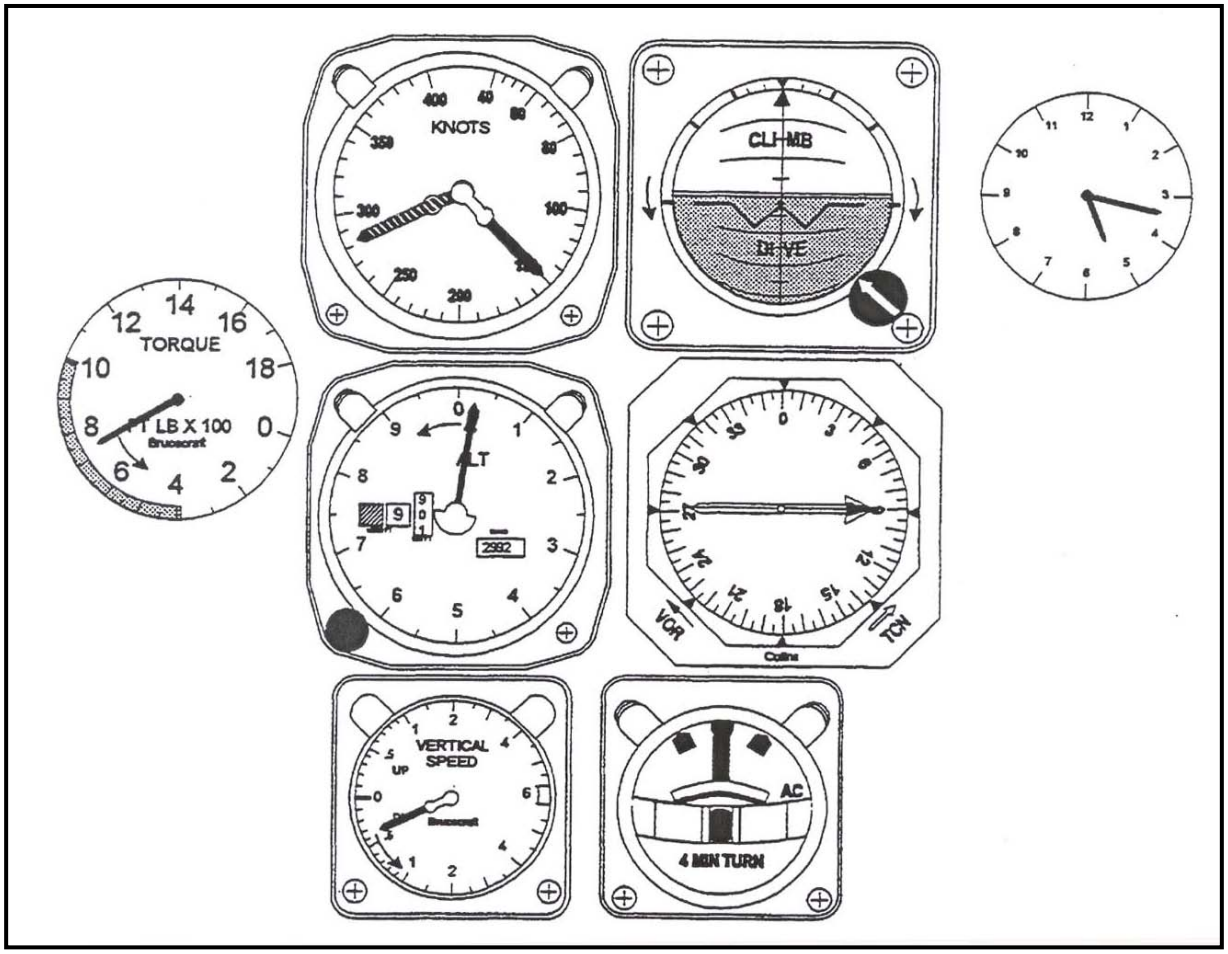

Figure 3–6 ON Airspeed and OFF Altitude

To correct:

1. Reduce power as you lower the nose below the horizon bar.
2. Maintain 150 KIAS.
3. Altimeter and VSI will indicate a descent.
4. Approaching original altitude, use P.A.T. principle to level off and retrim.

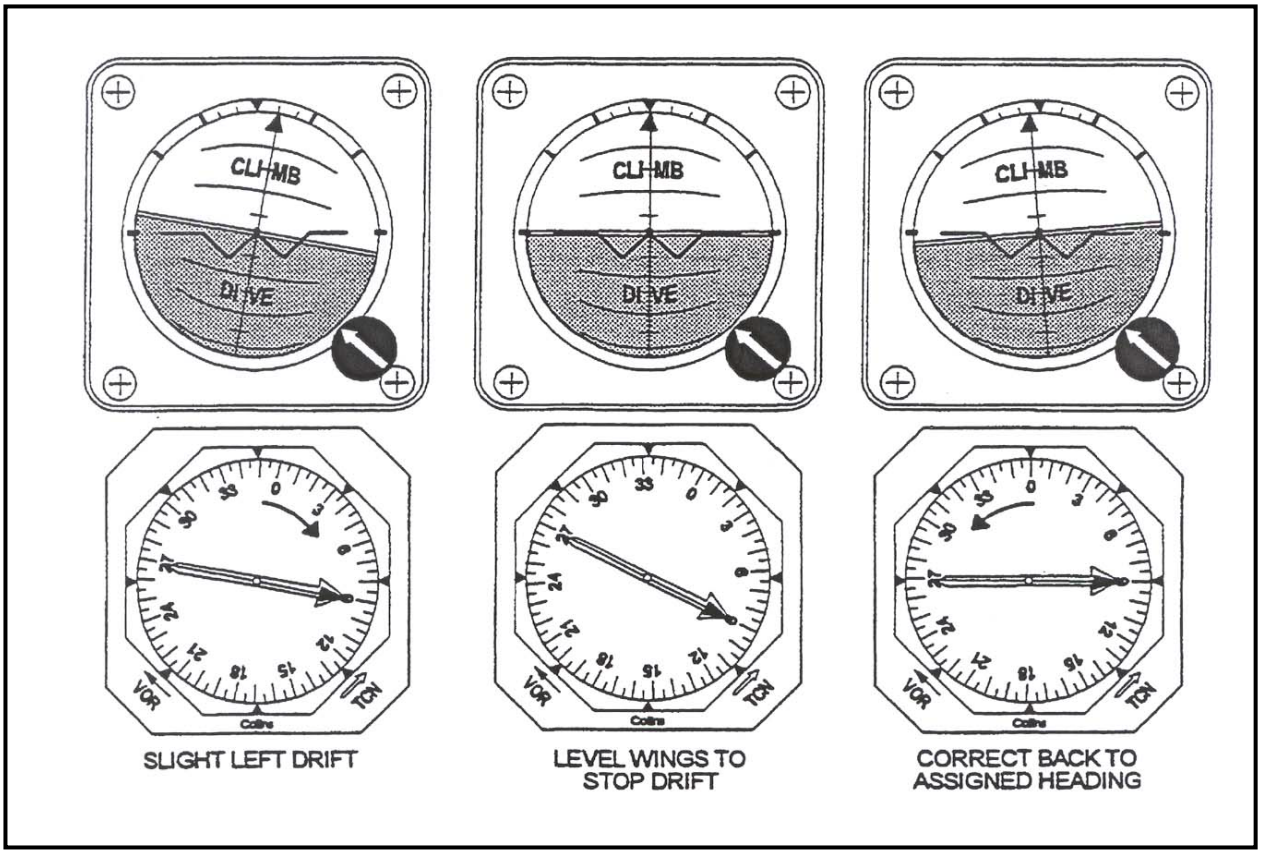

Figure 3–7 Correcting to a Heading

You will have the following instrument indications:

1. Power, altimeter and VSI may be stable.
2. Attitude gyro indicates an AOB.
3. RMI is moving, indicating a turn.

To correct:

1. On the attitude gyro, level wings to stop the turn.
2. Check RMI to ensure the turn has stopped.
3. Roll into a small AOB to correct back to original altitude.
4. Using the one–third rule, roll out on original heading on the attitude gyro.
5. Retrim.

303. CONSTANT ANGLE OF BANK TURNS (CABT)

1. All considerations for turning flight in the Instrument Stage are the same as in Contact Stage.

2. Establish an AOB on the attitude gyro and maintain that AOB throughout the turn. Crosscheck the nose position with the altimeter and VSI. Corrections to maintain altitude are made in the same manner as in straight and level flight.

3. To prevent turning beyond the desired heading, it is necessary to anticipate or lead the new heading. A reasonably accurate rule of thumb is to lead this new heading by the number of degrees equal to one–third the AOB used in making the turn. If, for example, the AOB is 30º, the rollout should be started 10º before reaching the desired heading.

4. In the example above, when you pass 10º prior to your specified heading, shift your scan completely to the attitude gyro and roll out on the gyro. This rule will be used during all turns to specified headings.

5. **Common Errors**

   a. Overrotating the nose as the AOB is established, resulting in a climb. All pilots have a tendency to pull back stick while rolling into a turn.

   b. Looking away from the attitude gyro before the AOB is set, resulting in overbanking as the wings continue to roll.

   c. Failure to maintain a level flight scan as the turn progresses, allowing the nose to fall, resulting in a loss of altitude.

   d. Failure to roll out on the desired heading due to slow or improper scan (not looking at the RMI for turn performance and not applying the "one–third rule").

   e. Not rolling out on the gyro. The most common error is to watch the RMI during rollout. Thus, the wings do not level and the nose is raised or lowered.

   f. Rolling too fast. This prevents proper coordination between nose and wing attitudes.

304. RATE TURNS (RT)

During normal IFR flight along airways, all turns will generally be done at a specified rate, either standard or one–half standard–rate turns. The standard–rate of turn is 3º per second. At 3º per second, a turn of 180º will take one minute and a 360º turn will take two minutes. The figure on the next page is a chart showing the AOB necessary to produce a 3º per second turn at various airspeeds and altitudes. From the chart, you can see that an aircraft operating at high speeds requires a steep AOB to produce a 3º per second turn. Steep turns are more difficult to fly than shallow turns, since they result in heavy load factors; for example, a 60º bank turn applies a two "G" force to the aircraft

and pilot. To avoid these "G" forces, an FAA rule states, "use either a standard–rate turn (SRT) or 30º AOB, whichever occurs first."

ANGLE OF BANK REQUIRED FOR A HALF AND FULL STANDARD RATE TURN: CORRECTED FOR ALTITUDE				
TEMP ALTITUDE	IAS	TAS	AOB ½ SRT	SRT
13ºC	100	101	8º	15º
	120	122	9º	18º
1000'	150	152	12º	23º
5ºC	100	108	8º	16º
	120	130	10º	20º
5000'	150	162	12º	24º
–5ºC	100	117	9º	18º
	120	140	12º	21º
10,000'	150	175	13º	26º
–15ºC	100	127	10º	19º
	120	152	12º	23º
15,000'	150	190	15º	29º
–25ºC	100	137	11º	21º
	120	154	13º	25º
20,000'	150	205	15º	31º

NOTE

For BI, use the AOB for 15,000 feet, which is where the "10 percent and 20 percent" rules originate. Assume standard day for all figures.

The turns are practiced initially in level flight, crosschecking the nose with VSI and altimeter and the wings on the turn needle. A one–needle width deflection produces a one–half SRT and a two–needle deflection a full SRT. Checking for 30º in 10 seconds for a SRT will check the performance of the turns on the RMI. Since the AOB required to produce a constant–rate turn will vary with airspeed, we need some method of determining proper bank for a specific needle deflection. An accurate rule of thumb is to establish an AOB equal to 10% of the airspeed for a one–half SRT, i.e., at 150 KIAS, a 15º AOB should initially be established. Double the above value for bank necessary in a full SRT. However, use 30º maximum AOB while flying instruments.

The above rule is known as the "10 percent" rule and is valid only during balanced flight. If calibrated correctly, the turn needle always shows exact rate of turn even in an unbalanced condition, but the AOB will vary according to the balance ball's position.

1. **One–Half Standard–Rate Turns (One–Half SRT)**

   a. For practice, One–Half SRTs will be started in normal cruise on a cardinal heading and with the clock's second hand on six or twelve, using a three–second lead to compensate for attitude change. Roll into a turn on the gyro using the 10 percent rule to establish the desired bank. Once the attitude is set on the gyro, commence the crosscheck scan of turn needle for an exact one needle width deflection and altimeter and VSI for nose attitude.

   b. When the RMI is 30º past the cardinal heading, check for 20 seconds elapsed time on the clock. The next checkpoint is 60º of turn and the clock for 40 seconds of elapsed time. There are two valid reasons for checking the heading change against the clock rather than checking the time prior to referring to the heading. The instruments are arranged on the panel in groups. The attitude gyro, RMI, altimeter, and airspeed indicator are grouped together. Thus, while scanning the instruments, you do not have to shift your point of vision very far to check the RMI. Since the clock tells you nothing about the aircraft attitude, the time spent scanning it is actually wasted. If the clock is checked only once every 20 seconds, rather than four or five times, you will be able to devote more time to the attitude instrument scan.

   c. If by checking the RMI and clock, you find that the turn is less than One–Half Standard–Rate, you must then increase the AOB and check the turn needle for a greater deflection in order to catch up with the clock. When the turn has caught up with the clock, the AOB must be readjusted to maintain One–Half Standard–Rate Turn. To roll out of the desired heading, use the one–third rule for constant AOB turns to gyro heading.

   d. **Never use more than 20º of bank to catch up or less than 10º of bank to slow the rate**. If larger corrections are made, the rate of correction will be too rapid and you will bypass the heading. Have patience and catch up slowly but deliberately.

2. **Standard–Rate Turns (SRT)**

   a. Timed Standard–Rate Turns are accomplished in the same manner as One–Half Standard–Rate Turns except at an airspeed of 120 KIAS. Roll into the turn on the attitude gyro, doubling the 10 percent rule and crosscheck the turn needle for two needle width deflection, **but do not exceed 30º AOB**. Since you are now turning twice as fast (3º per second), it will be necessary to check the clock every 30º for ten seconds of elapsed time. The scan pattern corrections for desired rate of turn and the procedure for leading the rollout on the desired heading are exactly as in the One–Half Standard–Rate Turn. Remember, crosscheck the nose attitude with altimeter and VSI, making power and attitude adjustments as necessary due to the resultant decrease in vertical lift.

   b. **Never use more than 30º of bank to catch up or less than 15º of bank to slow the rate.**

NOTE

Transition from 150 KIAS to 120 KIAS by reducing power to 300 ft–lbs. Retrim.

3. **Common Errors**

a. Not using a three–second lead.

b. Not relying on the wing attitude instrument (turn needle) but trying to fly performance instruments. The turn needle is one of the most accurate instruments in the aircraft–believe it. Remember, the performance checks are only readable every 30º.

c. Unbalanced flight.

d. Overcorrecting AOB–never greater than 20º or less than 10º for a One–Half SRT, never greater than 30º AOB or less than 15º AOB for a SRT.

e. Improper nose attitude, losing altitude.

305. CONSTANT AIRSPEED CLIMBS AND DESCENTS

1. Nearly all climbs and descents are performed at a constant airspeed or at least some climb schedule. These particular maneuvers are performed in Vertical Performance Speed (VPS) during initial instruction and are used as a basis for rate climbs and descents. The purpose of these maneuvers is to emphasize that nose attitude controls airspeed in climbs and descents. These descents and climbs are continued for 1000 feet of altitude change, followed by a transition to a level off and a constant heading is maintained throughout the maneuver. Obviously, the nose attitude crosscheck instrument is the airspeed indicator. The climbs and descents are started on any numbered heading and thus the RMI remains the wing attitude crosscheck instrument. Altimeter and VSI show performance. Utilize the PAT principle for all transitions to climbs and descents.

Enter VPS from normal cruise by reducing power to 300 ft–lbs. Trim right rudder, nose up as the aircraft decelerates in order to maintain attitude and heading throughout the transition. Approaching 130 KIAS, adjust power to maintain 130 KIAS, and retrim. The VPS power setting is approximately 550 ft–lbs; the VPS level flight nose attitude is approximately 1º nose up.

2. **Climbs**

a. Increase power smoothly towards 850 ft–lbs as you add a corresponding amount of right rudder. Use peripheral vision to set power.

b. As the power is being added, raise the nose to the VPS climbing attitude of approximately 4º nose up.

c. Trim right rudder and nose slightly down (power makes the nose pitch up when holding constant airspeed).

d. Start attitude scan.

3. **Level off from Climb**

a. Fifty feet prior to desired altitude, reduce the power toward 550 ft–lbs, adding left rudder.

b. As the power is reduced, lower the nose to the level VPS attitude.

c. Trim left rudder, nose up.

d. Reset power.

e. Start attitude scan.

4. **Descents**

a. Reduce the power toward 250 ft–lbs; add left rudder.

b. As the power is reduced, lower the nose to the VPS descending attitude approximately 2º nose down.

c. Trim left rudder, slightly nose up.

d. Reset power.

e. Start attitude scan.

5. **Level off from Descent**

a. Fifty feet prior to level off altitude, add power toward 550 ft–lbs.

b. As the power is added, raise the nose toward the VPS level flight attitude.

c. Trim right rudder, nose down.

d. Reset power.

e. Start level flight scan.

6. When directed by your instructor, return to normal cruise by setting 1015 ft–lbs torque (695º ITT max). Two to three KIAS prior to 150 KIAS set approximately 650–700 ft–lbs and retrim.

7. **Common Errors**

a. Not transitioning to VPS.

b. Not accomplishing entire sequence on the attitude gyro–shifting scan to attitude crosscheck instrument before transition is complete and trimmed.

c. Overcorrecting the nose attitude for airspeed or making corrections too rapidly, before airspeed has a chance to settle down. Remember the airspeed indicator lags behind nose movement and it will not react immediately after a gyro change is made. Retrim.

d. Not trimming the rudder, resulting in heading drift.

e. Fixating on the torque gauge.

306. CONSTANT RATE CLIMBS AND DESCENTS (CRC/D)

1. Proficiency in performing climbs and descents at a definite vertical speed is very important in actual instrument flight. The vertical speed as well as airspeed must be controlled accurately during a precision Ground Controlled Approach (GCA), ILS approach, instrument takeoff, etc.

2. The standard rate for climbs and descents has been established at 500 feet per minute. However, since jet powered aircraft operate most efficiently at high altitudes, a higher rate of altitude change may be used by these aircraft, often as high as 4000 feet per minute. In this manual, we shall consider primarily descents and climbs at 1000 feet per minute. By using the same principles, the procedures for different rate of change may be derived.

3. A constant–rate descent is in reality a constant–airspeed descent, performed at an exact rate. In other words, attitude (airspeed) is the primary consideration and performance (rate) secondary. You learned in the previous section that nose attitude controls airspeed; now you will learn to maintain a constant airspeed and vary your rate of descent by use of power adjustment. Power controls rate of descent or climb.

4. Constant–rate climbs and descents are performed in VPS configuration. They are started on a numbered heading using a three–second lead prior to the clock's second hand reaching a six or twelve to compensate for attitude change. The transitions, scan, power settings, and trim are the same as constant airspeed climbs and descents with the inclusion of the VSI and clock as additional performance indicators.

5. In order to check the performance in a 1000 FPM descent, crosscheck the VSI and utilize checkpoints on the altimeter. For every 250 feet of altitude change, check the clock for 15 seconds of elapsed time or every 500 feet, 30 seconds of elapsed time.

6. If the descent becomes less than 1000 FPM, the rate of descent must be increased to a value greater than 1000 FPM in order to catch up with the time schedule. By decreasing power and changing nose attitude (to maintain constant airspeed), you will increase the rate of descent. As

soon as a checkpoint indicates that the aircraft is back on performance, attitude and power are again adjusted to maintain a 1000 FPM descent. Now let us consider the corrections necessary for a rate of descent greater than the desired rate of 1000 FPM. If, for example, after descending 500 feet, only 25 seconds have elapsed, you are ahead of desired performance; power must be added and nose attitude adjusted to slow the rate of descent to less than 1000 FPM. As soon as the altitude change and time agree (500 feet at 30 seconds or 750 at 45 seconds), power and attitude must then be adjusted to a value between the initial setting, which resulted in a descent greater than 1000 FPM, and the first adjustment, which gave less than 1000 FPM descent. These power and attitude adjustments will continue to be made until altitude change and elapsed time coincide with a 1000 FPM descent. A constant rate cannot be maintained without a constant airspeed (130 KIAS), therefore prior to making power corrections, crosscheck airspeed.

7. The same principles apply for 1000 FPM climbs. A 1000 FPM climb will normally be achieved by using 850 ft–lbs of torque. However, if you determine that the rate is insufficient and the addition of power to maximum allowable does not yield a 1000 FPM climb, maintain 130 KIAS, regardless of rate of climb.

8. **Common Errors**

a. Starting the maneuver off altitude.

b. Not using a three–second lead. An incorrect or late transition will adversely affect your arriving at the first checkpoint at the correct time.

c. Attempting to fly performance scan and neglecting airspeed. Positive performance checkpoints occur only once every 250 feet. The common tendency is to allow airspeed to remain off until a performance check indicates a deviation from the desired rate. If the airspeed is not 130 KIAS, the attitude is incorrect and the performance cannot possibly be proper. Make appropriate nose correction for airspeed as soon as any deviation from 130 KIAS is indicated.

d. Not retrimming after making a correction. Remember, if you correct for airspeed or change power and ease the nose to maintain airspeed, you have "set" a new attitude. You must trim to hold it.

e. Correcting the rate with nose movement: power controls rate.

f. Correcting for airspeed with power: nose attitude controls airspeed.

NOTE

(e) and (f) are the most common errors.

g. Overcorrecting for airspeed (equate nose movement to airspeed correction).

307. VERTICAL S–1 PATTERN (S–1)

1. This pattern is flown in VPS and on any numbered heading. It consists of a 1000–FPM descent for 1000 feet, followed by a 1000 FPM climb for 1000 feet. This series of descents and climbs is performed twice.

2. Begin the pattern with the descent using a three–second lead prior to a 6 or 12. Perform the same transition to a descent utilized in constant–rate maneuvers. Performance checks are also accomplished as in the constant–rate maneuvers.

3. The transition from the descent to the climb is started three seconds prior to the end of the descending minute or 50 feet prior to the end of the 1000 foot descent, whichever occurs first. Add power toward approximately 850 ft–lbs torque, while smoothly raising the nose toward the climbing attitude of approximately 4º nose up; retrim for the 130 KIAS climbing attitude. As power is added, backpressure must be simultaneously increased in order to prevent acceleration and delay in climb rate.

NOTE

Because of the "lag" or inherent error in the altimeter, the altitude will rarely stabilize exactly on a 1000 foot mark during the transition. Therefore, a 1000–foot altimeter mark on the 6 or 12 is not an accurate checkpoint and should not be considered. The transition is performed on the gyro, then reestablish the attitude scan and finally, check performance at the first 250 feet in the climb.

4. The transition from the climb to the descent is started three seconds prior to the end of the climbing minute or 50 feet prior to reaching the original altitude, whichever occurs first. Reduce the PCL (applying simultaneous, proportional left rudder pedal control pressure) to approximately 250 ft–lbs, while simultaneously lowering the nose to the descending attitude, approximately 2º nose down. The second transition to a climb is accomplished exactly as was the first.

5. In both climb and descent, the final checkpoint (250 feet remaining prior to transition) is relatively inadequate for actual rate correction, as there is insufficient altitude remaining for a correction to be effective. The value of these points is for determining whether to transition on time or altitude. For example, if in the climb, the altimeter reads 250 feet to go (750 in the climb) and ten seconds prior to a twelve (clock on ten), you are behind in the climb rate, and will probably transition on the clock.

6. Complete the pattern by simultaneously reducing torque to VPS level flight power 50 feet prior to reaching level off altitude, lowering the nose to the VPS level flight attitude. Stabilize in VPS. Return to normal cruise when directed by your instructor by setting 1015 ft–lbs (695º ITT max). Two to three knots prior to 150 KIAS, set approximately 650–700 ft–lbs and retrim.

7. **Common Errors**

a. Not entering VPS prior to starting the pattern.

b. Not transitioning at proper time or altitude. After the last 250 foot checkpoint, you should **anticipate** the transition.

c. Not transitioning entirely on gyro, especially attempting the transition while watching the altimeter.

d. Not using rudder during power changes, resulting in heading drift.

308. GCA MANEUVER

1. The GCA maneuver closely resembles the procedures used for an instrument Ground Controlled Approach (GCA).

2. The GCA maneuver is begun in normal cruise on a cardinal heading and base altitude.

a. While maintaining heading and altitude, make a level transition to the Basic Approach Configuration (BAC):

i. Reduce power to 450 ft–lbs torque, applying slight left rudder pressure to compensate for the power reduction.

ii. Check airspeed below 150 KIAS and lower the gear. Maintain the level flight attitude on the attitude gyro and anticipate trim, right rudder up elevator.

iii. Slowly raise the nose, to maintain altitude while decelerating to 120 KIAS, toward the BAC level attitude (approximately 2º nose up). Trim right rudder, nose up.

iv. As you approach 120 KIAS, readjust power to approximately 700–750 ft–lbs. Maintain 120 KIAS and retrim.

b. Perform the Landing Checklist down to the flaps, reporting each item to your instructor. Check landing lights on.

c. Make a Standard–Rate Turn (two–needle width turn) in either direction for 90º of heading change while maintaining altitude. Lead the rollout by one–third the AOB.

d. Upon rolling out of the turn, stabilize the aircraft on altitude heading, and airspeed.

e. Make a level flight transition to the Final Approach Configuration (FAC) by reducing power to 450 ft–lbs of torque, checking the airspeed below 120 KIAS, and lowering

full flaps. As the flaps extend, smoothly lower the nose toward the FAC attitude (0 degrees) in order to counteract the aircraft's tendency to gain altitude as the flaps extend. Trim right rudder, nose up as the aircraft decelerates to maintain altitude and heading. Approaching 100 KIAS, advance the power to 700–750 ft–lbs. torque.

f. Check the landing gear and flaps full down and report: "Gear down, flaps down, Landing Checklist complete."

g. Using a Standard–Rate Turn make a level turn in the same direction as the last turn for 90º of heading change. Maintain altitude and airspeed. Lead the rollout by one–third rule.

h. Stabilize momentarily, then reduce power to 550–600 ft–lbs torque, lower the nose to approximately 2–3 degrees nose down, maintain 100 KIAS and descend for 1000 feet. Establish a 500-foot per minute rate of descent on the VSI by adjusting power as necessary. Remember, **nose attitude controls airspeed and power controls rate of descent**. Be sure to include the VSI as part of your systematic scan. Retrim.

i. During the descent the instructor will give approximately four heading changes of 3 to 10 degrees.

j. Upon completion of the 1000 foot descent, execute a missed approach by:

   i. Advancing power to 1015 ft–lbs, monitor ITT, and coordinating right rudder pressure to maintain balanced flight, ball centered), and

   ii. Simultaneously raising the nose to 4º nose up and holding a positive climbing attitude.

   iii. Check for a positive rate of climb on the VSI, and airspeed at or below 120 KIAS and retract gear and flaps. Check landing lights off. Check and report "Three up and locked." Raise the nose to 6º to prevent a descent as the flaps retract. Your airspeed will be approximately 100 KIAS at this point, but accelerating. Upon reaching 120 KIAS, readjust nose 6–8 degrees up.

k. Maintain 120 KIAS (6–8 degrees nose up) and climb for 1000 feet on the last assigned heading used in the descent. Retrim.

l. Two hundred feet prior to level off, commence a transition to normal cruise. Trim left rudder, down elevator as airspeed increases. Two to three KIAS prior to normal cruise airspeed, reduce power to 650–700 ft–lbs to maintain 150 KIAS. Retrim.

3. **Common Errors**

a. During Missed Approach, lowering the nose after retracting gear and flaps in order to gain 120 KIAS; resulting in a descent.

b. Not anticipating heading or altitude lead during level off from Missed Approach.

c. Lack of right rudder during Missed Approach, resulting in left heading drift.

d. Rotating nose above prescribed attitudes during Missed Approach.

e. During 1000 foot descent, not maintaining 500 FPM rate. Use power as necessary to maintain rate and adjust nose attitude to maintain airspeed.

f. Forgetting to ask the instructor to turn landing lights on/off.

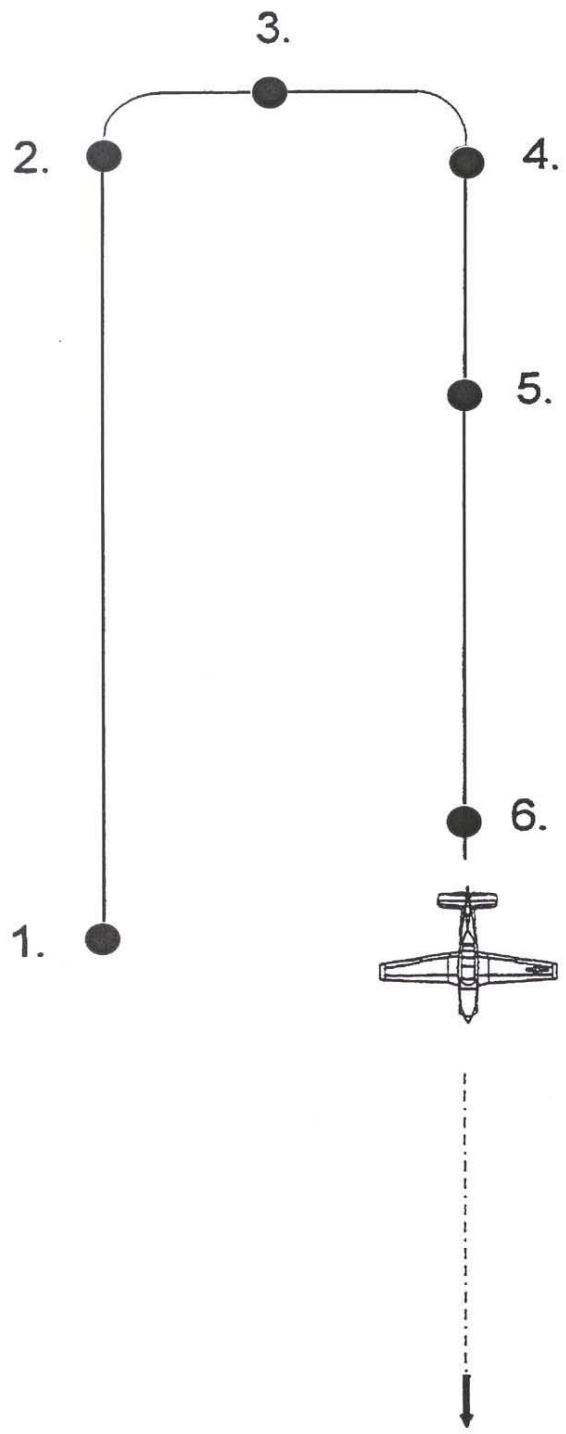

1) Transition to 120 knots Basic Approach Configuration.

   a) Reduce power to 450 ft–lbs and check airspeed below 150 knots.
   b) Lower landing gear.
   c) Adjust power to maintain 120 knots (approximately 700–750 ft–lbs).
   d) Retrim.
   e) Report Landing Checklist down to the flaps. Check landing lights on.

2) Using a SRT, make a level turn for 90º heading change.

3) Reduce power to 450 ft–lbs torque, check airspeed below 120 knots and lower full flaps. Slow to 100 knots, add power as necessary (700–750). Retrim. Complete Landing Checklist, and report to the instructor: "Gear down, flaps down, Landing Checklist complete."

4) Using a SRT, make a level turn for 90º heading change.

5) Set approximately 550–600 ft–lbs, simultaneously lower nose (approximately 2–3 degrees nose down), retrim, and descend for 1000 feet utilizing a 500 FPM descent on the VSI. Maintain heading as assigned. Maintain 100 knots.

6) Initiate the Missed Approach upon completion of 1000–foot descent.

   a) Set 1015 ft–lbs, monitor ITT.
   b) Raise nose to 4º nose up. Check positive rate of climb.
   c) Raise gear and flaps; set nose 6º up as flaps retract, check landing lights off. Check and report "Three up and locked."
   d) Climb out on last assigned heading at 120 knots (6–8 degrees nose up) for 1000 feet.

Figure 3–8 GCA Maneuver

309. APPROACH PATTERN

1. The Approach pattern approximates the procedures required to execute an Instrument approach over a radio facility.

2. The maneuver is started in normal cruise on a cardinal heading in the following manner:

   a. Roll into a right SRT (two–needle widths) for 90º of heading change. Maintain altitude and airspeed.

   b. After completion of the turn, note the time and commence timing outbound for three minutes.

      i. Transition to 120 knot descent by reducing the power to 300 ft–lbs torque, while maintaining altitude. As the airspeed decelerates toward 120 knots, lower the nose to approximately 2º nose down and descend for 1000 feet at 120 knots. Trim the aircraft for a 120 knot descent.

      ii. Twenty five feet prior to level off, transition to level flight by adding power to approximately 450–500 ft–lbs, and raising the nose to the slow cruise attitude (approximately 1½º nose up), and retrim.

   c. At the end of three minutes timing outbound, commence a left Standard–Rate Turn for 210º of heading change. During the turn, the nose attitude will have to be raised slightly above the slow cruise attitude to maintain altitude. Add power as necessary to maintain airspeed (approximately 25–50 ft–lbs torque).

   d. As you roll wings level after 210º of heading change, commence a transition to BAC by lowering the gear and simultaneously lowering the nose to the BAC descending attitude (2 – 4 degrees nose down). Retrim as necessary and descend at 120 knots for 500 feet.

      i. During the descent, report each item of the Landing Checklist to your instructor. Check landing lights on.

      ii. One hundred feet prior to the end of the 500 foot descent, transition to level flight by adding power to 700–750 ft–lbs torque, raising the nose to the BAC level flight attitude (approximately 2º nose up), and retrim as necessary.

   e. Note the time and maintain 120 knot level flight for one minute.

   f. After completion of one minute of timing, execute a Missed Approach by:

      i. Advancing the PCL to 1015 ft–lbs. and monitor ITT.

ii. Raise the nose to a positive climbing attitude (approximately 6 – 8º nose up), check for a positive rate of climb with airspeed at or below 120 knots, then retract the gear; check landing lights off. Check and report "Three up and locked."

iii. Maintain airspeed of 120 knots and when established in the climb, start a right SRT for 45º of heading change. Roll out using the one–third rule. Maintain 120 knots and climb for 1500 feet to the original altitude.

iv. Two hundred feet prior to level off commence a transition to normal cruise (150 KIAS). Trim left rudder, down elevator as airspeed increases. Two to three knots prior to normal cruise airspeed, reduce power to approximately 650–700 ft–lbs and maintain 150 knots. Retrim.

3. **Common Errors**

a. Not crosschecking turn needle for initial standard rate turn.

b. Climbing instead of maintaining altitude during deceleration to 120 knots.

c. Descending prior to 120 knots.

d. Not crosschecking turn needle for standard rate turn during 210º turn.

e. Starting the one minute timing after completion of the 210º turn instead of at the end of the 500 feet descent.

f. Becoming disoriented during 210° turn, resulting in over or undershooting heading. Always check RMI for new heading prior to starting turn.

g. Not adding 25–50 ft–lbs of torque during 210º turn, thereby getting slow.

h. During Missed Approach, insufficient rudder, resulting in a left heading drift.

i. Turning on the Missed Approach prior to reporting "Three up and locked" or established in the climb.

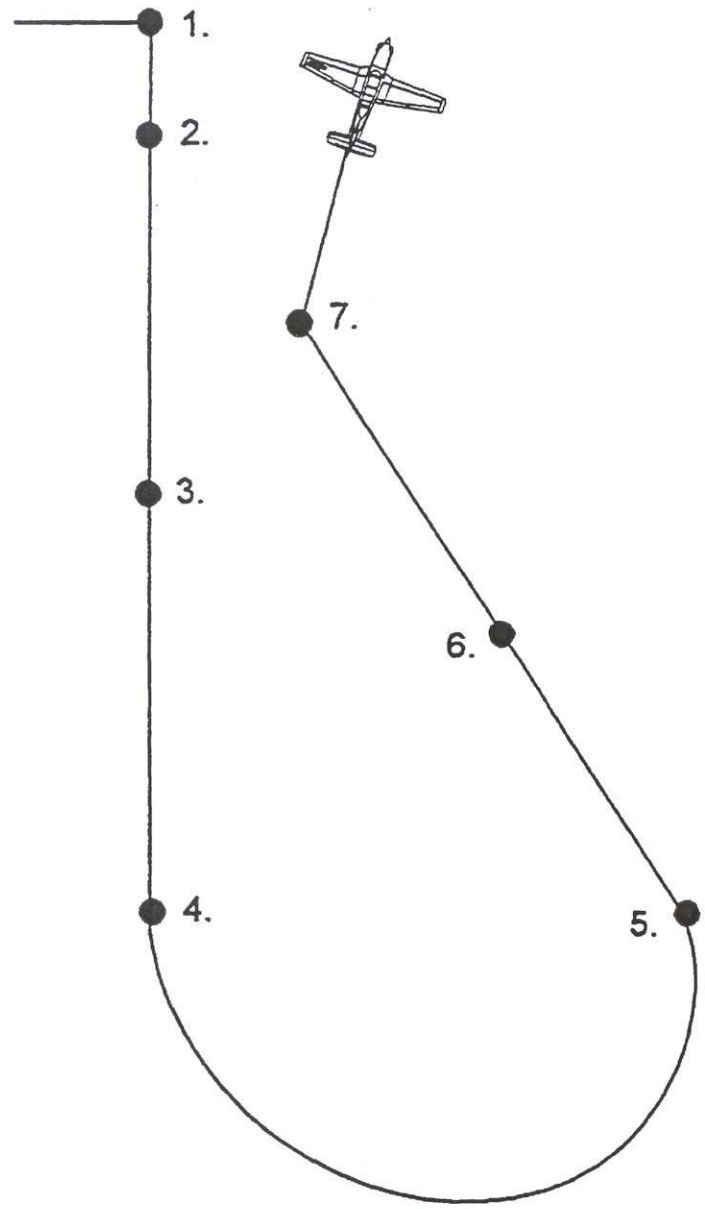

1) SRT to right for 90º of heading change in normal cruise.

2) Begin three minute timing. Reduce power to 300 ft–lbs, establish 120 knot descent for 1000 feet.

3) Level off in slow cruise.

4) Conclusion of three minutes timing, commence SRT for 210º heading change, maintaining altitude.

5) Roll out; transition to BAC; 500 feet descent. Conduct Landing Checklist. Check landing lights on.

6) One hundred feet prior, level off in BAC; begin one minute timing.

7) Execute Missed Approach: Set 1015 ft–lbs (monitor ITT), 6 – 8º nose up, check for positive rate of climb. Retract gear, check landing lights off. Check and report "Three up and locked." Establish 120 knot climb, make SRT for 45º. Climb for 1500 feet. Level off in normal cruise.

Figure 3–9 Approach Pattern

310. PENETRATION PATTERN

1. The penetration is a procedure used by aircraft to effect a safe and expeditious letdown from high altitude under instrument conditions. Normally, the penetration is begun from an initial altitude over a designated radio facility. Upon completion, the aircraft is in a position to make a landing at a selected field. However, for training purposes, only the airwork procedures will be taught by assigning a penetration heading and level off altitude with no reference to a radio facility.

2. You will be given the aircraft approaching the penetration site. Your instructor will assign headings to fly to position the aircraft over the penetration site with a minimum of one minute on the penetration heading prior to commencing. Once you have taken control of the aircraft, complete the items of the Penetration Checklist, reporting each item to your instructor. The Penetration Checklist is as follows:

a. Oxygen – 100% (White Lever).

b. Fuel state checked.

c. Cockpit defog control – As required (if required; request instructor to check).

3. When the above procedure has been completed and when established on your penetration heading, commence the penetration descent, **when cleared by your instructor**, by:

a. Reducing the PCL to idle while simultaneously lowering the nose on the gyro 13 – 15 degrees nose down to initiate the descent.

b. Trim left rudder and nose down elevator as the aircraft accelerates.

c. As the airspeed approaches 180 knots, trim the aircraft, and maintain 180 knots. The rate of descent on the vertical speed indicator will be about 4000 feet per minute. The nose attitude will be approximately 11 – 13 degrees nose down when trimmed at 180 knots.

4. Upon reaching an altitude of 10,000 feet, commence a left 30º AOB descending turn for 210º. The nose will have to be adjusted up approximately 2º and trimmed up because of the slight loss of vertical lift in the turn; otherwise the nose will fall slightly and the airspeed will increase. Upon rolling out of the 210º turn, vertical lift is increased. Thus, it will require forward stick, slight nose down attitude (approximately 2º), and down elevator trim to maintain 180 knots. Immediately upon rolling wings level, check the clock and fly a straight leg for one minute. Upon completion of this one minute timing, execute a shallow turn (15º AOB) to the reciprocal of the initial penetration heading.

5. Upon reaching 1000 feet above the assigned level off altitude, increase power to 250 ft–lbs. and slow the rate of descent by smoothly raising the nose halfway (5 – 7 degrees nose down) toward the level flight attitude. Maintain this attitude momentarily, allowing the aircraft to decelerate. Once the VSI is stabilized, raise the nose on the attitude gyro to set up a 500–1000

FPM rate of descent on the VSI; maintain this positive rate of descent by slowly easing the nose up as the airspeed dissipates. Trim right rudder and nose up gradually throughout this transition for deceleration.

6. Normally, you will reach the assigned level off altitude before reaching 120 knots. If so, begin level off 50 feet prior to assigned altitude. Level off by leaving the PCL at 250 ft–lbs until the airspeed approaches 120 knots; continue to trim and gradual nose up elevator as the aircraft slows toward the slow cruise attitude. Two to three knots prior to 120, add power to approximately 450 ft–lbs to maintain level flight. Retrim. If you reach 120 knots prior to reaching the assigned level off altitude, continue the descent at 120 knots. Transition to level flight 50 feet prior to the level off altitude by adding power to 450 ft–lbs and raising the nose to the slow cruise attitude. The slow cruise attitude is approximately 1½ degrees nose up. Retrim.

NOTE

This transition to a level off can occur prior to the completion of the 210º turn, during the one minute straight leg, or even after the turn back to the reciprocal heading. It is dependent upon the assigned level off altitude and the rate of descent. Both rapid scan and planning ahead are required to keep everything under control.

7. The practice penetration is complete when the aircraft is on the reciprocal of the penetration heading at 120 knots and on assigned level off altitude.

8. **Common Errors**

a. Not maintaining attitude scan while performing Penetration Checklist approaching penetration site. Losing or gaining altitude.

b. Not trimming nose down during transition to 180–knot descent.

c. Not raising nose slightly in 210º turn.

d. Over controlling nose during level off; poor trim during last 1000 feet of descent.

e. Not watching nose attitude during turn to reciprocal heading. The nose will tend to fall through during this turn.

f. Not timing out of the penetration turn.

g. Not trimming for deceleration from 180 to 120 knots.

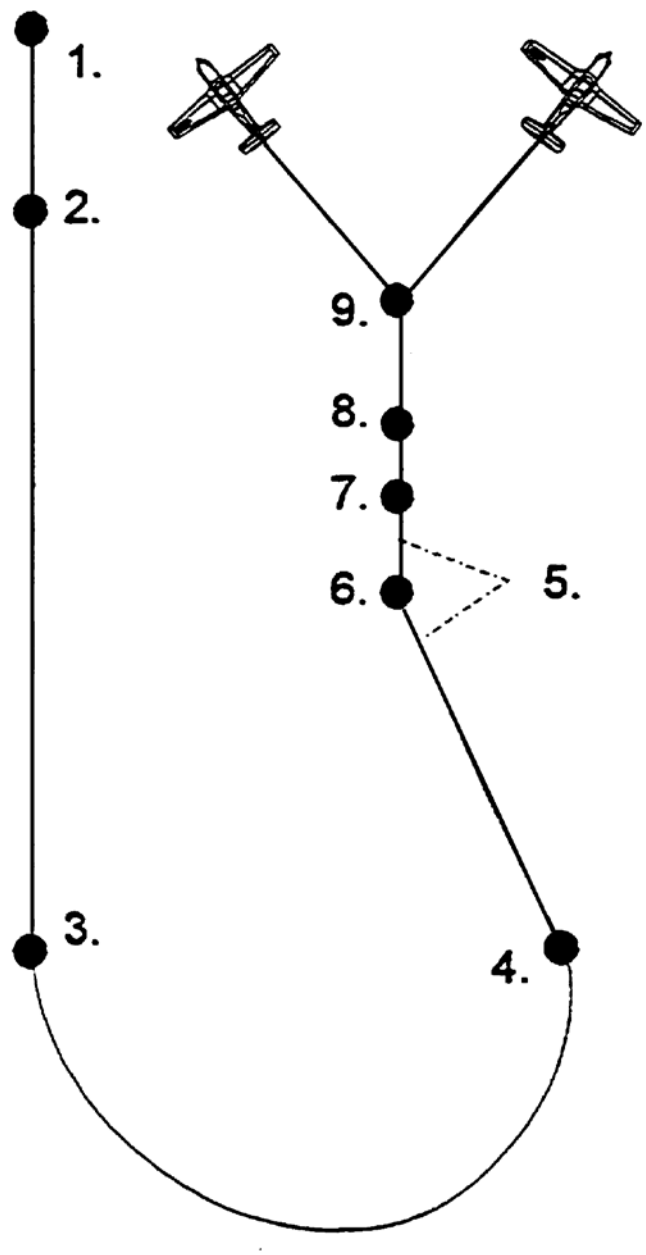

1) Complete Penetration Checklist.
OXYGEN: 100%
FUEL: Quantity (L/R)
DEFOG: As required.

2) When cleared, transition to 180 knot descent.
PCL: IDLE
NOSE: 13–15° down, then 11 – 13° as airspeed approaches
A/S: 180 KIAS, reset nose 11 - 13° down

3) At 10,000 feet:
TURN: 210° left, use 30° AOB.

4) Roll out of turn:
LEVEL WINGS: After 210° of heading change.
BEGIN TIMING: Time for one minute.

5) 1000 feet ABOVE Level off altitude:
PCL: 250 ft–lbs.
NOSE ATT: Approx. 5 – 7° down.
RATE OF DESCENT: 500 – 1000 FPM.
DECELERATE: Towards 120 KIAS.

6) At conclusion of one minute timing:
15° AOB right turn to reciprocal of penetration heading.

7) Level off:
A/S: 120 KIAS.
PCL: Approx. 450 ft–lbs.
NOSE ATT: Approx. 1.5° up.

8) Transition to BAC:
GEAR: Down
PCL: 650–700 ft–lbs.
A/S: Maintain 120 KIAS.
NOSE ATT: Approx. 2° up.
PERFORM: Landing Checklist to flaps. Check landing lights on.

9) Missed Approach
PCL: Max allowable, 1015 (695°).
NOSE ATT: 6 – 8°up.
CHECK: Positive rate of climb and A/S at or below 120 KIAS, raise the gearcheck landing lights off. Check and report "Three up and locked."
SRT: For 45° as directed by instructor. Level off after 1000 feet of climb at 150 KIAS.

Figure 3–10 Penetration, BAC Maneuver and Missed Approach

NOTE

With gear up and landing lights on, the master caution light will illuminate as a reminder to secure the landing lights.

311. BASIC APPROACH CONFIGURATION MANEUVER

1. At the completion of the penetration pattern, we further simulate an Instrument Approach by transitioning to the Basic Approach Configuration (BAC) and then executing a Missed Approach. The Basic Approach Configuration is performed by:

a. Power to 450 ft–lbs, check airspeed below 150 knots, and lower the gear. Add power to 650 – 700 ft-lbs.

b. Adjust the nose to the BAC level flight attitude (approximately 2º nose up), retrim and maintain 120 knots.

c. Perform the Landing Checklist down to the flaps, reporting each item to your instructor. Check landing lights on.

2. Execute the Missed Approach when directed by your instructor by:

a. Adding power to 1015 ft–lbs, monitor ITT and simultaneously add right rudder.

b. Simultaneously raise the nose to a positive climbing attitude (6–8 degrees nose up).

c. Check for a positive rate of climb and airspeed at or below 120 knots and raise the gear; checking landing lights off. Check and report three up and locked.

d. Maintain climb airspeed. Retrim.

e. Once established at 120 knots, roll smoothly using a standard rate turn in the direction specified by your instructor, for 45º of heading change. Lead the rollout by one-third the AOB.

f. Climb 1000 feet at climb airspeed.

g. Two hundred feet prior to level off, commence a transition to normal cruise (150 knots). Trim left rudder, down elevator as airspeed increases. Two to three knots prior to normal cruise airspeed, reduce power to approximately 600–650 ft–lbs and maintain 150 knots. Retrim as required. Note, the normal cruise power setting is less at low altitude.

h. The Missed Approach is complete when established 45º from original heading, level 1000 feet above original altitude, and in normal cruise configuration.

3. **Common Errors**

a. Allowing nose to pitch up when lowering the gear entering BAC.

b. Improper attitude control during Missed Approach. Hold approximately 6–8 degrees nose up and 24º AOB. Not holding 6–8° will cause an increase or decrease in airspeed. Do not rotate over 8º nose up.

c. Not anticipating heading or altitude lead upon level off from Missed Approach.

d. Exceeding climb airspeed during Missed Approach climbout.

e. Turning prior to establishing 120 knots.

f. Trying to raise the gear with greater than 120 knots.

312. UNUSUAL ATTITUDES (FULL PANEL)

An unusual attitude is a flight condition involving an extreme attitude, airspeed, or combination of the two. Confusion or carelessness of the pilot, excessively turbulent air, or inadvertent entrance into a cloud formation are some examples of how an aircraft may enter an unusual attitude.

The miniature airplane presentation on the attitude gyro is the most rapid method to picture the aircraft attitude. In addition to the attitude gyro, the airspeed indicator will furnish indications of nose attitude as well as elevator stick pressures to be anticipated, while the turn needle and RMI will give indications of wing position.

Recoveries must be timely and sequentially effected to prevent dangerously extreme attitudes. For example, in a nose low, airspeed high and increasing attitude there is a tendency to pull back stick to stop the altimeter unwinding, thus tightening the turn (GRAVEYARD SPIRAL). In nose high attitudes, there is a danger of stall if the recovery is not timely.

To determine the attitude of the aircraft and the proper recovery to be used, the pilot should immediately check the attitude gyro, which provides an instantaneous picture of the aircraft attitude. Since the gyro can precess, or in extremely rare cases, tumble, we must verify the attitude gyro prior to a recovery. The nose attitude should be quickly crosschecked by referring to the airspeed indicator; confirm wing attitude on the turn needle as you return toward the gyro to effect a recovery.

There are three different types of unusual attitudes taught in the Basic Instrument Stage. They are the nose low attitude, nose high attitude, and extreme nose high attitude.

1. **Limitations.** For purposes of Basic Instrument training in the T–34C, the unusual attitudes will be entered from normal cruise. The instructor will perform the Stall Checklist and clearing turns prior to initiating any unusual attitude maneuver. The instructor shall observe the following limitations while performing unusual attitudes in full panel:

a. Not to exceed 50º nose high.

b. Not to exceed 40º nose low.

c. Not to exceed 90º of bank.

NOTE

On all unusual attitudes, the aircraft will be trimmed for straight and level flight with power set at 650–700 ft–lbs. of torque.

d. Nose Low Attitude

The aircraft is in a nose low unusual attitude any time the nose is below the horizon, regardless of airspeed. (Figure 3–11.)

i. Immediately check gyro for nose and wing position.

ii. Glance at airspeed, then the turn needle. If airspeed is fast (approaching 200 knots), reduce power to idle. Steps i and ii are accomplished almost simultaneously.

iii. Maintain nose attitude as you level the wings on the attitude gyro and center the ball.

iv. After the wings are level, raise the nose to the level flight attitude. (NOTE: Level flight attitude is dependent upon airspeed.)

v. Return power to normal cruise power when gyro is indicating the level flight, and 2 to 3 knots prior to 150 knots.

vi. **Common Errors**

(a) Allowing nose to rise while rolling wings level, thus effecting a "rolling pullout."

(b) Not recognizing need for power reduction, not returning power to normal cruise setting upon recovery.

e. **Nose High Attitude**

A normal nose high attitude is any attitude where the nose is less than 30º nose up pitch and the airspeed is equal to or greater than 100 knots. (See Figure 3–12.)

i. Immediately check gyro for nose position (less than 30º up).

ii. Crosscheck airspeed for 100 knots or greater and check turn needle as you return to the gyro.

iii. Lower the nose toward the level flight attitude, maintaining AOB.

iv. Approaching level flight, level the wings, center the ball, and maintain balanced flight.

NOTES

1. The nose and wings reach the straight and level flight attitude almost simultaneously.

2. Level flight is airspeed dependent and will necessarily be found above the horizon for all recovery airspeeds less than 150 knots and below the horizon for airspeeds greater than 150 knots.

v. **Common Errors**

(a) Not checking airspeed and making a normal nose high recovery with less than 100 knots.

(b) Lowering the nose completely to the horizon, then rolling the wings level. This type of recovery tends to produce vertigo.

f. **Extreme Nose High Attitude**

An extreme nose high attitude is equal to or greater than 30º nose up pitch or less than 100 knots, with the nose above the horizon. (See Figure 3–13.)

i. Immediately check gyro for nose position (30º or more pitch) and wing position.

ii. Crosscheck airspeed indicator for less than 100 knots.

NOTE

Either condition mentioned in i or ii constitutes an extreme nose high attitude. If the airspeed is less than 100 knots, the nose must be above the horizon; otherwise, it is simply nose low.

iii. Crosscheck turn needle.

iv. Using aileron and rudder, roll the aircraft toward, not necessarily to, 90º of bank, in the direction of the turn needle.

v. Fly the nose of the aircraft through the horizon, using bottom rudder as necessary.

vi. As the nose passes the horizon, roll wings level (do not pull back stick during this roll–avoid a rolling pullout), center the ball and maintain balanced flight.

vii. Raise the nose to the level flight attitude.

viii. **Common Errors**

(a) Not crosschecking airspeed. A pitch attitude of 10º nose up and an airspeed of 95 knots is an extreme nose high attitude.

(b) Continuing the roll to 90º AOB, even though the nose has passed the horizon.

(c) Allowing the nose to rise while rolling wings level, thus effecting a "rolling pullout."

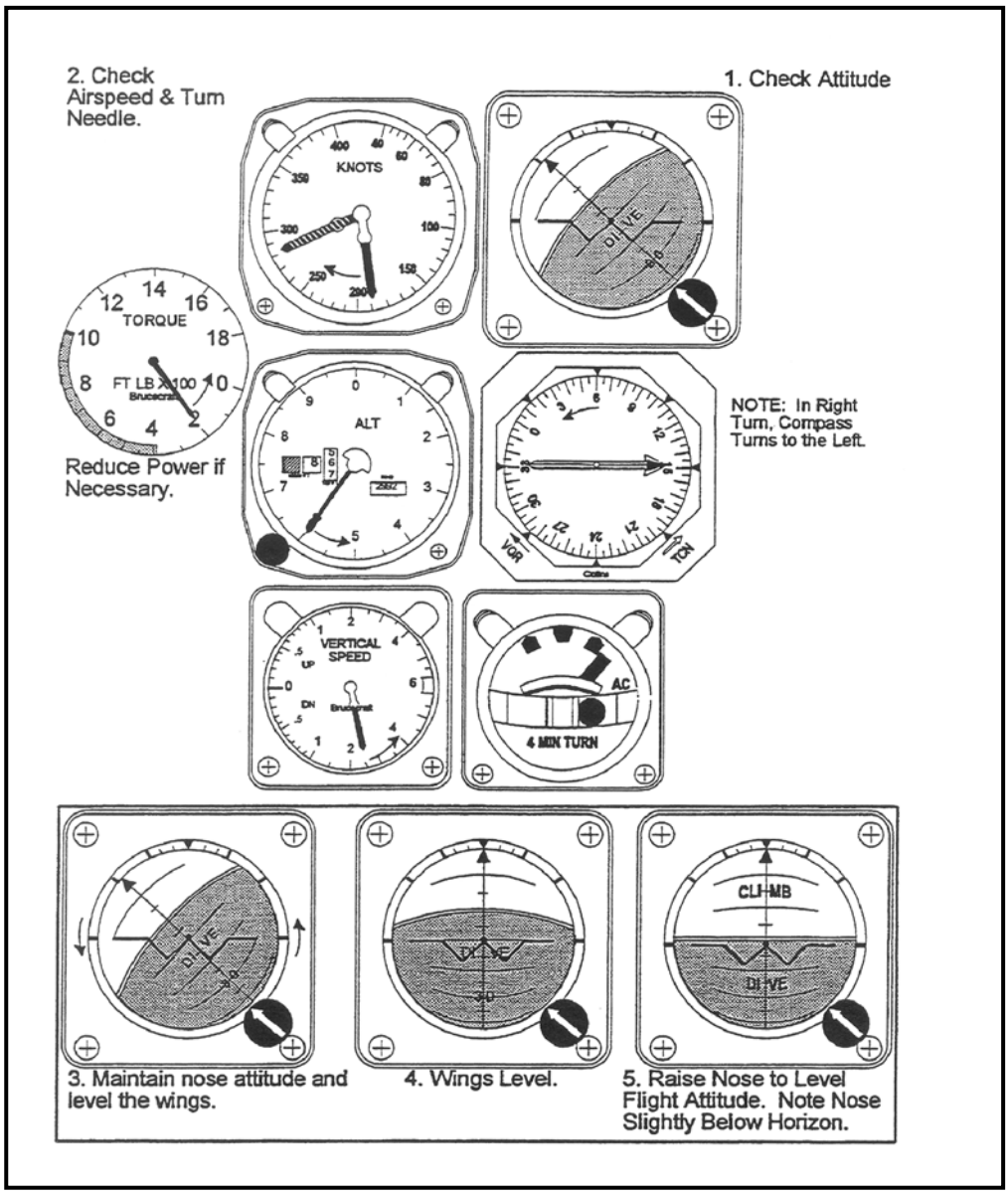

Figure 3–11 Nose Low Recovery

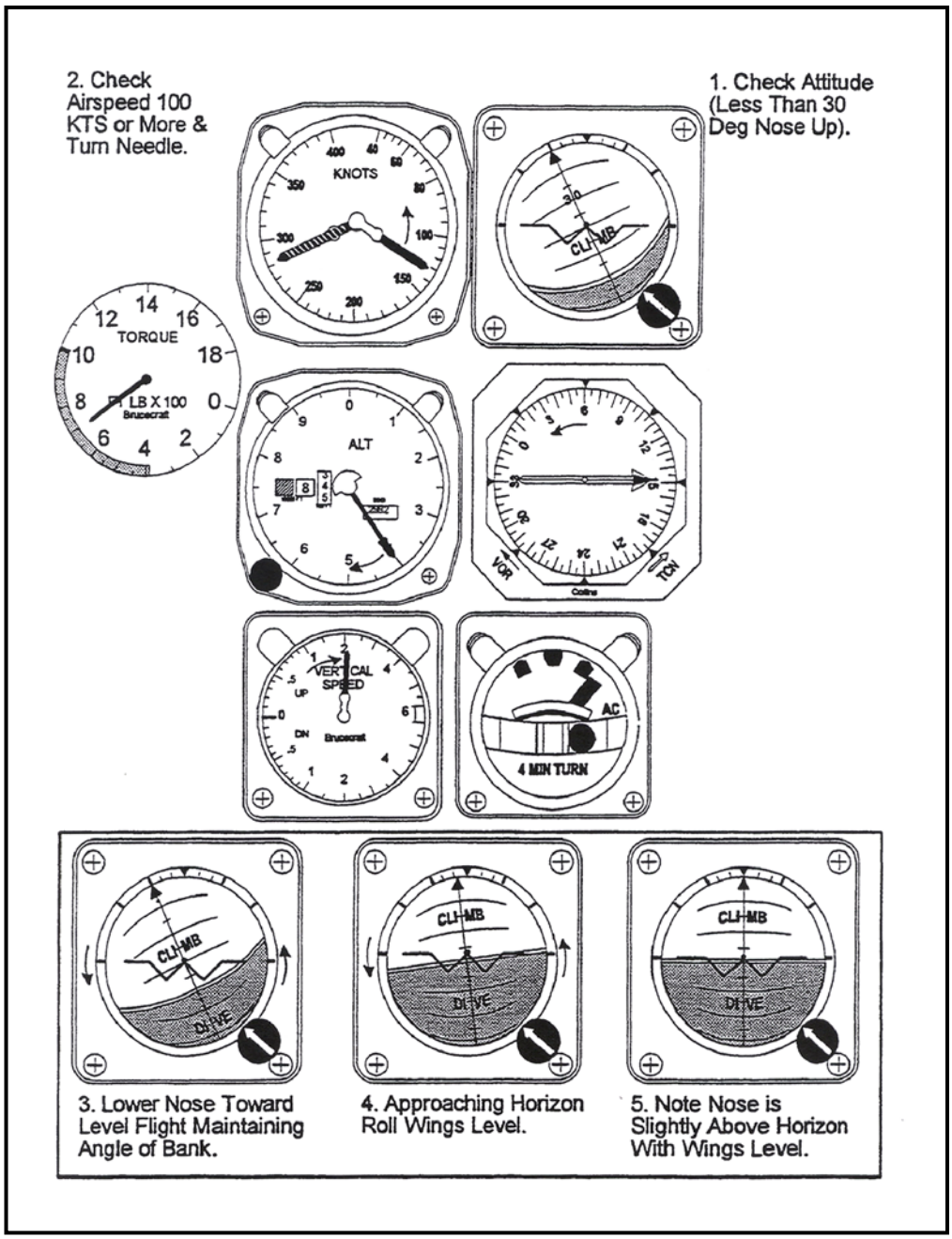

Figure 3–12 Nose High Recovery

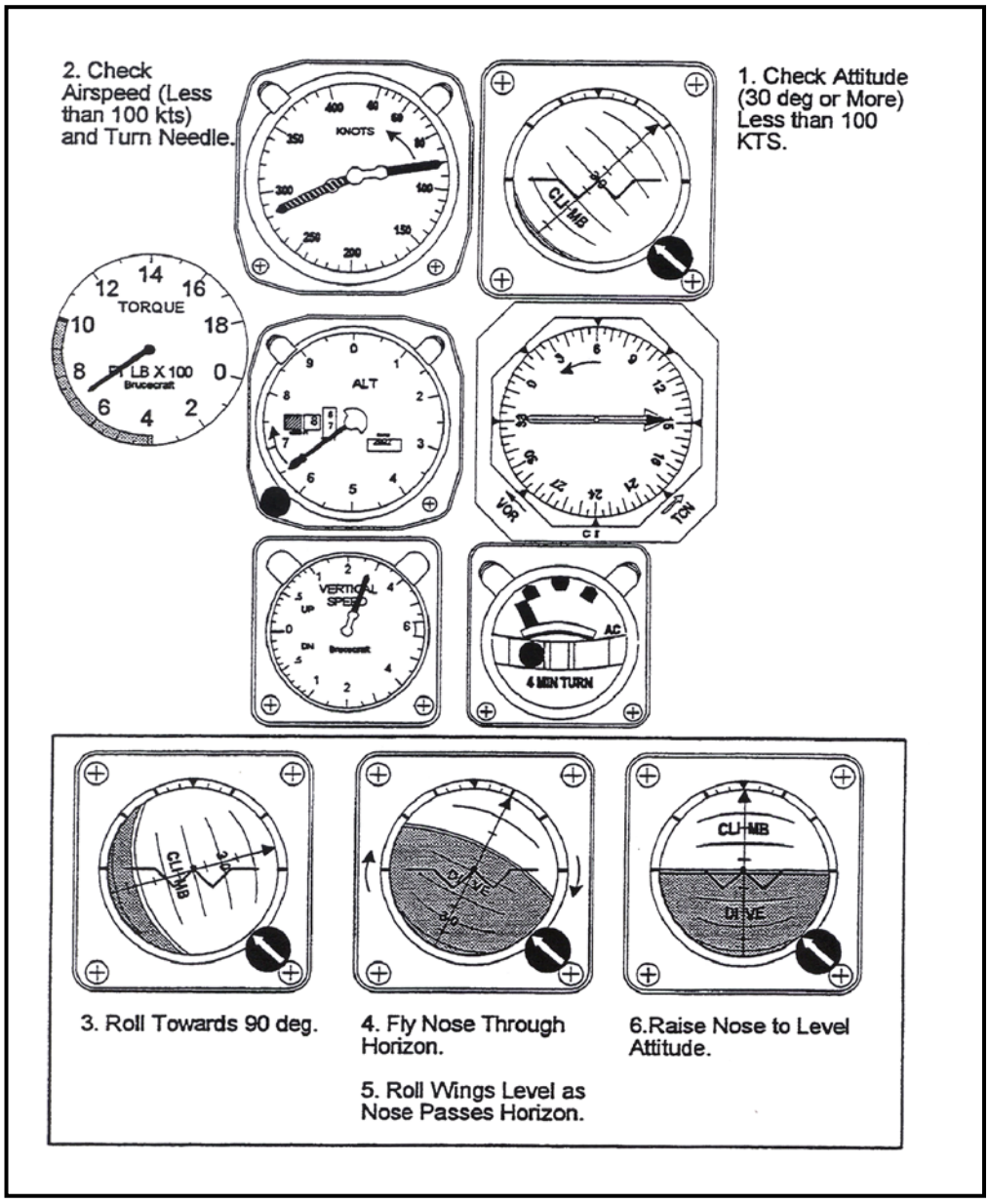

Figure 3–13 Extreme Nose High Recovery

313. PARTIAL PANEL INSTRUMENT FLIGHT

Partial panel instrument flight begins upon failure of the primary attitude instrument, the attitude gyro. The flight must now be continued and the aircraft attitude controlled by referring to the remaining instruments only. The loss of the gyro can occur from a failure of the gyro itself or from an inverter (AC power) failure. In the event that the gyro failed due to an inverter failure, partial panel flight would not be possible since the turn needle is also an AC powered instrument. For training purposes, we will simulate partial panel by turning off the aft cockpit attitude gyro and RMI. This will result in the loss of the attitude gyro, the RMI, and its associated single and double navigation needles. We practice partial panel flight in the T-34 by simulating an inverter failure since many fleet aircraft utilize a DC powered turn needle. In those aircraft, partial panel flight is required with an AC power failure. The more likely scenario in the T-34 in which one would encounter partial panel flight is with a singular failure of the attitude gyro itself.

When a gyro failure is recognized, transition to partial panel scan and immediately execute the Emergency Procedures for inverter failure. Normally, this will restore power and the maneuver may be continued. For partial panel training, after completing procedures and noting that the OFF flag continues to indicate failure, smoothly level the wings with coordinated rudder and aileron and reposition the nose to the straight and level flight attitude by crosschecking the VSI and altimeter for level flight nose attitude and the turn needle and balance ball for a wings level balanced flight condition. When established and trimmed in straight and level flight, continue partial panel scan (Figure 3-14). Use the turn needle and balance ball for roll and yaw control and the VSI and altimeter for pitch control. Then, make the following voice report to the instructor: "I have a gyro failure; Emergency Procedures completed with negative results; on partial panel scan."

With the failure of the primary attitude instrument, determine the nose and wing positions through the indirect indications of the turn needle and balance ball, airspeed indicator, altimeter, and vertical speed indicator. These instruments now become attitude "control" instruments vice crosscheck instruments. Because of the loss of the attitude gyro’s direct indication of our relationship to the horizon, we must incorporate a certain amount of "feel" in our control pressures in order to establish our nose and wing positions. Necessary control pressures will be recognized through experience in a particular type of aircraft. Excellent trim is mandatory in partial panel in order to relieve these control pressures so that the aircraft will remain in its set attitude.

MANEUVER	ATTITUDE CONTROL INSTRUMENT	PERFORMANCE SCAN	ADDITIONAL SCAN
STRAIGHT AND LEVEL	VSI (Nose) Altimeter Turn Needle (Wing) Balance Ball		
LEVEL TIMED TURNS	VSI (Nose) Altimeter Turn Needle (Wing) Balance Ball	Airspeed Clock	Torque
CONSTANT AIRSPEED CLIMBS AND DESCENTS	Airspeed (Nose) Turn Needle (Wing) Balance Ball	VSI Altimeter	Torque

Figure 3–14 Partial Panel Scan

NOTES

1. The balance ball is included as a wing attitude control instrument in the above scan table. An erect turn needle simply indicates no deviation from heading. For example, with the turn needle erect and the ball deflected from the center, an AOB is indicated (with opposite yaw counteracting the bank; thus, no turn is shown). Therefore, the aircrafts wings are level only when the turn needle is erect and the ball is centered.

2. The scan table above does not show the RMI, as we are assuming a complete loss of AC power.

3. Peripheral vision scanning is essential for smooth partial panel flight.

1. **Scan Summary.** Attitude control instruments:

   a. Focus the scan on the turn needle and balance ball. Regardless of the maneuver being performed, centering the scan on the turn needle/balance ball will provide the greatest opportunity to maintain wing position as you peripherally look for movement of the needles on the altimeter and VSI (straight and level). Once you are focusing on the turn needle and you notice movement on the VSI and/or altimeter, move your scan to the airspeed, then altimeter, VSI, and back to the turn needle/balance ball. Proper wing position is critical to partial panel flight.

b. Scan pattern summary:

Wing Attitude – There is considerable delay in the turn needle. Center the aileron inputs and let the turn needle settle down" when determining wing attitude.
Nose Attitude – If a change in nose attitude instruments is evident, crosscheck the performance instrument(s) and make appropriate attitude/power adjustments. Scan additional instruments with peripheral vision as necessary.

2. **Straight and Level Flight**

a. The "attitude control" instruments for the nose are the VSI and altimeter. The "attitude control" instruments for the wings are the turn needle and balance ball. The airspeed indicator is the performance instrument. Use your peripheral vision to simultaneously monitor the turn needle, VSI and altimeter for movements. The magnetic compass is an additional instrument and will be used only during straight and level, non–acceleration flight.

b. Corrections for altitude will be made with the same smooth control movements made in full panel flight. For example, when the need for a nose attitude change becomes evident from VSI and altimeter, note the amount of change needed. The descent/climb must first be stopped by exerting light (fingertip) control movements, stabilizing the VSI to zero. Any attempt to correct without first stabilizing will result in pilot–induced oscillations of increasing amplitude; causing an out–of–control situation. The key to good partial panel flying is:

i. Intelligent control movements based on observed rates indicated by the instruments.

ii. Patience in returning to altitude and airspeed (remember, pressure instruments lag).

iii. Use of the peripheral scanning techniques.

iv. Proper trim.

When correcting for nose attitude, attention must still be given to the turn needle/balance ball so as not to compound the errors.

c. Corrections for the wing position will be made by exerting light, smooth pressure on the stick to return the turn needle to the center. For example, while scanning the instruments a slight turn is noticed by the turn needle moving away from center. First, stop the movement by centering the turn needle. Remember, the turn needle lags so control inputs must be smooth and light, not large and jerky. Once the turn needle is centered, determine the number of degrees off heading from the magnetic compass. Corrections to return to the desired heading for straight, constant heading flight will be accomplished by using a timed turn.

3. **Rate and Timed Turns**

a. Because of the errors in the magnetic compass, it is more feasible to make timed turns (at Standard–Rate or One–Half Standard–Rate) rather than to attempt to turn on the magnetic compass. Coordination with aileron and rudder is needed rolling in and out of turns to counteract adverse yaw which produces a delay in turn indications on the turn needle. Under actual partial panel instrument conditions, it is desirable that partial panel timed turns do not exceed One–Half Standard–Rate. A Standard–Rate Turn is not recommended because of the high AOB and extreme control pressures necessary, which could cause the turn to become uncontrollable and place the aircraft in an unusual attitude.

b. Timed turns for heading changes of 30º or more will be done at One–Half Standard–Rate. Compute the time to turn in seconds by multiplying the number of degrees to turn by ⅔. Turn using a one–needle width deflection. For turns of 29º of less, turn at ⅔–needle width deflection for a number of seconds equal to the number of degrees to turn. The attitude control instruments for a level timed turn are the same as for straight and level.

c. When rolling into a timed turn, start when the second hand of the clock is at the 3, 6, 9, or 12 positions. Do not use any lead when rolling in or rolling out of the turn.

Begin the roll into the turn when you commence timing and start your rollout at the completion of your timing. Attempt to roll in and out of the turn at a constant rate.

d. Since errors may result from improper timing or use of the turn needle, corrections to heading may be necessary upon completion of the turn. If, after the completion of the first turn, the error is 30º or greater, correct to heading using a one–needle width turn, as above. For errors of 29º or less, use the above procedures for a ⅔–needle width turn.

e. The turn needle tends to lag slightly behind wing movement, because of the inertia of the needle itself. Thus, rate of roll must be smooth and slower than when in full panel to decrease the lag as much as possible. This lag necessitates the need to "lead" the needle. In other words, as the turn needle approaches a needle width deflection (say eight–tenths deflection), stop the wing movement with stick pressure. The needle will continue to deflect to approximately a full needle width. The same holds true when rolling back to wings level.

f. The nose attitude control fundamentals discussed for straight and level flight, partial panel, are applicable here, as these are level turns.

g. **Scan**

Wing Attitude	————	Turn needle/ball
Nose Attitude	————	ALT/VSI
Performance	————	Clock
Additional	————	Magnetic Compass after turn and wings level

h. **Common Errors** (Applicable to straight and level also.)

i. Over controlling the nose–the tendency is to note a climb (or descent) on the altimeter and VSI and slowly displace the stick until the pressure instrument reacts in the opposite direction. Equate the rate of on the VSI to amount of stick movement; move the stick a specific amount and then have the patience to allow the instruments to react.

ii. Not referencing the turn needle during nose corrections.

iii. Not anticipating the "lag" in the turn needle.

4. **Enroute Descent**

a. The partial panel enroute descent is a cruise descent using 500 ft–lbs while maintaining constant airspeed and wings level. The attitude control instruments are turn needle and balance ball for the wing, and the airspeed for the nose.

b. Remember that the absence of the basic attitude instrument (gyro) makes it considerably more difficult to determine the attitude corrections necessary. Extremely light, smooth control pressures must be exerted and perfect trim is required. You will have to "feel" the amount of nose attitude change.

c. Again, we will use the "feel" developed in full panel. For a descent, perform P.A.T., reduce power to 500 ft–lbs torque and lower the nose by releasing back pressure on the control stick. Reduce control pressures with trim tabs as necessary to maintain 150 knots, wings level. While performing P.A.T., scan the turn needle to confirm that the wings remain level during the transition.

d. Add power to approximately 650–700 ft–lbs torque when 100 feet above level off altitude and smoothly raise the nose by applying slight back pressure on the stick. Reduce control pressures with trim tabs as necessary to maintain normal cruise.

e. **Scan**

Wing Attitude	————	Turn needle/ball
Nose Attitude	————	Airspeed
Performance	————	Altimeter/VSI
Additional	————	Torque

f **Common Errors**

i. Improper P.A.T. principle usage.

ii. Not "moving" the stick to a position and stopping it, but instead moving the controls until the instruments react.

iii. Not scanning turn needle during transitions or airspeed corrections. There is no immediate need to reference the pressure instruments when correcting; they will not indicate a positive reaction immediately.

314. UNUSUAL ATTITUDES (PARTIAL PANEL)

1. It is of extreme importance during actual instrument flight that the pilot not allow himself to get into a situation which could result in an unusual attitude on partial panel. It is sometimes difficult to visualize, through the partial panel instruments, either the nose attitude or the wing position. For example, beyond a two–needle width turn where the needle is pegged, there may exist a higher rate of turn or a continuous roll.

2. The unusual attitudes will be entered in a smooth and coordinated manner from normal cruise. The instructor will not exceed the following limitations on entry.

a. Fifty degrees nose high.

b. Forty degrees nose low.

c. A two–needle width deflection on the turn needle.

3. The recovery procedures are as follows:

a. Hold the stick pressure as you recognize whether nose high or nose low by the actions of the airspeed indicators; wing position by the turn needle.

b. At this time, if the airspeed is approaching 200 knots, reduce power to idle, crosscheck the altimeter and VSI.

c. Using smooth coordinated rudder and aileron, center the ball, then level the wings on the turn needle.

d. Smoothly and slowly relax stick pressure as necessary to stop the airspeed as you keep the ball centered and wings level.

e. When the airspeed is stopped, shift your scan to the turn needle balance ball and the VSI. Keep the ball centered and the wings level as you adjust nose position until the VSI stabilizes at "0". If you had previously reduced the power on recovery (nose low), reset normal cruise power approaching 150 knots.

4. **Common Errors**

a. Rolling wings level rapidly and overbanking in the opposite direction. Remember to "lead" the turn needle by stopping the wings prior to the needle completely centering.

b. Not stopping the airspeed.

c. Not allowing the VSI and altimeter to stabilize prior to making the next nose correction.

d. Chasing the altimeter and VSI.

e. Forgetting to reset normal cruise power if you had previously reduced to idle during nose low recovery.

315. DIRECT TO A VOR OR TACAN

1. **TUNE** and identify the station.

a. Ensure that you have avionics control (Inform the IP if you intend to TAKE avionics command). Set the desired frequency or channel. If using TACAN, ensure you are tuned to the "X" band of the desired channel.

b. Place the appropriate audio switch forward on the audio panel until the station is positively identified, then turn the switch off.

NOTE

A TACAN station identification occurs only every 35 seconds. If you do not know the Morse identification, ask your instructor.

c. Ensure the appropriate NAVAID is selected using the TOGGLE switch below the altimeter.

2. **TURN** to place the single needle (VOR) or double needle (TACAN) under the heading index of the RMI.

3. **TWIST** the Omni Bearing Selector knob in the CDI (labeled OBS) until the CDI centers with a white flag under "TO" in the TO/FROM indicator. The course under the index in the CDI with the CDI centered is the current course direct to the station.

4. **TALK**: Report course to your instructor. The maneuver is now complete.

316. VERTIGO DEMONSTRATION

Vertigo can be defined simply as a body sensation which tells the aviator that his aircraft is in a particular attitude, when the aircraft is actually in an entirely different position relative to the horizon. This false sensation is derived from a number of sources: the inner ear and vestibular stimulation, for example.

Vertigo usually does not occur when a pilot has visual reference to the horizon, or at least, the pilot pays little attention to his body feelings, since his sight simply overcomes them. Disorientation occurs when there is no reference to the horizon; however, this does not necessarily limit vertigo to flying in the clouds. It can occur when the aircraft is VFR, on a day

when there are large buildups, when flying above a layer of clouds, when flying in and out of a broken layer, or when launching at night with no clear horizon. Vertigo or the disorientation sensation is and always will be a factor in aviation, but is dangerous only when the pilot believes and flies his senses instead of the reliable instruments.

The vertigo training in the T–34C will demonstrate and emphasize three specific facts:

1. A pilot's attitude sensations are generally unreliable.

2. Sensations being unreliable, the pilot cannot recover to straight–and–level flight using these sensations.

3. The instruments are the only reliable way to recognize and recover from any unusual attitude.

The first objective, which is to prove senses unreliable, is accomplished on the first flight in Basic Instruments. The instructor will fly the aircraft through a series of smooth, easy maneuvers while the student remains unhooded with his eyes closed. The student gives a running commentary of his sensations over the ICS. When disorientation is evident, the student will be informed to open his eyes and check his attitude. This will vividly emphasize the unreliability of body feelings.

It should be noted that "eyes closed" simulates inattention to the instruments, which may occur any time a pilot is tuning radios, checking maps, or attempting to maintain VFR scan in marginal conditions. The maneuvers performed are smooth and constant, producing the typically smooth, insidious vertigo. They are not the accustomed violent maneuvers usually associated with unusual attitudes which produce an immediate indication of abnormal flight. Instead, the simulated inattention induces real disorientation. The maneuvers or the recoveries from them will not be graded. It is the intention of the demonstration to emphasize the seriousness of vertigo. The student's susceptibility to vertigo (or his immunity) is in no way being evaluated.

Fatigue, turbulence, dim lighting, and IFR conditions all contribute to the onset of vertigo.

THIS PAGE INTENTIONALLY LEFT BLANK

CHAPTER FOUR
INTRODUCTION TO RADIO INSTRUMENTS

400. INTRODUCTION

In the Radio Instrument (RI) Stage of your Navy flight training, you will be introduced to the elements of Instrument Navigation. The Contact and Basic Instrument Stages of your training equipped you with basic flying skills. In RI, these skills will be further refined and built upon to enable you to accomplish a specific objective – to navigate from one point to another.

You will learn to depart one airfield, navigate the airways and maneuver the aircraft for a landing at your destination – all on instruments. This will require you to maintain a constant awareness of your geographical position by operating and interpreting the radio instruments in the T–34C.

You will also practice flight planning and the standard procedures for communicating with Air Traffic Control (ATC) agencies.

In order for you to learn what you need about Radio Instruments, it will be necessary to be thoroughly familiar with this FTI. In addition, you should consult other sources of information including but not limited to:

NATOPS Instrument Flight Manual (NIFM)
T–34C NATOPS
Flight Information Publications (FLIP) (Departure Procedures, Standard Terminal Arrival (STAR), Approach Plates, IFR Supplement, Flight Information Handbook (FIH)
Aeronautical Information Manual (AIM)
FAA Air Traffic Control manual 7110.65
Federal Aviation Regulations (FAR) Part 91

401. FUNDAMENTALS OF INSTRUMENT NAVIGATION

In order to obtain a thorough understanding of the procedures discussed later in this manual and to navigate properly on instruments, you must be able to "see" your position in relation to a Radio Navigational Aid by proper use of your instruments. To visualize the aircraft position, you need a thorough knowledge of the navigational instruments, how they function, and what they depict. The remainder of this section will provide a brief review of Radio Instrument orientation. For a more comprehensive review, consult the workbook from your Instrument Flight Rules course.

The Radio Magnetic Indicator (RMI) is the most valuable instrument in the T–34C for maintaining orientation. You are already familiar with one function of the RMI. That is, by checking the number beneath the heading index, at the top of the instrument, you are able to determine the aircraft’s magnetic heading.

The RMI has an additional function, which allows the pilot to determine his/her position relative to a selected VOR or TACAN station. The combination of both functions in one unit makes the RMI the primary navigation instrument in the T–34C.

In addition to a compass card, the RMI contains two bearing pointers referred to as needles: one for the VOR and one for the TACAN or GPS. The head of each needle points to the selected station and the tail of the needle indicates the position of the aircraft from the station in terms of radials. Assuming all equipment is working properly, each needle (VOR, TACAN, or GPS) indicates both relative and magnetic bearing concerning its associated station or selected GPS waypoint.

Figure 4–1 illustrates the means by which the VOR station is used for navigation. (Note: In this example, only the single bar VOR needle will be considered.)

The lines extending from the VOR station in Figure 4–1 represent radials. The equipment in the aircraft interprets the signals received from the station and displays this information on the RMI so that you, the pilot, can then determine the aircraft position relative to the VOR station.

In this example, the aircraft is flying a heading of 360º. The tail of the VOR needle is on the 210º mark of the RMI indicating a position southwest of the VOR on the 210º radial. In relative terms, the VOR station is 30º to the right of the aircraft's nose.

The previous example concerned RMI indications with the aircraft at a fixed position. Let us now consider the changes in RMI indications produced by a moving aircraft. (Note: The following examples assume no–wind conditions.)

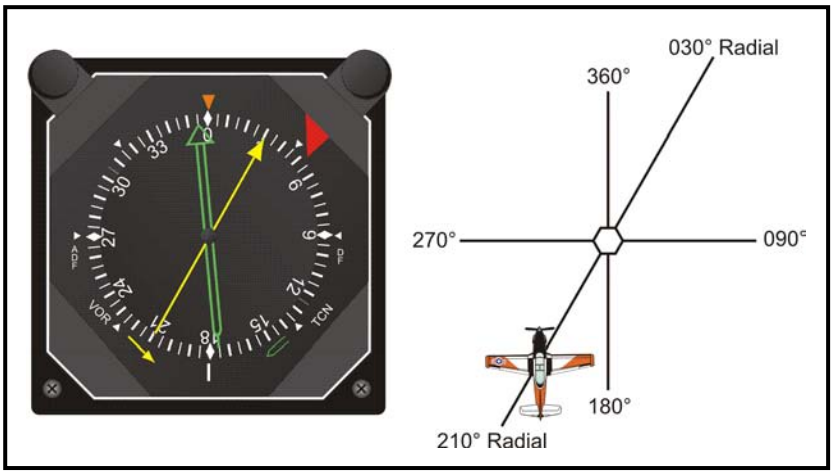

Figure 4–1 VOR Navigation

When flying either directly inbound to or outbound from a NAVAID, you will be maintaining a constant course and staying on the same radial. In Figure 4–2, aircraft "A" is flying inbound to the NAVAID with a heading of 135º. The position of the aircraft is northwest of the NAVAID on the 315º radial. It stays on the same radial despite the fact that its geographical position changes (comes closer to the station).

4-2 INTRODUCTION TO RADIO INSTRUMENTS

Aircraft "B" in Figure 4–2 is outbound from the NAVAID with a heading of 225º. Again, the geographical position changes but the aircraft remains on the 225º radial.

If you fly a heading which does not take you inbound or outbound, your position relative to the NAVAID will change. In Figure 4–2, while maintaining a heading of 360º, aircraft "C's" position changes from southeast of the NAVAID on the 135º radial to northeast on the 45º radial.

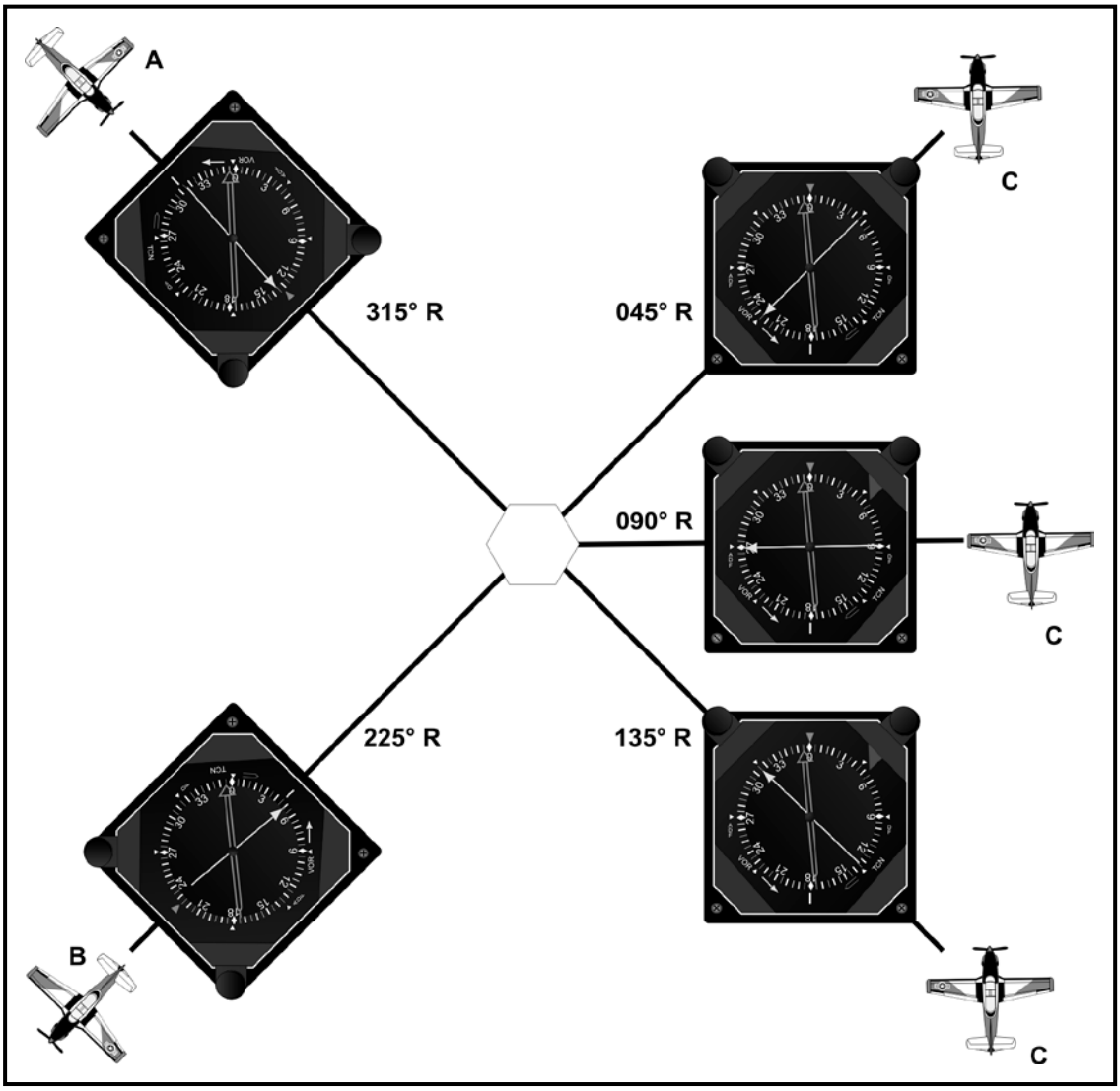

Figure 4–2 RMI Orientation

Figure 4–2 illustrates two important principles.

1. The tail of the needle always indicates which radial the aircraft is on.

2. Maintaining a constant heading (other than directly to or from a NAVAID), the tail of the needle rises and the head falls (assuming no–wind conditions).

402. T–34C NAVIGATION SYSTEMS

This section will provide an overview of the navigation equipment installed in the T–34C. It is not within the scope of this manual to address these systems in detail. It is strongly suggested that you consult the indicated references for specific information.

The T–34C is equipped with three navigation systems. The VOR (OMNI) receives its signal from VOR ground stations operating in the VHF range. The TACAN receives its signal from TACAN ground stations operating in the UHF range. Often both stations are co–located in "VORTAC" facilities. The third system is the KLN900 GPS, which receives its signals from globally positioned satellites and is covered in Chapter Seven.

First you will learn VOR navigation and later be introduced to TACAN; the main difference being Distance Measuring Equipment (DME) associated with the TACAN allows precise determination of your position utilizing a single NAVAID. Lastly, you will be introduced to GPS navigation.

403. VHF OMNIDIRECTIONAL RANGE (VOR)

Reference: T–34C NATOPS, Chapter 19, VOR Receiver (VIR–30A); NIFM Part V, "VHF Omnidirectional Range (VOR);" AIM Chapter 1, Section 1, "VHF Omnidirectional Range."

The VOR is a navigation system which operates in the VHF frequency range (108.00 to 117.95 MHz). VOR course information is not affected by lightning or other types of severe weather; however, reception is limited by line of sight. Normal reception range is 40–45 NM at 1000 feet AGL and increases with altitude. VOR provides azimuth information only, with accuracy being generally plus or minus 1º.

Most VORs are equipped for voice transmission on the VOR frequency. The only positive method of identifying a VOR is by its Morse Code identification or the recorded automatic voice identification.

Example: digitized/recorded voice speaking "Crestview VOR" alternating with Morse Code identifier.

Never rely solely on identification from voice transmissions by the Flight Service Station (FSS) or approach control facility, because many FSS remotely operate several omni ranges.

The T–34C is equipped with the VIR–30A VOR receiver. This receiver is located in the avionics compartment. It is controlled by a receiver control box which is part of the multifunction panel in each cockpit (Figure 4–3). VOR information is displayed on the VOR needle (single bar) of the RMI (Figure 4–6).

404. TACAN

Reference: T–34C NATOPS Manual, Chapter 19, "TACAN Radio (TCN–40)"; NIFM Part V, "Tactical Air Navigation (TACAN)"; AIM, Chapter 1, Section 1, "Tactical Air Navigation (TACAN)."

Tactical Air Navigation is used for airways Flight and Instrument approaches and for tactical control of aircraft. TACAN is a navigational aid which provides azimuth and slant range distance (DME) information to the pilot, enabling precise fixing of geographical position at all times. TACAN stations operate in the UHF range (962 to 1213 MHz), are selected by dialing one of 252 "X" or "Y" channels, and are identified by an aural Morse Code repeating every 35 seconds. As with VOR, reception range is limited by line of sight and is not affected by weather. Most airways in the United States are defined by combination VOR and TACAN stations (VORTAC), which provide VOR and TACAN azimuth and TACAN distance (DME) at one site. The VOR portion of the facility is identified by a coded tone modulated at 1020 HMz or a combination of tone and voice. The TACAN is identified by a coded tone modulated at 1350 HMz, transmitted one time for each three or four times that the VOR is transmitted. DME furnishes reliable, line of sight, SLANT RANGE information at distances up to 199 NM with an accuracy of 2 mile or 3% of the distance, whichever is greater.

The T–34C carries the TCN–40 TACAN unit. As with the VOR, the receiver is located in the avionics compartment and controlled by a receiver control box in the multifunction panel (Figure 4–3). TACAN information is displayed on the TACAN needle (double bar) of the RMI (Figure 4–6). Additionally, distance information is displayed on the NACWS in each cockpit (Figures 4–4 and 4–5).

405. NACWS

Reference: T–34C NATOPS Manual, Chapter 19, "Naval Aircraft Collision Warning System (NACWS 991)."

The Naval Aircraft Collision Warning System (NACWS) is a collision warning system used to alert the pilot to other aircraft that are, or are likely to become, a threat of midair collision. The system is based on a passive or non–transmitting mode of operation enhanced by an active mode of operation. The NACWS equipment consists of a Transmitter/Receiver/Computer (TRC), two Control/Display Units (CDU) (Figures 4–4 and 4–5), an Extended Remote Rack, two L–Ban Antennas, and a Global Positioning System (GPS) antenna. The NACWS start–up self–test is automatically initiated when the NACWS is turned on.

On the Primary DME screen (Figure 4-4), the NACWS displays heading, DME, date, Zulu time, range scale, and LAT/LONG.

On the proximity screen (Figure 4-5), the NACWS displays heading, DME, selected range scale and potential threats.

NOTE

When a "threat" is identified by NACWS, and you are on an IFR flight plan or under positive control of ATC, inform the controller immediately before maneuvering.

WARNING

Deviating without approval of the ATC on an IFR flight plan may place the aircraft below established ATC separation or altitude minimums. Once a deviation without ATC approval is initiated, the pilot assumes all separation and obstacle responsibilities.

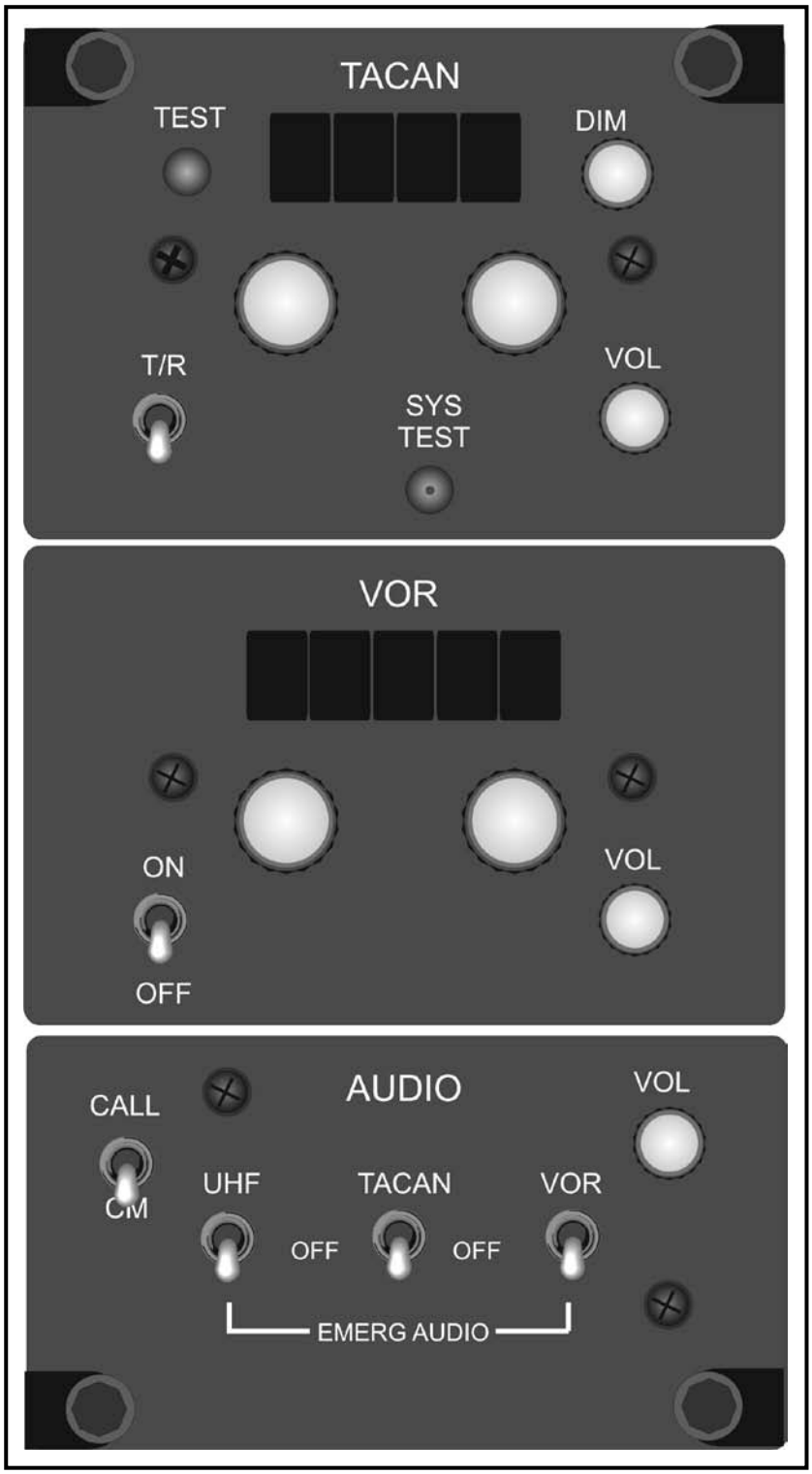

Figure 4–3 TACAN, VOR, and Audio Box

Figure 4–4 NACWS Primary DME Screen

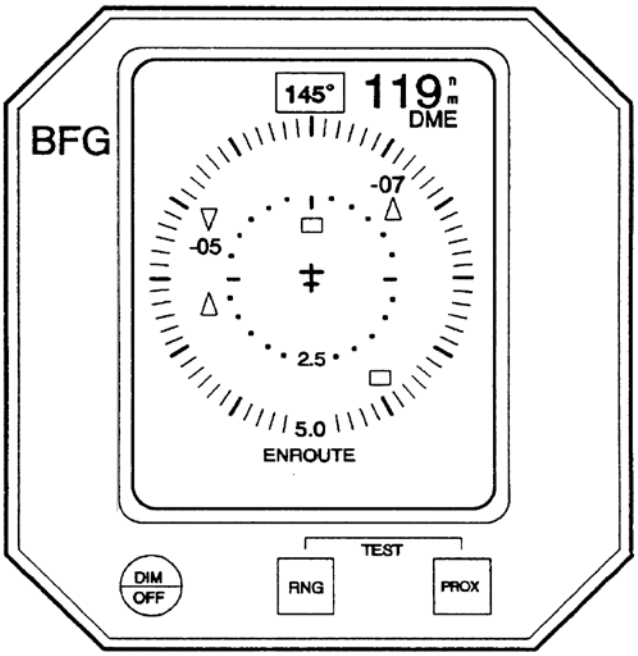

Figure 4–5 NACWS Proximity Screen

406. RADIO MAGNETIC INDICATOR (RMI)

Reference: T–34C NATOPS Manual, Chapter 19, "Radio Magnetic Indicator (332C–10B)," NIFM Part III, "Radio Magnetic Indicator (RMI)."

The Radio Magnetic Indicator (RMI) is the primary navigational instrument in the aircraft. It displays aircraft heading in addition to magnetic bearing information from radio stations through the use of pointers referred to as the VOR and TACAN/GPS (depending on mode selected on GPS NAV/GPS button) needles (Figure 4–6).

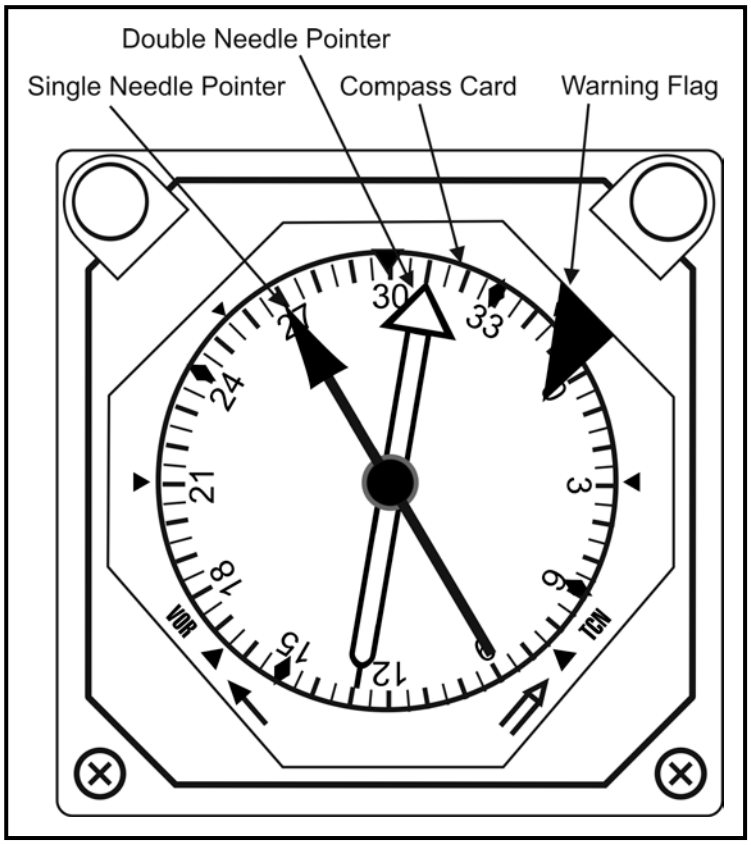

Figure 4–6 Radio Magnetic Indicator (RMI)

407. COURSE DEVIATION INDICATOR (CDI)

Reference: T–34C NATOPS, Chapter 19, Course Deviation Indicator (IND–350); NIFM Part III, "Course Indicator."

The IND–350 is the secondary navigational instrument in the VOR/TACAN system and serves as an aid in interpreting the RMI. Its components consist of a Course Deviation Indicator (CDI), a TO–FROM indicator, an OBS (Omni Bearing Selector), and a VOR/TACAN selector switch.

The IND–350 shows the aircraft's actual course of flight in relation to a selected course. The selected course is set with the OBS knob. The course deviation indicator (vertical bar) will be centered if the aircraft is actually on the selected course. For an off course condition the bar will be displaced to one side or the other. The TO–FROM indicator shows whether the selected course, if flown, will take you TO or FROM the station. The VOR/TACAN switch enables the pilot to select VOR or TACAN information for display on the CDI. The IND–350 provides an immediate and simple presentation of course deviation and is an excellent reference for maintaining desired course. Its use is highly recommended for tracking along airways or on approaches. If both the IND–350 and the RMI are operating and a course discrepancy is noted between them, the RMI indication is more reliable. (See Figure 4–7 for an illustration of the IND–350)

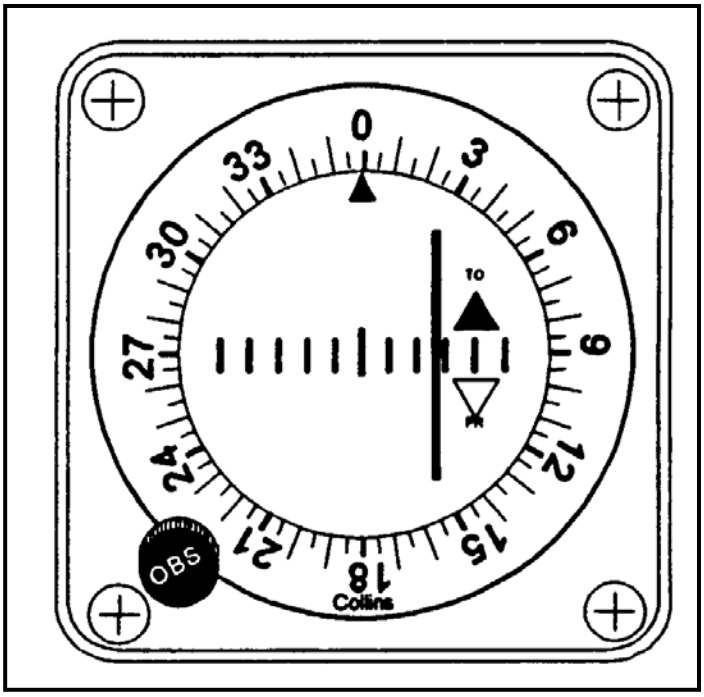

Figure 4-7 IND-350

With a VOR frequency selected in the VOR and the IND–350 selected to the "VOR" position, each "mark" indicates 2º of deviation with a full scale deflection of ± 10º from CDI centerline. With an ILS/Localizer frequency selected in the VOR and the IND–350 selected to the "VOR" position, each "mark" indicates 1/2º of deviation with a full scale deflection of ± 2½º from CDI centerline.

NOTE

If there is a discrepancy between the RMI and CDI needles, rely on the RMI needle.

408. TRANSPONDER

Reference: T–34C NATOPS, Chapter 19, Transponder (TDR–950); Part VI, IFF/SIF.

Although it is considered a piece of identification equipment the transponder (Figure 4–8) will be discussed here since it is used in conjunction with navigation equipment.

The transponder set is an identification, position tracking, and emergency tracking device. An operating transponder receives, decodes and responds to interrogation by search radar.

Use of the transponder involves the setting of proper codes, setting the function selector to the desired mode of operation and use of the reply/ident button.

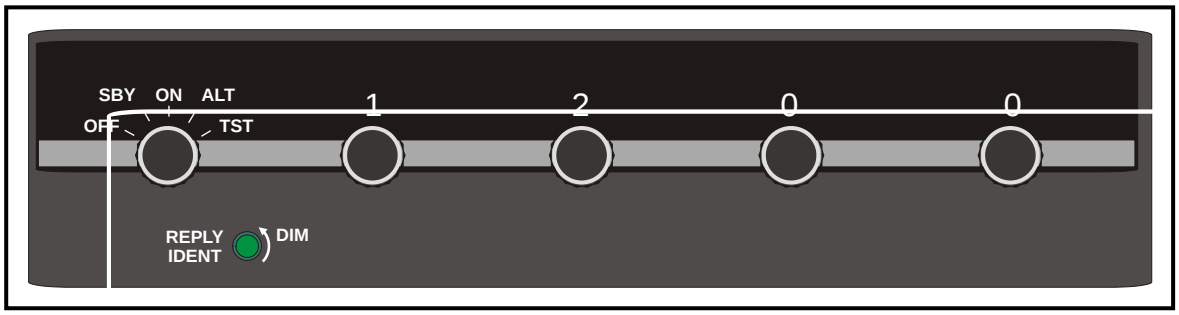

Figure 4–8 Collins Transponder

Each code selector switch is used to set a digit 0 through 7. The function switch can bring the unit from an OFF to a STANDBY condition. In the ON position the unit is in operation, without the altitude encoding function. Placing the switch in the ALT position enables this function. In the TEST position illumination of the reply lamp indicates operational capability.

The reply/ident button will flash on and off in response to interrogation by radar. This occurs in the ALT or ON mode. The intensity of the flashes can be controlled by rotating this button. If the button is depressed while in the ALT or ON Mode the reply lamp will light for approximately 20 seconds. At the same time the radar operator will see a distinct reply on his scope which facilitates identifying your aircraft.

409. BASIC CONFIGURATIONS

Basic airspeeds and configurations used in executing the various Radio Instrument Procedures are listed below.

CRUISE CONFIGURATIONS:

Fast Cruise

1. 170 knots
2. Approximately 750–800 ft–lbs

3. Nose attitude: approximately 1½º down

Normal Cruise

1. 150 knots
2. Approximately 600–650 ft–lbs
3. Nose attitude: 0 degrees

Slow Cruise

1. 120 knots
2. Approximately 450–500 ft–lbs
3. Nose attitude: approximately 1½º

NOTE

Initiate transition to slow cruise by reducing power to 300 ft–lbs.

DESCENTS:

Cruise Power Descent

1. 250 knots maximum
2. Cruise power setting

Terminal Descent – Used when in contact with your destination approach controller and in the terminal phase of flight.

1. Cruise airspeed
2. 300 ft–lbs

Shuttle Descent. Used in holding.

1. 120 knots
2. 300 ft–lbs

CLIMBS:

Climbs over 1000 feet

1. Maximum allowable power
2. 120 knots
3. Nose attitude: Approximately 6–8 degrees up (initially 12–15 degrees up until airspeed approaches 120 knots).

4-12 INTRODUCTION TO RADIO INSTRUMENTS

Climbs of 1000 feet or less

1. Maximum allowable power
2. Cruise airspeed

APPROACH CONFIGURATIONS:

Basic Approach Configuration (BAC)

1. 120 knots
2. Gear down, flaps up
3. Approximately 650–700 ft–lbs
4. Nose attitude: approximately 2º up

Final Approach Configuration (FAC; performed on GCA approaches)

1. One hundred knots
2. Gear down, flaps down
3. Approximately 650–700 ft–lbs
4. Nose attitude: 0 degrees

NOTE

If a descent is required, during or after BAC/FAC, reduce power to 450 ft–lbs and lower the nose to maintain airspeed.

410. INSTRUMENT COMPARISON CHECK

When established in the enroute phase of flight the instructor will take control of the aircraft and maintain altitude, heading, and cruise airspeed. The student will read the following indications to the instructor.

1.	Attitude Gyro	5.	VSI
2.	RMI	6.	Turn Needle/Balance Ball
3.	Airspeed	7.	Torque
4.	Altimeter	8.	Current Time

Deviations in instrument readings will be considered during maneuver evaluations.

411. THE 6 TS

The 6 Ts are a memory jogger for the pilot to use at various points during flight to remind the pilot to execute certain procedures. These points may be: Initial Approach Fix (IAF), station passage, Final Approach Fix (FAF), and Missed Approach. The 6 Ts are:

1. **Time** – note time / start clock / as required.
2. **Turn** – to course / as required.
3. **Time** – note time / start clock / as required.
4. **Transition** – to BAC / reduce speed / descend / as required.
5. **Twist** – CDI to desired course / as required.
6. **Talk** – report to ATC position / time / intentions / configuration / as required.

CHAPTER FIVE
RADIO INSTRUMENTS COMMUNICATIONS

500. INTRODUCTION

Reference: FIH Section B, "Position Reporting Procedures"; AIM, Chapters 4 and 5; FAA Manual 7110.65.

In Radio Instruments (RI) you will be introduced to the non–radar and radar environment. Since radio communications will change somewhat depending upon which environment you are flying in, it is important to know which format applies.

If informed by ATC that you are in "Radar Contact**,"** then the radar environment radio procedures are appropriate. This call is normally made on initial contact with departure control after takeoff. In the absence of this advisement from ATC, or if informed "Radar Contact Lost" or "Radar Service Terminated" then non–radar environment radio procedures apply.

NON–RADAR ENVIRONMENT – Your first four primary RI simulators will be flown in a non–radar environment. Keep in mind, while you are flying in a non–radar environment ATC cannot track your position using radar. Therefore, position reports will be required to inform ATC of your position and when you expect to arrive at the next point. The PTAPTP format (**P**osition, **T**ime, **A**ltitude, Next **P**osition, E**T**A at Next Position, following **P**osition) provides the required information to ATC.

NOTE

> Position reports are given at compulsory reporting points for flights conducted along airways. They are also given when requested by ATC, regardless of whether it is a compulsory reporting point. For flights conducted off airways the report is given for each point used in the flight plan.

RADAR ENVIRONMENT

1. The radar environment has three major advantages for the pilot:

   a. It affords more expeditious routing in high density traffic areas.

   b. It enables controllers to alert pilots to potential in–flight hazards.

   c. It reduces the frequency and complexity of voice reports.

2. There are also two disadvantages:

   a. It can lead to overreliance on ground controllers for navigational assistance.

b. It can result in a "dead–end" clearance (i.e., a vector assigned without explanation)

These disadvantages can be minimized by following two simple rules:

1. Always know what the vector is meant to achieve when it takes you off your previously assigned route. The controller should specify this (e.g., "Vector to join V–198 at PENSI," "Vector to Crestview," "Vectors around traffic," "Vectors for noise abatement.")

2. Keep yourself oriented on the RMI using VOR/TACAN and be prepared to navigate in accordance with your most recent clearance in the event you lose communications or are instructed to "Resume Own Navigation . . ."

NOTE

"Radar contact" does not mean the controller is providing terrain and obstacle clearance; ATC does not guarantee terrain or obstruction clearance until you are on vectors.

Radar facilities can provide other services upon request. They can verify the accuracy of questionable aircraft NAVAIDS by providing airway centerline checks (e.g., "Radar shows you five miles south of V–4."), provide position reports over fixes and in some cases, radar can provide vectors around severe weather.

NOTE

Center or approach radar should be used for severe weather avoidance. The ability of such radar to detect severe weather is not, however, uniform site to site.

When told you are in "radar contact," the controller knows exactly where you are. Therefore, you should discontinue position reports.

The majority of your flights throughout your career will be in a radar environment; therefore, the majority of your training will be conducted using radar environment radio communications. On I2205, you will be introduced to the radar environment and its associated radio calls, and you will practice them throughout the remainder of your primary RI training.

501. GENERAL RADIO COMMUNICATIONS REQUIREMENTS

1. The following reports should be made without a specific request from ATC:

a. **At all times:**

i. When vacating any previously assigned altitude/flight level for a new altitude/flight level.

ii. When unable to climb/descend at a rate of at least 500 FPM.

iii. When a Missed Approach has been executed.

iv. If an altitude change will be made when operating on a clearance specifying "VFR conditions on top."

v. When changing TAS by 5% or 10 knots (whichever is greater) from that filed in the flight plan.

vi. The time and altitude upon reaching a holding fix or a point to which cleared.

vii. When leaving any assigned holding fix or point.

viii. Any loss in controlled airspace of VOR or TACAN receiver capability, complete or partial loss of ILS receiver capability, or impairment of air/ground communications capability.

ix. When encountering weather conditions which have not been forecast, or hazardous conditions which have been forecast.

x. Any information relating to the safety of flight.

b. When not in radar contact:

i. Items "i" through "x" above.

ii. Position reporting.

iii. A corrected estimate at any time it becomes apparent that an estimate as previously submitted is in error in excess of three minutes.

iv. FAF inbound on final approach.

2. In addition to the previous requirements, you should comply with any additional reports requested by ATC whether in a radar or non–radar environment. Some of the requests you may expect on occasion follow. ATC may ask you to:

a. Report reaching or passing a specific altitude.

b. Report "VOR outbound."

c. Report "Procedure Turn inbound."

d. Report the field in sight.

e. Report a specific fix or intersection.

502. SAMPLE RADIO COMMUNICATIONS

The following are examples of both radar and non–radar voice reports; however, it is not possible to cover every possible radio communication that may occur. It is up to the pilot to maintain a careful listening watch of the radio and comply with instructions given by ATC. If you are in doubt or confused by any instructions ATC gives you, request clarification immediately.

1. CLEARANCE DELIVERY

"Key West Clearance Delivery, Navy 3E123, IFR to Tampa International, clearance on request."

2. GROUND CLEARANCE

NOTE

Obtain ATIS information, if available, and include its alphabetic identifier in your initial call to Ground Control. If ATIS is unavailable, state request…with negative information.

"North Whiting Ground, Navy 3E123, taxi, IFR to Mobile Regional with information Charlie, clearance on request."

NOTE

If you have already obtained your IFR clearance from a clearance delivery, your ground call would be:

"North Whiting Ground, Navy 3E123, taxi, with information Alpha.."

3. TAKEOFF CALL

"North Whiting Tower, Navy 3E123, Takeoff."

4. OFF REPORT

"Pensacola Departure, Navy 3E123, off North Whiting, passing 1200 for 4000."

5. INITIAL CONTACT WHILE ENROUTE

a. Radar Environment

"Mobile Approach, Navy 3E123, level 4000."

If in a climb or descent, then the call will include the altitude passing and altitude climbing or descending to:

"Mobile Approach, Navy 3E123, passing 3200 for 6000."

b. **Non–Radar Environment**

"Mobile Approach, Navy 3E123, GIMLI, level 4000, estimating LOXLY at 35."

If in a climb or descent, then the call will include the altitude passing and altitude climbing or descending to:

"Mobile Approach, Navy 3E123, estimating LOXLY at 35, passing 3200 for 6000."

6. INTERSECTION

a. **Radar Environment**

NOTE

Only report an intersection in the radar environment if ATC has specifically requested it.

"Mobile Approach, Navy 3E123, LOXLY."

b. **Non–Radar Environment**

NOTE

For discussion purposes, assume that the points referred to in the following radio transmission are compulsory reporting points.

"Mobile Approach, Navy 3E123, LOXLY, 35, 6000, ZUGTI at 37, SEMMES next." (PTAPTP format)

7. ALTITUDE CHANGE

"Mobile Approach, Navy 3E123, leaving 6000 for 3000."

8. CONTACTING APPROACH

Get the latest weather observation for your destination prior to contacting approach control if available. This may be done via use of ATIS/AWOS/ASOS information via UHF, VHF, or VOR. If you need to change frequencies on the radio in use in order to get the latest weather information, you must request the frequency change from the controller. Report back on the same frequency after obtaining the information.

"Mobile Approach, Navy 3E123, request off frequency for one minute, will monitor guard and report back up."
Check in with approach control with the appropriate ATIS alphabetic identifier, or if unable to

get the current information, check in with "negative information.

"Mobile Approach; Navy 3E123; level 3000; Information "Alpha"; with a request."

NOTE

ATC is required to provide weather information if the pilot does not report having the current ATIS and the weather is below 1000 feet ceiling and 3 NM visibility.

After the controller replies, make your approach request. The pilot may request either:

a. A specific approach, i.e. TACAN 1 RWY 23, VOR–B, or ILS 14.

b. A "non–specific" type of approach, i.e. a "VOR approach." If subsequently "Cleared for a VOR approach" where there is more than one VOR approach for the airport, the pilot may accomplish any VOR approach.

"Mobile Approach, Navy 3E123, request an ILS at Mobile Regional."

NOTE

For multiple approaches provide the controller with all of the requested approaches separated with "followed by", and how the approach will terminate, either as a full stop landing or "continue" on flight plan route.

"Mobile Approach, Navy 3E123, request the ILS Rwy 17 at Mobile Regional, followed by the VOR–A, full stop."

9. **HOLDING** ***(entering and leaving)***

"Mobile Approach, Navy 3E123, holding at Semmes, 47, 3000."

"Mobile Approach, Navy 3E123, departing holding."

10. **FAF INBOUND**

a. Radar Environment

This report is required only if requested by ATC. However, it is a good place to provide the "gear down" report. Use the same format as the non–radar environment call.

b. Non–Radar Environment

"Mobile Regional Tower, Navy 3E123, Final Approach Fix, gear down and locked."

NOTES

1. The name of the FAF may be used, if one is indicated (i.e., "Semmes" is the name of the IAF and the FAF for the VOR–A at Mobile Regional).

2. It is the pilot's responsibility to give a "gear down" report after lowering the landing gear prior to landing. The "FAF INBOUND" report is a good place to accomplish this.

11. MISSED APPROACH

"Mobile Regional Tower, Navy 3E123, missed approach, state reason."

Reasons for the Missed Approach may include "runway not in sight" or "lost course guidance."

When Tower turns you over to the approach controller, inform ATC of the Missed Approach with your intentions.

Intentions may include:

a. Request the same approach.

b. Request a different approach.

c. Request clearance to your alternate using the DRAFT format.

d. D-Destination, R-Route, A-Altitude, F-Fuel Remaining, T-Time Enroute.

"Mobile Approach, Navy 3E123, request my alternate Navy North Whiting, via Direct, Altitude 5500, 1+00 Fuel Remaining, 0+20 Time Enroute."

12. MALFUNCTION REPORTS

FAA regulations require a malfunction report be rendered when operating in controlled airspace under IFR. The pilot in command shall report immediately to ATC any in–flight malfunctions of navigational or air/ground communication capability. Each report shall include the following:

a. Aircraft identification.

b. The equipment affected.

c. The degree to which capability of the pilot to operate IFR in the ATC system is impaired.

d. The nature and extent of assistance desired from ATC.

NOTE

The exact nature and degree of assistance available from the ATC system will vary considerably. It is therefore essential the pilot inform the controller of the assistance needed. If no assistance is required, normal handling may be expected. If special handling is requested, the ATC controller will provide the maximum amount of assistance, consistent with the equipment at his disposal and the proper performance of his control functions with respect to other IFR aircraft. Should the circumstances warrant greater attention and priority handling with respect to other IFR aircraft, the pilot should then declare an emergency.

"Miami Center, Navy 6E626, be advised my TACAN is inoperative. No assistance required, navigating VOR only."

"Pensacola Approach, Navy 4F417, be advised my TACAN and VOR have failed. Request radar vectors for a PAR (or ASR) approach to Sherman Field."

CHAPTER SIX
RADIO INSTRUMENT FLIGHT PROCEDURES

600. INTRODUCTION

As you have probably realized by now, RIs will be one of the more demanding stages of your training, and will require much study and concentration. Here, especially, a thorough working knowledge of procedures is essential to your success on instructional flights. However, you must go beyond rote memorization of procedures and strive for a clear understanding of each maneuver before you get into the cockpit and fly the maneuver for the first time. Remember, the knowledge gained in this stage of your training will be utilized time and time again as you progress through the training command and in your operational flying.

As important as RI procedures and concepts are, you must be aware of your priorities while in flight. **Remember the golden rule, "Aviate, Navigate, Communicate."** Perform these functions in that order. In other words, maintaining desired flight parameters (heading, altitude, airspeed, etc.) and monitoring aircraft systems performance should be your first priority. Do not become preoccupied with navigation at the expense of basic airwork. It would be pointless to have a precise plot of your position if you accidentally stalled the aircraft while making this plot. Remember, "Fly the aircraft first."

Navigating your aircraft properly has a higher priority than communicating. To make the reasoning behind this clear, consider the following. During many flights there are points when just flying and navigating properly takes all of your concentration. Attempting to engage in radio communications at this point could overload you to the point of making errors in your flying and navigating. This is not to say that necessary radio transmissions should be omitted or delayed excessively. However, a slight delay in reporting your flight situation is preferable to ending up in a bad situation because you overloaded yourself with communication tasks.

TURN RULE. Maneuvering turns of more than 30º in Instrument Flight are made at standard rate or 30º AOB, whichever occurs first. For turns of 30º or less, never use an AOB more than the number of degrees to turn (i.e., 10º heading change – do not use over a 10º AOB).

A STUDY HINT. The RI FTI contains several procedures such as "6 Ts," and the sector rules for Holding Entry, etc. which are devised to organize your time in the airplane and to jog your memory. But alone, they will not carry you far. Look for the underlying principles and never lose sight of the big picture, the end result or objective of each maneuver. Visualize your track over the ground. Each type of maneuver you fly in RI has a direct "real world" application; none is done just for the sake of a basic airwork exercise.

601. INSTRUMENT/EQUIPMENT CHECKOUT

Prior to each flight it is essential that all instruments and equipment be checked for proper operation. Prior to the runup area, the student will have completed the Instrument Checklist and will report to the instructor,

"Instrument Checklist complete, O_2 100%, blinker operating normally, altimeter error less than 75 feet, NAVAIDS tuned and checked."

1. Hood installed and operating properly.
2. Rudder pedals and seat adjusted.
3. Airspeed indicator reading zero.
4. Altimeter set.
5. RMI aligned and slaved.
6. Clock set and running.
7. Attitude gyro erect and adjusted.
8. VSI reading zero.
9. Oxygen equipment checked and blinker operating.
10. Battery switch ON.
11. Inverter switch to #1 inverter.
12. Attitude gyro remains erect in turns.
13. RMI tracking properly in turns.
14. Turn needle indicating turn in proper direction.
15. Balance ball moving freely; liquid dampening fluid full.
16. Radios and NAVAIDS turned on and set.

NOTE

Most military airfields require "start–up" clearance from Ground Control prior to engine start. Check with Base Operations to determine if this is required.

The Instrument Checklist may be commenced at any time after strapping in; however, it cannot be completed until the aircraft has begun taxiing. Your instructor will taxi out of the chocks and turn the aircraft slowly so that you may ensure proper RMI, attitude gyro, and turn needle/ball operation.

6-2 RADIO INSTRUMENT FLIGHT PROCEDURES

At some point prior to your completion of the Instrument Checklist, your instructor will direct you to take avionics command. This will be necessary for you to complete the final items on the checklist. When you take avionics command, first ensure the UHF is set to the same channel your instructor had previously selected, then check the transponder is in STBY with the correct code set.

The NAVAID test will be the same as that in Contact Stage with one addition. Since you will be using the IND–350 on your RI flights, it is necessary to check this instrument. Accomplish this as follows: while depressing the SYS TEST button, twist the OBS to the same course indicated by the head of the VOR needle. Select VOR on the VOR/TACAN switch. The CDI should center and the TO–FROM indicator should indicate TO. Repeat the procedure for the TACAN. While conducting the system test the DME should indicate 0.0 or 0.1. Bring any difficulty in completing the checklist to your instructor's attention at once.

NOTE

The above NAVAID test is accomplished using internal self–test circuitry. In addition, test your NAVAIDS prior to flight using ground checkpoints or VOR Test facilities (VOT) if available.

1. **Ground checkpoints:** Airfields normally provide specific ground points to check VOR/TACAN accuracy. Azimuth must be within ±4º of the designated radial and DME within ½ mile or 3% of the distance to the station, whichever is greater.

2. **Certified airborne checkpoints** have been established on airways and near VOR stations to check the accuracy of VOR azimuth in flight. VOR airborne checkpoints are published in FLIP Area Planning (AP1) under country listing.

"CRESTVIEW, FL (Bob Sikes) – 106, 8.6 NM; over rot bcn; 1200 feet."

For the example above, flying directly over the rotating beacon at Bob Sikes airport with Crestview VORTAC tuned, the VOR needle and IND–350 should indicate a radial of 106 with 8.6 in the DME.

NOTE

With an error in excess of "4° during a ground check or 6° during an airborne check", IFR flight should not be attempted.

3. **VOR test facility (VOT):** Some airfields are equipped with a VOT. The VOT transmits a test signal identified by a continuous series of dots or a continuous 1020 hertz tone. With the proper VOT frequency tuned, the VOR needlepoints to 180º. Selecting a course of 180 in the IND–350 should center the CDI with a "TO" indication. Some VOTs are available to the user while airborne, others are limited to ground use only. VOT frequencies are listed in the IFR Enroute Supplement opposite "Radio Aids to Navigation."

In order to simulate real–life IFR procedures, the following clearance and taxi procedures should be used:

4. Prior to taxi, the student will:

   a. Ensure UHF radio mode is in the "both" position and appropriate frequency is selected.

   b. Place his/her clearance on request with Ground Control or Clearance Delivery as appropriate.

   c. Obtain taxi clearance.

   d. Complete items 1 through 11 on the Instrument Checklist.

NOTE

During the Instrument Stage, when appropriate, the instructor may play the role of Clearance Delivery, Ground, Tower, Departure, Center, Approach, etc. The instructor may give the student the clearance any time after it has been placed on request.

5. While taxiing to the runup area, the student will complete the Instrument Checklist. If the altimeter error is in excess of 75 feet, report the error to your instructor. The aircraft is not legal to fly in an IFR environment with an error greater than 75 feet.

602. CLEARANCES

IFR clearances will include the following items as appropriate:

1. Aircraft identification

2. Clearance limit

3. Departure procedure

4. Route of flight

5. Altitude data

6. Holding instructions

7. Any special information

8. Radio frequency and transponder information

NOTE

There is no requirement for pilots to read back ATC clearances received on the ground unless the clearance differs from the filed flight plan. However, pilots should clarify any portion of the clearance not completely understood. In addition, controllers may require pilots to read back any clearance. During the Instrument Flight Stage, student pilots will be required to read back all ATC clearances.

603. DEPARTURES

Reference: AIM, Chapter 5.

Amplification – An instrument departure is a procedure used to ensure a safe climbout from an airport and to provide safe separation between aircraft. You will use the following departures throughout your training and subsequent flying career.

1. Instrument Departure Procedure

   a. **Amplification** – An instrument departure procedure (DP) is a preplanned IFR air traffic control departure procedure published for pilot use in either text form or in charted graphic form. DPs ensure safe transition from the terminal to the appropriate enroute structure and provide the following advantages:

      i. Graphic and/or textual portrayal of departure route.

      ii. Guaranteed obstacle clearance.

      iii. Increase efficiency and reduce communications and departure delays.

      iv. Approved ATC departure route clearance in the event of radio failure.

      v. Can be designed to support noise abatement programs.

   b. **IFR Takeoff Minimums And (Obstacle) Departure Procedures** – While planning for the flight the pilot should determine if there are any IFR takeoff minimums and (obstacle) departure procedures for the departure airport. If an inverted triangle with the capital letter "T" appears on the departure or approach plate (see Figures 6–2 and 6–3) for the departing airport, a textual departure is located in the section: "IFR TAKEOFF MINIMUMS AND (OBSTACLE) DEPARTURE PROCEDURES" in the front of the applicable DOD Flight Information Publication volume that lists the Airport Diagrams, Instrument Approach Procedures, Departure Procedures and Radar Instrument Approach Minimums (approach plates). The pilot is expected to review these procedures prior to departure (Figure 6–4).

c. **Departure plates** – Planning for the route of flight is an integral part of preflight preparation. Once the appropriate DP has been selected, its name and number (as appropriate) are entered in the route of flight block of the flight plan. Always consult NOTAMs for any changes. Since, in most cases, the pilot can expect ATC to issue the clearance as filed, it is advantageous to utilize a DP because it enables the pilot to anticipate the departure instructions. The departure plate must be studied thoroughly for headings, courses, altitude restrictions, and climb gradients. Figures 6–1, 6–2, 6–3, and 6–4 provide examples of various DPs.

NOTE

If the pilot does not possess a DP or does not wish to use one, he/she is expected to advise ATC. This may be accomplished by stating "NO DP" in the remarks section of the flight plan or by verbally advising ATC.

2. **Radar Departure**

Amplification – Many military and civilian fields have no published DPs. A radar departure is a procedure used in the absence of a DP, or if the pilot elects not to fly the published DP for some reason. The radar departure may use radar vector instructions or allow aircraft to proceed direct to a point along the flight plan route. When departing an airport via a radar departure, the pilot generally files direct to the nearest fix along his intended route of flight. The pilot may only expect a radar vector departure if it is requested in the remarks section of the flight plan, otherwise a DP may be assigned by ATC if a DP is available.

3. **Instrument Departures**

a. Procedures

i. File the flight plan.

ii. Place your clearance on request, copy and read back entire clearance.

iii. Tune and identify the required NAVAIDS for the departure.

Refer to the following examples for setting up NAVAIDS:

Figure 6–1 – TACAN on NGP Ch. 87X – VOR on CRP frequency 115.5.

Figure 6–2 – TACAN on NPA Ch. 119X – VOR not required.

Figure 6–3 – TACAN on ORD Ch. 86X – VOR on first enroute NAVAID.

NOTES

1. If both NAVAIDS are not required for the departure, it is a good practice to keep one set for an approach back into the departure airfield in the event this becomes necessary. Leaving the TACAN set to the departure airfield NAVAID is not required, but provides the pilot with the advantage of immediate DME reference to the airfield.

2. VOR and TACAN stations are subject to line–of–sight limitations, so you may be unable to receive them before takeoff. Therefore, leave the NAVAID audio switch forward until you have received a good ident.

iv. Set the appropriate course in the IND–350 and check the VOR/TACAN switch in the appropriate position for the departure.

(a) Refer to the following examples for setting up NAVAIDS:

Figure 6–1 – "TACAN" selected either 203º or 213º selected in CDI.

Figure 6–2 – "TACAN" selected, 295º selected in CDI.

Figure 6–3 – "TACAN or VOR" selected as required.

(b) Review all departure procedures (including the example in Figure 6–4), paying particular attention to headings, courses, altitudes, and climb gradients to be flown. Ensure NAVAIDS are tuned and set as required.

v. Set assigned squawk in the transponder.

vi. Contact Tower for takeoff and comply with any special instructions provided by Tower.

vii. When directed, switch to departure control and make the "Off Report."

viii. Comply with radar vector departure or DP instructions as appropriate. The departure phase is considered complete after joining the air route structure at the completion of the DP or when ATC instructs you to "Resume own navigation."

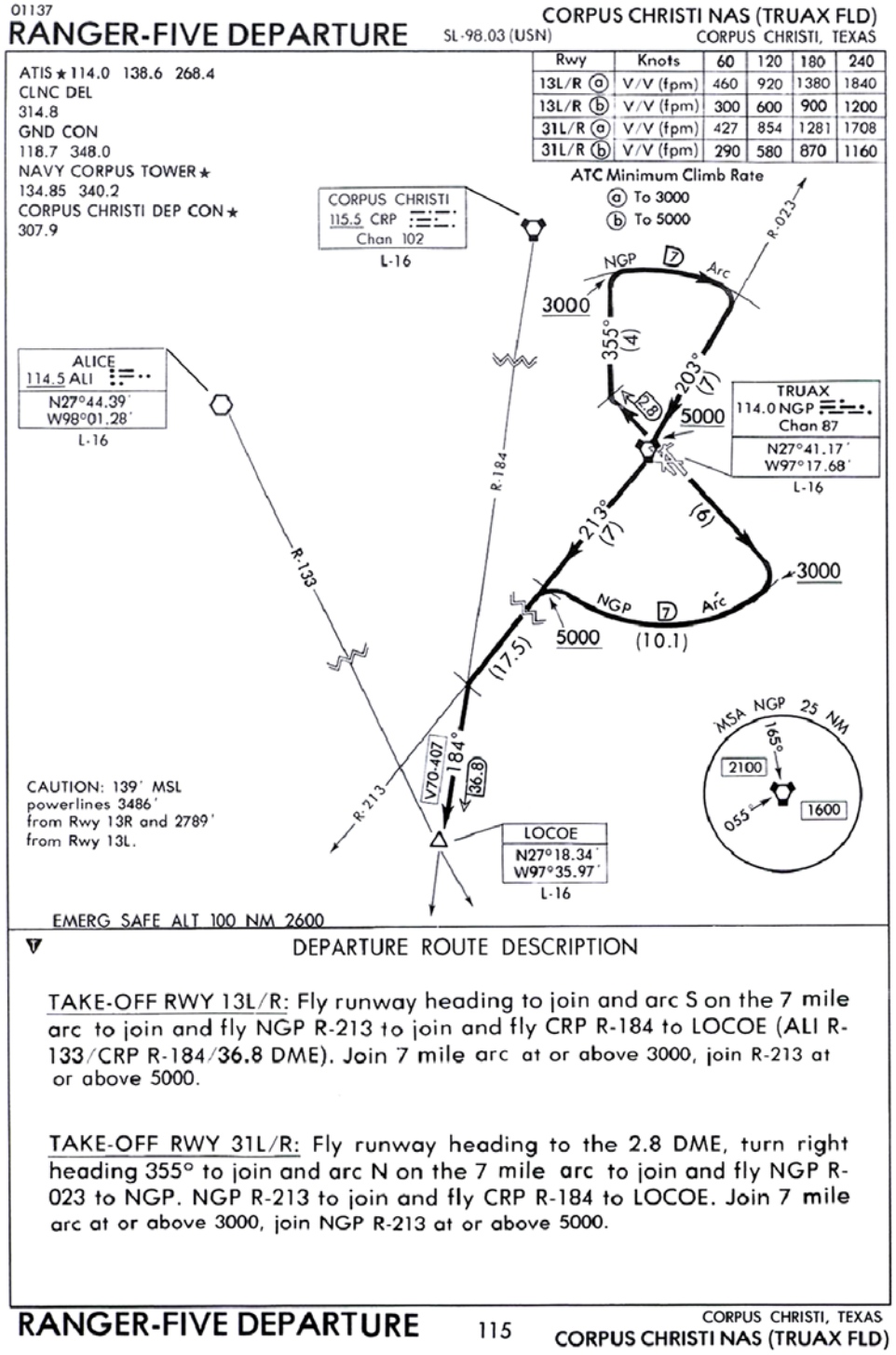

Figure 6–1 Ranger-Five Departure

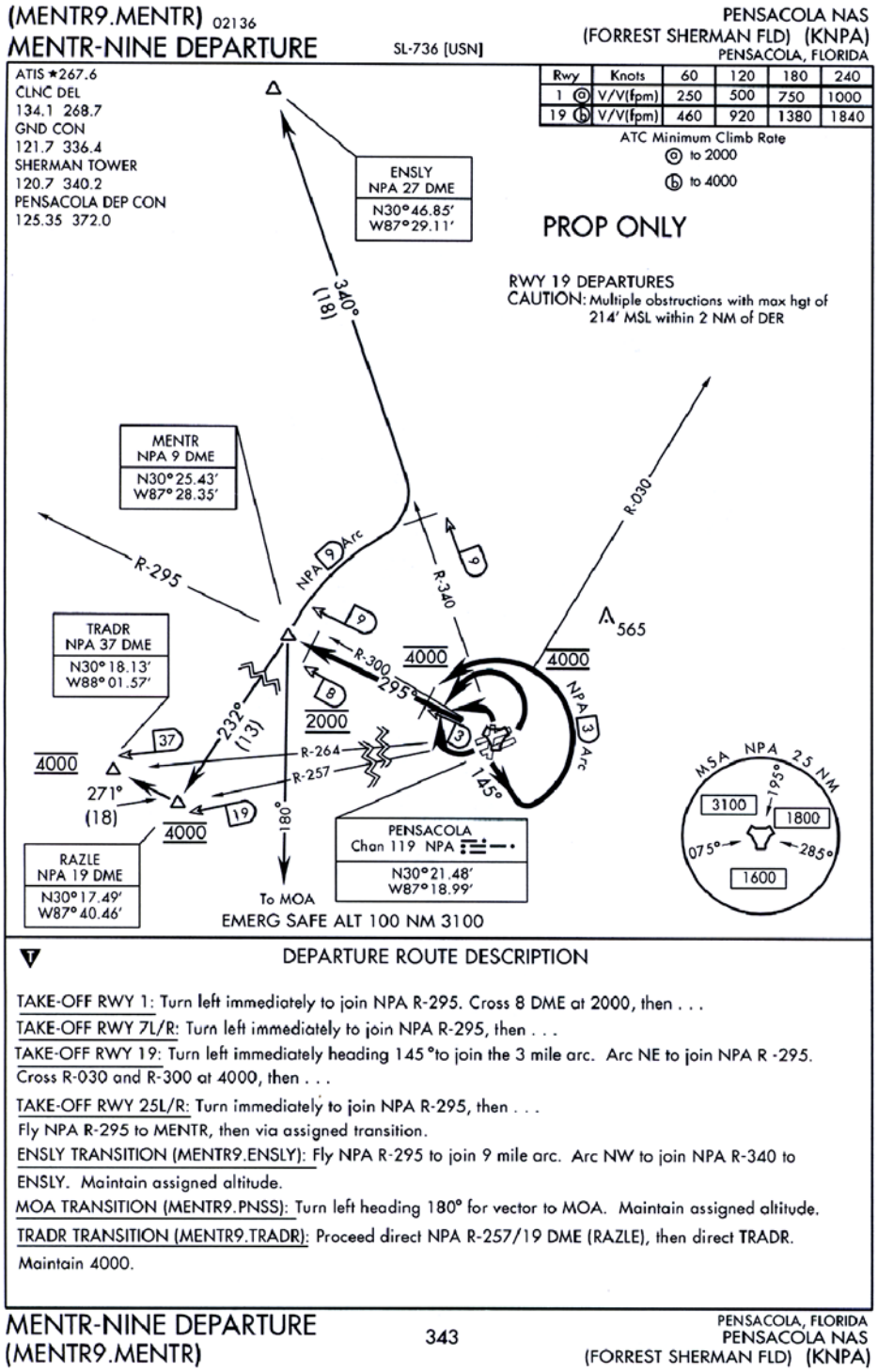

Figure 6–2 MENTR-NINE Departure (KNPA)

Figure 6–3 O'Hare One Departure

XX

IFR TAKE-OFF MINIMUMS AND (OBSTACLE) DEPARTURE PROCEDURES

Military Airports and Selected Civilian Airports

ALL USERS: Airports that have Departure Procedures (DPs) designed specifically to assist pilots in avoiding obstacles during the climb to the minimum enroute altitude, and/or airports that have IFR take-off minimums other than standard, are listed below. Take-off Minimums and Departure Procedures apply to all runways unless otherwise specified. Altitudes, unless otherwise indicated, are minimum altitudes in feet MSL.

DPs specifically designed for obstacle avoidance are described below in text, or published separately as a graphic procedure. If the (Obstacle) DP is published as a graphic procedure, its name will be listed below, and it can be found in either this volume (military), or the Civil Departure Procedures volume (civil), as appropriate. Users will recognize (Obstacle) graphic DPs referenced below by the following note printed on the charted procedure: "If not assigned a Departure Procedure by ATC, this procedure may be flown to provide obstacle clearance". The term "(OBSTACLE)" will also be printed on the charted procedure.

(Note: Graphic Departure Procedures that have been designed primarily to assist Air Traffic Control in providing air traffic separation (as well as providing obstacle clearance) are usually assigned by name in an ATC clearance and are not listed by name in this section.)

MILITARY USERS: IFR departure procedures not published as graphic Departure Procedures and take-off minima are included below and are established to assist pilots in obstacle avoidance. Refer to appropriate service directives for take-off minimums.

CIVIL USERS: FAR 91 prescribes standard take-off rules and establishes take-off minimums for certain operators as follows: (1) Aircraft having two engines or less-one statute mile. (2) Aircraft having more than two engines-one-half statute mile. These standard minima apply in the absence of any different minima listed below.

AIRPORT NAME	TAKE-OFF MINIMUMS

AMERICUS, GA
SOUTHER FIELD (ACJ)
All rwys, climb rwy hdg to 800 before turning.

ATHENS/BEN EPPS (KAHN), GA . Rwy 20, 200–1
Rwy 2, 9 and 27, climb rwy hdg to 1100 before turning.

ATLANTA, GA
DELKAB-PEACHTREE (KPDK)
. Rwy 20L, 20R, 1100-2*
Rwy 34, 900-2**

* Or standard with minimum climb of 300/NM to 2300.
** Or standard with minimum climb of 280/NM to 2100.
Rwy 2L, 2R, 9, 16, 27 climb rwy hdg to 2300 before proceeding on course. Rwy 20L, 20R start left turn within 1 NM of airport, climb on hdg 150° to 3100 before proceeding on course. Departure procedures not required for aircraft with minimum climb of 310/NM to 3100.
TAKE-OFF OBSTACLES; Rwy 2L, 2R: 100' AGL trees 2100' from departure end of rwy.
Rwy 9: 100' AGL trees 2750' from departure end of rwy. Rwy 27: 80' AGL trees 340' from departure end of rwy, 420' left of centerline.

FULTON COUNTY AIRPORT-BROWN FIELD (KFTY) . . . . . Rwys 8, 9, 14, 400-1*
Rwy 32, 700-3*
Rwys 26, 27, 500-1**

* Or standard with a minimum climb of 290/NM to 1600.
** Or standard with a minimum climb of 260/NM to 1300.
Rwy 8, 9, left turn, climb on 060° on hdg to 3100 before proceeding on course.
Rwy 14, climb rwy hdg to 1400 at minimum climb of 220/NM before proceeding on course. Rwy 26, 27, 32 climb rwy hdg to 1400 before turning. Departure procedure not required for aircraft with minimum climb of 300/NM to 3100 or when weather is 1300-2 or better.

AUGUSTA, GA
DANIEL FIELD (DNL) . . . . . Rwy 23, 700-2*

* Or standard with minimum climb of 290/NM to 1200.

AUGUSTA REGIONAL AT BUSH FLD (KAGS)
Rwy 8, climb via heading 100 to 2300 before turning northbound. Rwy 17, 26 and 35, climb rwy heading to 2300 before turning northeast bound.
TAKE-OFF OBSTACLES: Rwy 8: 70' AGL trees 560' from departure end of rwy, 525' left of centerline. Rwy 26, 88' AGL trees 2050' from departure end of rwy 340' left of centerline. 90' AGL trees 5100' from departure end of rwy, 1200' left of centerline.

BONIFAY, FL
TRI CO (1J0)
Rwys 1 and 19 climb rwy hdg to 2000 before turning West.

Figure 6–4 IFR Takeoff Minimums and (Obstacle) Departure Procedures

b. **Common Errors**

i.. Failure to set up NAVAIDS and transponder prior to takeoff.

ii. Failure to set up NAVAIDS properly.

(a) Failure to twist correct departure course in IND–350.

(b) Failure to check VOR/TACAN switch in the proper position.

(c) Failure to select T/R position on TACAN.

iii. Failure to identify each NAVAID.

604. USE OF THE IND–350

1. **General** – Almost without exception, military aircraft make use of a radio compass system as the primary navigation instrument. In the T–34C, this system's cockpit display is the radio magnetic indicator (RMI). In its role as a compass, you have used this instrument since the Contact Stage. In the Instrument Stage, you will combine this usage with the interpretation of aircraft position as depicted on the RMI's VOR and TACAN needles.

The RMI's principal shortcoming is its small size. Just as it is difficult to resolve small heading differences on the face of this instrument, it is also difficult to recognize small deviations from your desired course as depicted on the VOR and TACAN needles, hence the IND–350.

The course deviation indicator (CDI) is the major component of the IND–350; its other components are the Omni Bearing Selector (OBS) and TO/FROM indicator.

It is important to reemphasize here that, in the event of a discrepancy between RMI and CDI, rely upon the RMI for course information.

To properly use the IND–350, you must first twist the desired course with the OBS. Then, set the VOR/TACAN switch to the appropriate position. The TO/FROM indicator will then show whether the course selected will take you TO or FROM the NAVAID tuned. If you are within 10º of the course selected, the course deviation indicator will provide a picture of relative position.

With a VOR frequency or TACAN channel selected, each "mark" on the CDI represents 2º of deviation (full scale deflection of 10º). With a localizer frequency selected and the VOR/TACAN switch toggled to "VOR," each mark on the CDI represents ½° of deviation (full scale deflection of 2½°).

Figure 6–5 presents a typical situation. The selected course inbound to the station is 360º and the aircraft is 5º left of course (imagine your aircraft on the tail of the VOR needle and at the center of the CDI). You must, therefore, turn right (into the CDI) to establish the aircraft on the desired

course. Note that the CDI provides an easily interpreted picture of course deviation and correction, but actual aircraft position (185º radial) is more easily seen on the RMI.

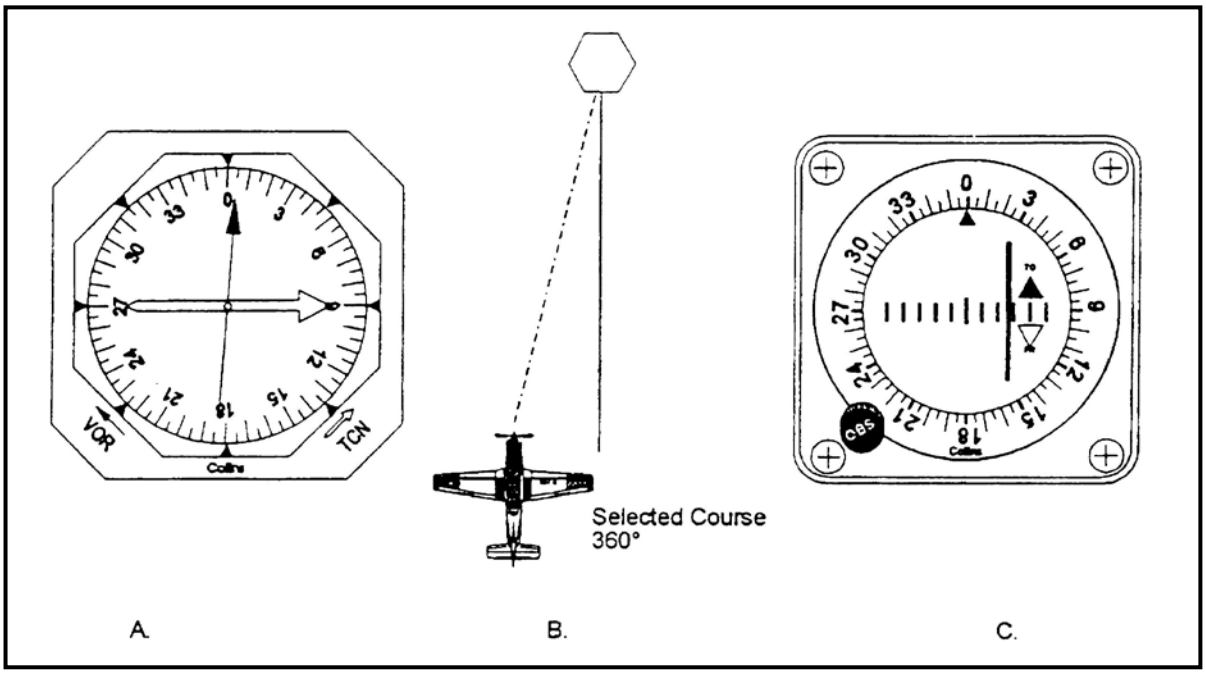

Figure 6–5 Aircraft on 185º Radial

Thus, as a rule, you will use the RMI for orientation, and the CDI as an initial indication of approaching the assigned course (specifically within 10º of course) and fine tuning once established on course. Keep this dictum in mind throughout the Radio Instrument Stage and you should have few problems with disorientation.

2. **Reverse Sensing** – We have just covered the normal use of the IND–350. Now we will discuss a possible misuse of the CDI portion of this instrument.

The CDI will be centered whenever the aircraft is on the radial selected by the OBS, or on the reciprocal of that radial. Keeping the above in mind, examine Figure 6–6A and B, noting the absence of a TO/FROM indication. Can you determine the position of the aircraft?

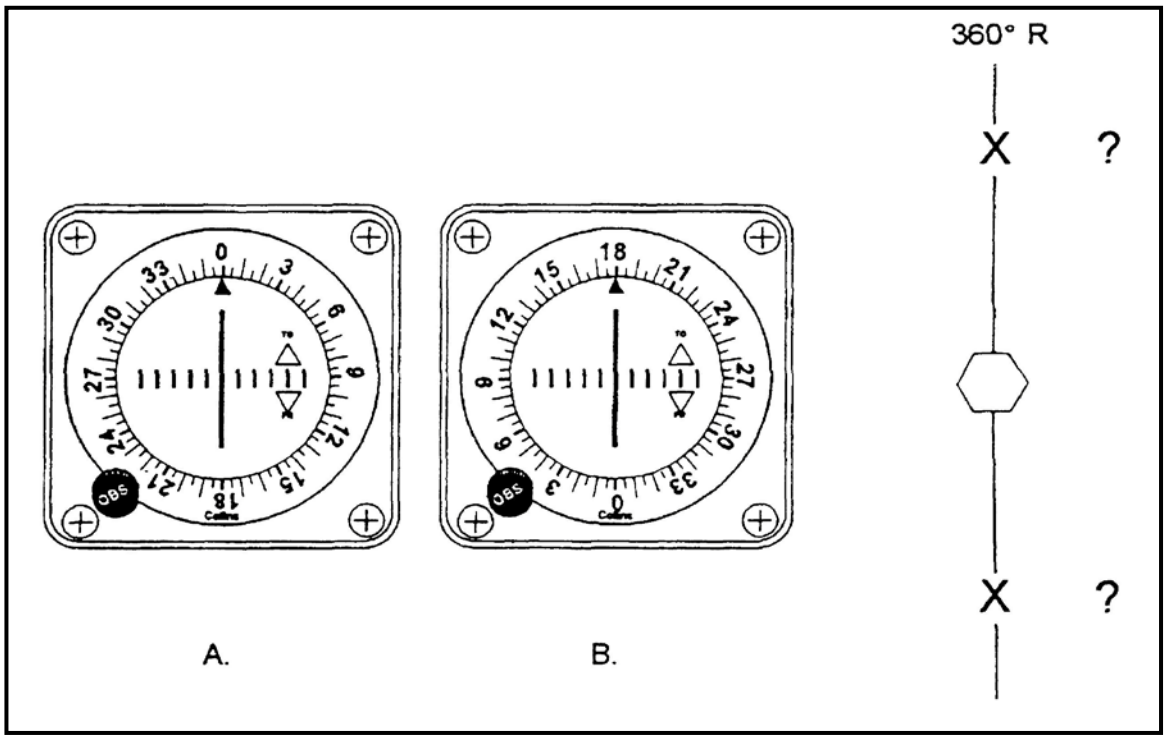

Figure 6–6 Aircraft on 185º Radial

The answer, of course, is no! In Figures 6–6A and 6–6B, the aircraft could be either north or south of the station. Until we know whether the course selected will take us TO or FROM that station, we cannot orient ourselves. Consider the same situation with an operational TO/FROM indicator.

In Figure 6–7A, the TO indicator is visible. This means if you fly 180º (course selected by OBS), you will go to the NAVAID. This could only be possible if you were north of the station as in Figure 6–7C. Figure 6–7B shows the FROM indicator with a course of 360º set, meaning if you fly 360º, you will go FROM the station. Again, only the situation illustrated in Figure 6–7C satisfies these conditions.

Now we know that in both of the above depictions, the aircraft is located on the 360º radial, i.e., due north of the station. This is so because a course of 360º will take us FROM the station and a course of 180º will take us TO the station.

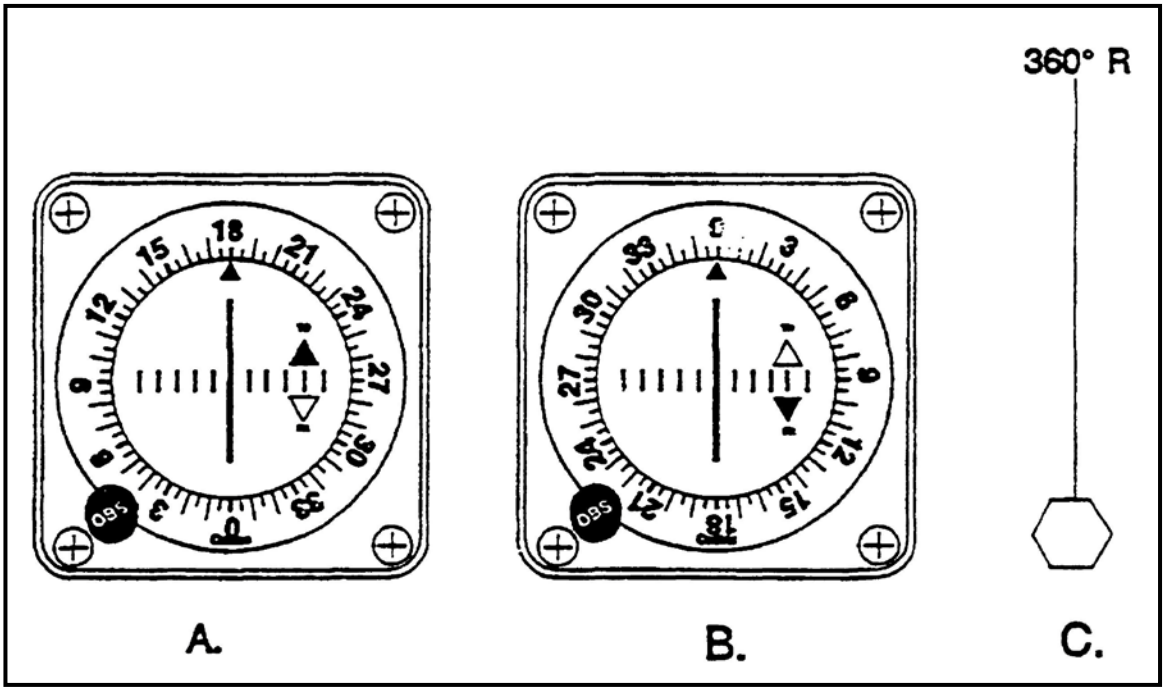

Figure 6–7 IND–350 with TO–FROM Indicators

A problem remains, however. We have not yet discussed the aircraft's heading, which is completely independent of its momentary position. Let us continue with the above example. Figure 6–8 shows one possible combination of aircraft heading and position.

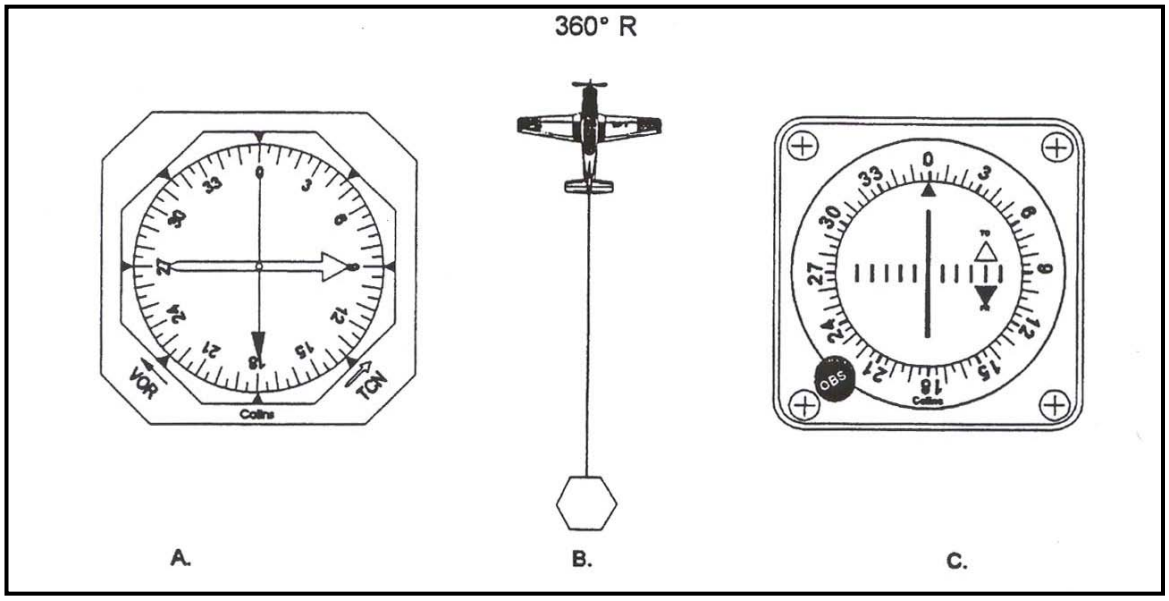

Figure 6–8 Aircraft on 360º Radial

Now, suppose that we drift off our desired course to the east. (A wind from the west or poor heading control could do this.) Our indications will be as in Figure 6–9.

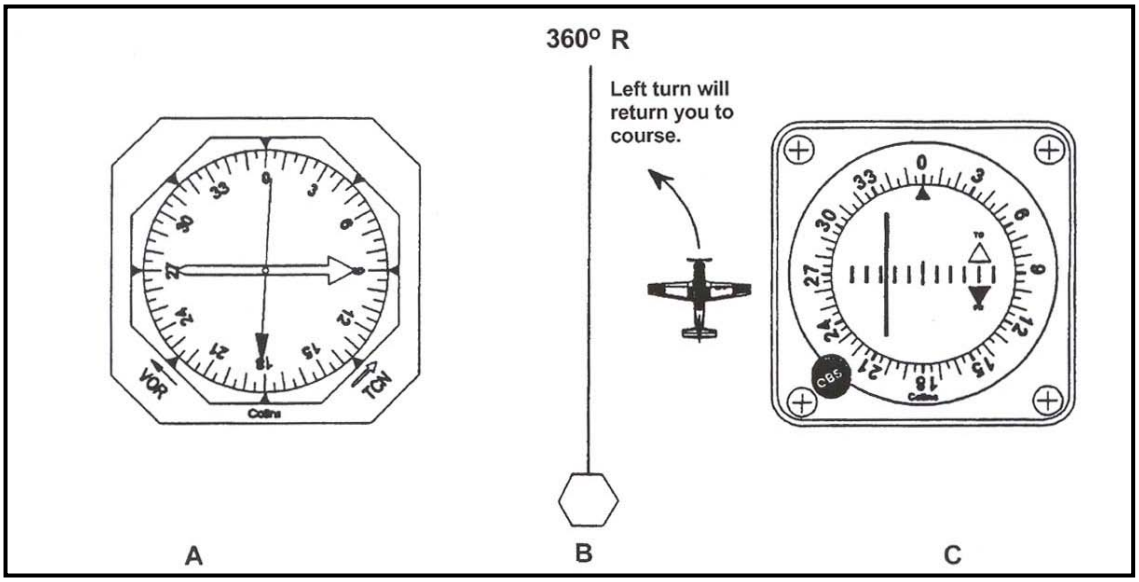

Figure 6–9 Aircraft East of Course

In Figure 6–9C, the CDI is to the left of center, indicating a left turn to get back on course. In Figure 6–9A, a left turn will place the tail of the needle in a position to rise to the course of 360º.

In Figure 6–10, the aircraft is north of the station with 360 in the OBS. However, in this case, a heading of 180 is being flown.

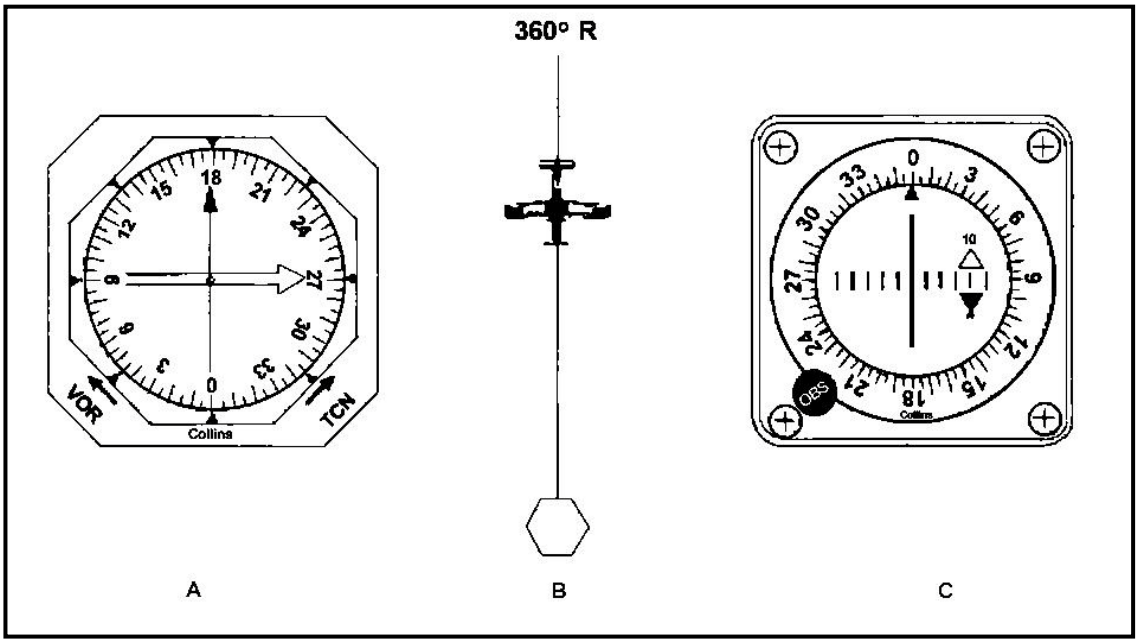

Figure 6–10 Aircraft North of Station Heading 180º

Again, consider the aircraft drifting off course to the east (Figure 6–11).

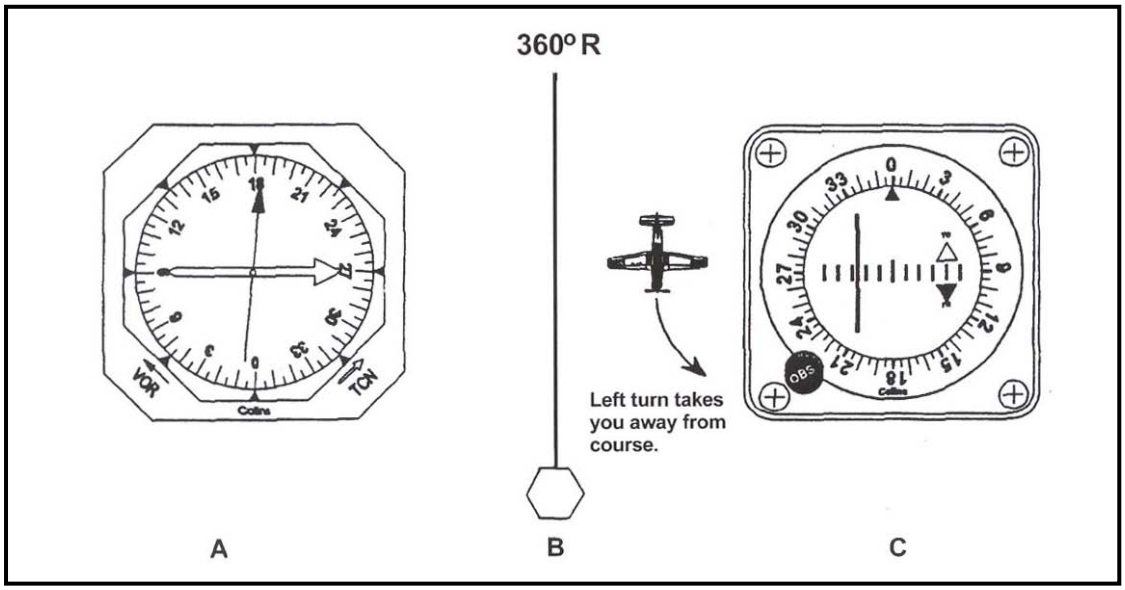

Figure 6–11 Aircraft Drifting to the East

In Figure 6–11C, the CDI is displaced to the left of center. This would suggest a left turn to return to the desired course. However, examination of Figures 6–11A and 6–11B indicates a right turn is necessary.

We can see that we appear to be getting conflicting information. The RMI shows a right turn necessary to return to course, the CDI indicates a left turn.

This is a condition of the IND–350 known as "reverse sensing." Reverse sensing will occur any time you twist a course with the OBS which lies in the lower half of the RMI, the case illustrated in Figure 6–11. In some cases, this may be done deliberately with the intention of immediately turning to a heading on which the IND–350 will provide proper sensing. In most cases, however, reverse sensing will be the result of setting an improper course (probably 180º off) with the OBS and attempting to remain on course by reference to the CDI only.

To avoid reverse sensing make it a habit to orient you on the RMI and use the IND–350 in its proper secondary role. Do not use the IND–350 to determine the direction of turn.

605. TRACKING

1. **Amplification** – Tracking is a procedure used to determine the proper heading to correct for drift in order to maintain a desired track over the ground. If a crosswind exists, the aircraft must crab into the wind to maintain a straight path over the ground, thus preventing drift.

NOTE

In the following section we will consider a situation in which the aircraft is flying a course of 83º to the NAVAID with a wind from the NORTH. The basic procedure remains unchanged for different course and wind combinations; only the numbers change.

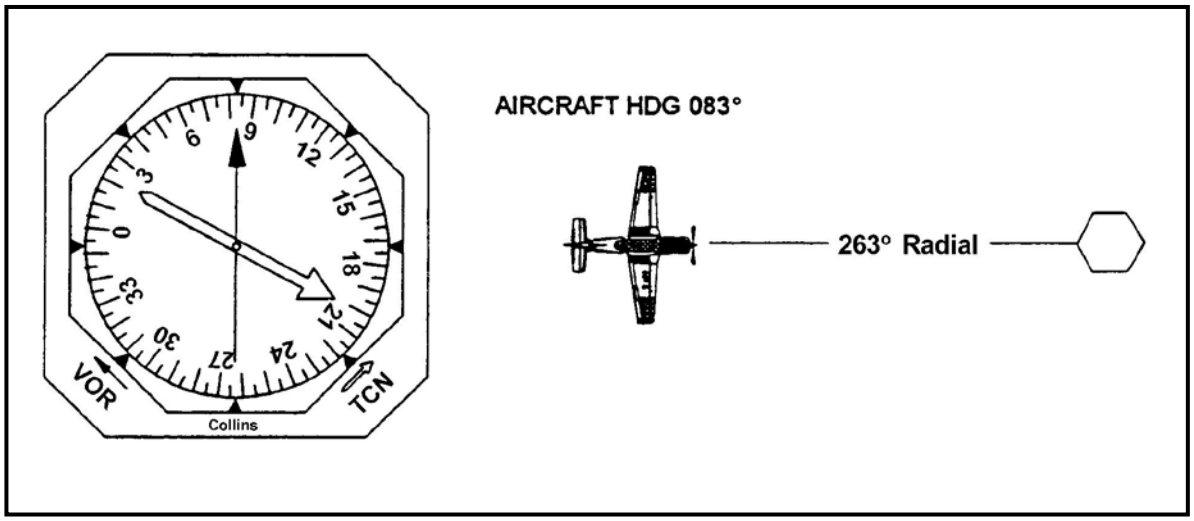

Figure 6–12 Aircraft on 263º Radial

2. **Procedure (VOR or TACAN)**

a. Set the proper course in the IND–350.

b. Check the VOR/TACAN switch in the proper position.

c. Establish the aircraft on the proper radial, flying either inbound or outbound. Visualize the aircraft as being on the tail of the RMI needle, with the NAVAID at the center (Figure 6–12).

d. Turn to and fly a heading equal to the course selected (83º in this case). Precise heading control is very important.

e. Ensure the desired course is in the upper half of the RMI.

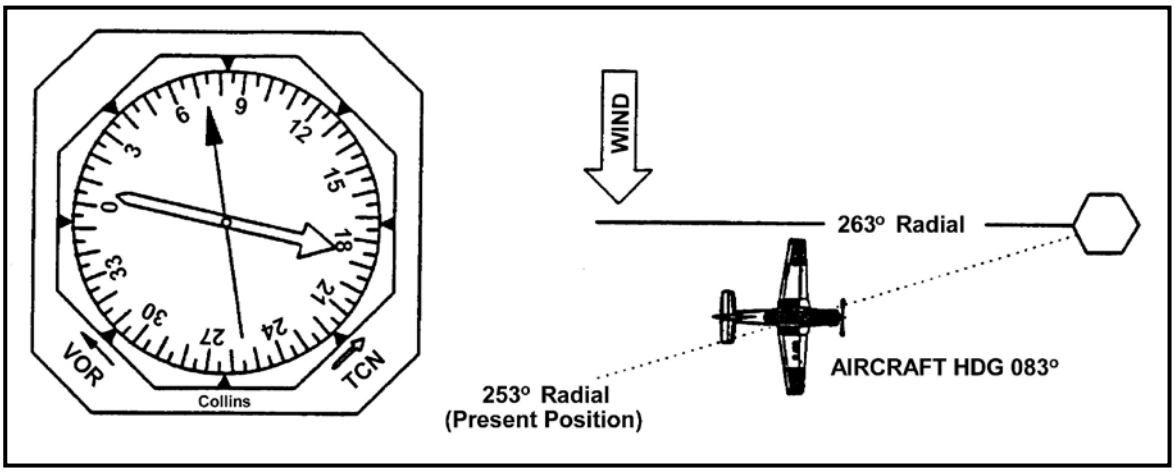

Figure 6–13 Aircraft on 253º Radial

f. Check for drift by use of the CDI and RMI.

The existence of a crosswind component will be indicated by CDI and RMI needle displacement. In Figure 6–13, the aircraft is no longer inbound on the 263º radial. A crosswind from the NORTH has blown the aircraft to a position SOUTH of the 263º radial to the 253º radial.

g. Determine the wind direction with the RMI.

Imagine the aircraft on the tail of the needle in use. Visualize a line from the tail of the needle (present position) through the desired radial. Imagine sliding this line to the center of the RMI as in Figure 6–13. This will indicate the direction the wind is FROM (to the nearest cardinal heading).

TAIL – RADIAL – WIND (Direction FROM)!

h. Turn toward the desired radial.

i. This will be a turn into the wind. The number of degrees to alter heading will depend on the rate of drift, number of degrees off course, and distance from the NAVAID.

NOTE

A turn of 10 to 30 degrees toward the desired radial will normally suffice.

ii. Figure 6–14 shows the aircraft in the process of re–intercepting the 263º radial. Note that we have altered the course to the left (toward the desired radial) by about 20º. This places the head of the needle in a position to fall and the tail in a position to rise to the desired 263º radial.

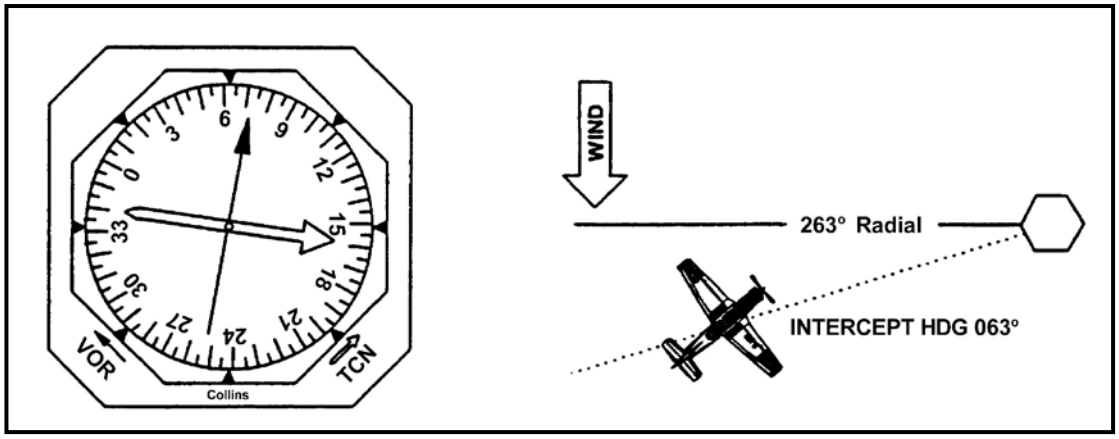

Figure 6–14 Aircraft on Intercept Heading

i. Hold the intercept heading until the aircraft approaches the desired course.

j. As the CDI centers, turn back toward the desired course. You must maintain a drift correction so as not to be blown back off course (Figure 6–15). Try 5º initially and adjust as necessary to remain on course.

k. Continue to track and fine tune the drift corrected heading to stay on course.

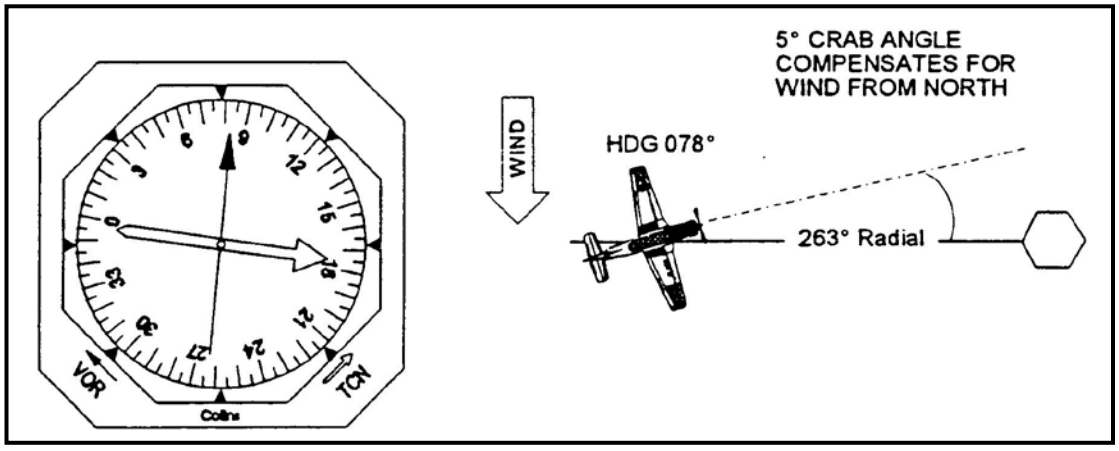

Figure 6–15 Aircraft on Intercept Heading

NOTE

Your instrument indications may fluctuate when close to the NAVAID; this does not necessarily mean your aircraft is off course. Do not chase either the VOR or TACAN needle when close to the station. Limit your heading corrections to within 10º of drift corrected heading when in close to avoid overshooting.

IMPORTANT!

Good heading control is probably the single most important consideration for good tracking. If you do not maintain good heading control, you will not know if the aircraft is off course due to wind drift or due to poor basic airwork. As a result, it will be more difficult to determine the exact aircraft heading required to correct for drift.

Remember that radials converge; therefore, needle movement will occur more rapidly close to the NAVAID. Limit heading changes to within 10º of drift corrected heading when close to the NAVAID to avoid overshooting the desired course.

3. **Common Errors**

a. Failure to establish the aircraft on the proper radial initially.

b. Poor heading control.

c. Failure to leave in a drift correction.

d. Excessive heading corrections close to the NAVAID.

e. Confusing the difference between intercepting and tracking a course. Use an intercept to get on the desired course. Tracking cannot be commenced until the aircraft is established on course**.**

f. Failure to utilize the CDI to note early course deviations.

606. STATION PASSAGE

Reference: NIFM Part V, "Station Passage."

Station passage is defined as the moment the aircraft passes directly over or abeam the radio facility.

1. **VOR** – Station passage is noted at the first positive change of the TO/FROM indicator to "FROM." It is important that this method of determining station passage be used each time. To receive a FROM indication after station passage, the IND–350 must have been set to a course that resulted in a "TO" indication prior to station passage.

NOTE

The head of the VOR needle should fall below the 90º benchmark at approximately the same time as the first positive "FROM" indication on the IND–350.

2. **TACAN –** Due to the increased cone of confusion associated with TACAN stations, station passage is noted when DME stops decreasing. When flying directly over the TACAN station, the range indicator will stop decreasing when it indicates the approximate aircraft altitude above the station in nautical miles (NM). For example, an aircraft flying at 30,000 feet over a TACAN station at sea level will indicate station passage at 5 DME (6000 feet per 1 NM).

NOTE

Your instrument indications will fluctuate when close to the station; this does not necessarily mean your aircraft is off course. Do not chase either the VOR or TACAN needle when close to the station. Limit your heading corrections to within 10º of drift corrected heading when in close to avoid overshooting.

607. OVER–THE–STATION INTERCEPT

Reference: NIFM Part V, "Station Passage."

1. **Amplification** – An over–the–station intercept is a procedure used to intercept and fly outbound on a specific radial after station passage. In Radio Instrument Stage, the over–the–station intercept will be practiced as a distinct maneuver. In the "real world" the over–the–station intercept is normally performed as part of an overall maneuver such as an instrument approach or Missed Approach, or while flying the airways.

2. **Procedure** – Upon station passage, perform the following procedures: (6 Ts as appropriate).

a. **TIME –** Note time of station passage; write it down.

b. **TURN –**

i. Turn in the shortest direction toward the outbound course.

ii. Roll out on a heading the same as the outbound course (parallel the new course).

c. **TIME –** As required.

d. **TRANSITION –** As required.

e. **TWIST –** Set the new course in the IND–350.

i. Wait for the VOR or TACAN needle to settle down.

ii. Note the number of degrees between the intended course and the tail of the needle.

iii. Turn away from the tail of the needle the number of degrees that you are off course, up to a maximum of 45º. Maintain this heading while the tail of the needle rises to the outbound course.

iv. As the tail of the needle approaches the outbound course, turn to the outbound course and track outbound.

f. **TALK** – Give voice report if required.

NOTE

The first 4 Ts are completed separately and in sequence. The last two Ts may be conducted after the fourth T, "Transition," has been initiated.

3. **Common Errors**

a. Not giving the instruments enough time to settle down before establishing angle of intercept.

b. Drifting off or changing the intercept heading while the tail of the needle rises to the outbound course. Hold the intercept heading until you can make one continuous turn rolling out on course.

608. RADIAL INTERCEPTS

Reference: NIFM Part V, "Course Interception."

1. **Amplification** – A radial intercept is a procedure used to position the aircraft on a different radial. Radial intercepts are performed to allow you to practice orienting yourself around a navigational facility and are generally encountered in a Teardrop or Procedure Turn approach. You may be outbound or inbound on your present radial and be required to intercept a new radial either inbound or outbound. Regardless of the situation, the same procedures are used for all radial intercepts of 30º or less.

2. **Procedure**

a. Determine the new course and set it in the IND–350. Your new course will be either:

i. The same as the new radial if intercepting outbound.

ii. The reciprocal of the radial if intercepting inbound.

b. Determine the radial you are on by looking at the tail of the appropriate needle.

c. Determine the location of the desired radial relative to the tail of the needle (left or right).

d. Start a turn toward the desired radial.

e. Stop the turn with the new course under the first 45º benchmark in the top half of the RMI. Note and fly the associated heading.

NOTE

To ensure you have the proper intercept established, check that the head of the needle is in a position to fall, or the tail of the needle in a position to rise to the new course. Also, to ensure proper sensing of the CDI, check that the course selected is in the upper half of the RMI.

f. Maintain this intercept heading until the needle approaches the desired course.

g. Judge the rate of intercept and plan your turn to roll out on the new course.

h. Track on the desired course.

3. **Common Errors**

a. Turning toward the new COURSE vice RADIAL.

b. Not doing Steps 1–3 prior to beginning the turn.

c. Flying the benchmark instead of the heading.

609. DOUBLE–THE–ANGLE INTERCEPTS

1. **Amplification** – The double–the–angle intercept is a maneuver that provides a shallow and easily controlled rate of intercept to a desired course. The spacing between radials decreases the closer you get to the station. A large intercept angle, when close to the NAVAID, could easily result in overshooting the desired course. A shallow intercept (double–the–angle) would prevent this.

2. **Procedure**

a. During the last half of your turn toward a desired course, note the number of degrees between the head of the needle and the desired course inbound.

b. Utilizing the one-third rule, plan your rollout so as to stop on a heading double the number of degrees from the desired course to the head of the needle. In other words, place the head of the needle halfway between the aircraft heading and the desired course.

c. The head of the needle is now in a position to fall to the desired course.

Figure 6–16 illustrates a double–the–angle intercept to a course of 270º.

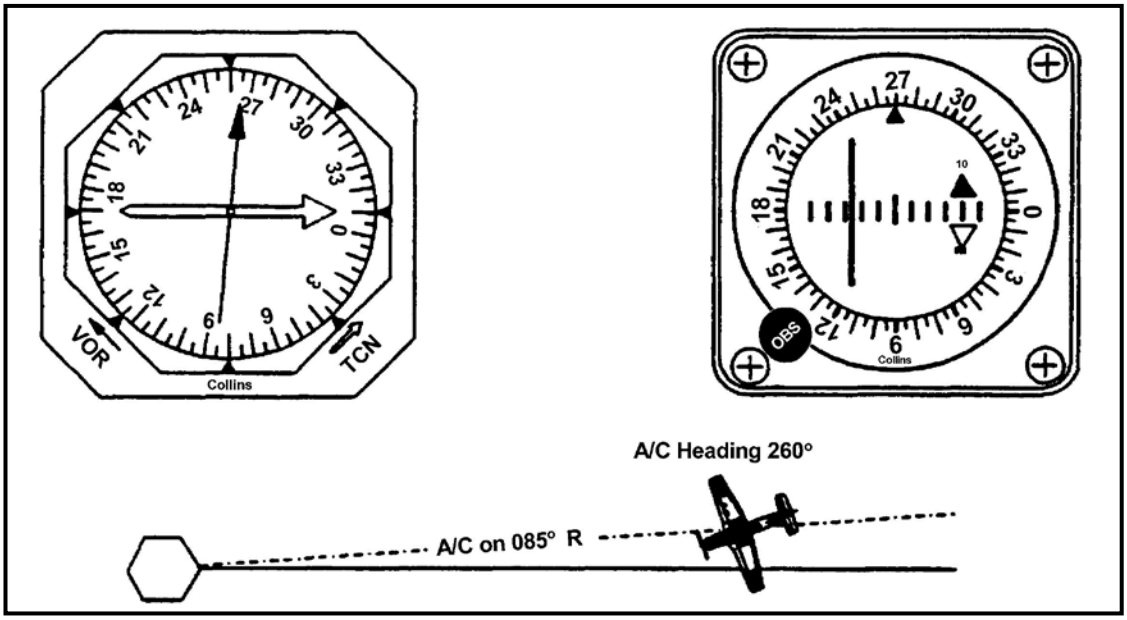

Figure 6–16 Aircraft on 085º Radial

d. Judge the rate of intercept and plan the turn to roll out on course.

e. Track on the desired course.

610. CLIMBS & DESCENTS

Reference: NIFM Part VI, "Enroute Procedures"; AIM, Chapter 4.

Amplification – Sections 611 – 613 will describe the various types of climbs and descents to be used when transiting from the terminal to the enroute structure and back.

NOTE

ATC requires a climb or descent rate consistent with the operating characteristics of the aircraft to 1000 feet above or below the assigned altitude. Once within 1000 feet of assigned altitude, attempt to climb or descend at a rate between 500 FPM to 1500 FPM to the assigned altitude. If unable to climb or descend at a rate of at least 500 FPM, advise ATC.

611. CLIMBS

1. **Amplification** – Occasionally, ATC will find it necessary to assign a higher altitude to comply with IFR separation standards; a pilot may also request a different altitude to take advantage of winds that are more favorable or other in–flight conditions. Climbs of over 1000 feet are accomplished at 120 knots. Climbs of 1000 feet or less are accomplished at cruise speed.

2. **Procedure**

a. Report leaving current altitude for assigned altitude.

b. **<u>If cleared to climb over 1000 feet</u>**: Transition to a 120–knot climb as follows:

i. Add power to 1015 ft–lbs torque and monitor ITT.

ii. Raise the nose to 12–15 degrees nose up. Trim right rudder, nose up as the airspeed decreases.

iii. As the airspeed approaches 120 knots, adjust the nose to approximately 6–8 degrees nose up and retrim.

<u>To level off</u>:

iv. Initiate level off 200 feet prior to assigned altitude.

v. Lower the nose toward the level flight attitude.

vi. Two to three knots prior to the desired cruise airspeed reduce power to the desired cruise power setting. Retrim.

c. **<u>If cleared to climb 1000 feet or less</u>**: Execute the following procedures:

i. Simultaneously add power to maximum allowable while raising the nose slightly to maintain assigned cruise airspeed. Retrim.

<u>To level off</u>:

ii. Initiate level off 50 feet prior to assigned altitude.

iii. Reduce power to the desired cruise power setting while lowering the nose to the level flight attitude. Retrim.

3. **Common Errors**

a. Failure to maintain correct airspeed for the climb.

b. Failure to trim properly.

612. CRUISE POWER DESCENT

1. **Amplification** – A cruise power descent is a procedure used to descend to a lower altitude while enroute to destination. A cruise power descent converts potential energy stored in the aircraft during the climb to altitude, into airspeed on the way down, reducing time to destination.

Descend using cruise power by lowering the nose to establish a comfortable but expeditious rate of descent (1000–4000 FPM). Do not exceed 250 KIAS (195 KIAS in turbulent air).

2. **Procedure**

a. Report leaving current altitude for assigned altitude.

b. Lower the nose and trim as the aircraft accelerates.

c. Adjust the nose attitude for the desired rate of descent (1000 – 4000 FPM).

1000 feet prior to assigned altitude:

d. Adjust the nose attitude for a 500 FPM to 1500 FPM rate of descent and retrim as the aircraft decelerates.

50 feet prior to assigned altitude:

e. Raise the nose toward the level flight attitude.

f. Recheck power at cruise setting.

g. Retrim for straight and level flight as the airspeed bleeds off.

613. TERMINAL DESCENT

1. **Amplification** – A terminal descent is a procedure used to descend to a lower altitude when you are in contact with the destination approach controller and in the terminal phase of your flight. A terminal descent provides a slower rate of descent than the enroute descent. When in the terminal phase of flight, you are more likely to make a relatively short descent and thus a slower rate of descent is appropriate.

2. **Procedure**

a. Report leaving current altitude for assigned altitude.

b. Reduce power to 300 ft–lbs.

c. Lower the nose to maintain cruise airspeed.

d. Trim.

50 feet prior to assigned altitude:

e. Add power to cruise power setting.

f. Set the level flight attitude.

g. Trim.

614. INTERSECTIONS

1. **Amplification** – An intersection is a point defined by any combination of courses, radials, or bearings of two or more NAVAIDS. With DME available, an intersection may be identified as a radial and distance from a station. The station you are using to navigate on the airway is called the primary station. If a station off the airway is used to identify the intersection, it is called the secondary station. Intersections are used to help determine the aircraft's position along the airways.

Identification procedures using either VOR alone, TACAN alone or VOR and TACAN together are covered here.

2. **Procedure (VOR receiver only) (Figure 6–17)**

a. Determine your ETA to the intersection.

i. No later than three to five minutes prior to your ETA, tune and identify the secondary station and check the position of the VOR needle. Do not change the course in the IND–350 yet.

ii. **If the tail of the needle is not within 10º of the intersection radial:**

(a) Retune the primary station and continue to track.

(b) Wait a maximum of one minute.

(c) Retune the secondary station, and once again, check to see if the tail of the needle is within 10º of the intersection radial.

(d) Keep repeating until the tail of the needle is within 10º of the intersection radial.

iii. **If the tail of the needle is within 10º of the intersection radial:**

(a) Set the desired course in the IND–350. If passing straight through the intersection you may set either the radial that makes up the intersection or its reciprocal, which would be the course to the station. However, if you are turning at the intersection, you must set the course you desire to fly after the intersection.

(b) Hold the drift corrected heading carefully. This is your only means of remaining on the airway.

(c) If passing straight through the intersection, wait for the CDI to center and note the time. If turning at the intersection, lead the turn to roll out on the new course and note the time when wings level regardless of the position of the CDI. The distance to the secondary station must be considered when determining the number of degrees to lead the turn to the new course.

(d) If passing straight through the intersection, you must retune the primary station or next primary station after the intersection.

b. Give a voice report if required.

c. If you have already passed the intersection, make the turn to the new course if required, estimate the time you passed the intersection, retune the NAVAIDS as required, and continue to track and give the voice report if required.

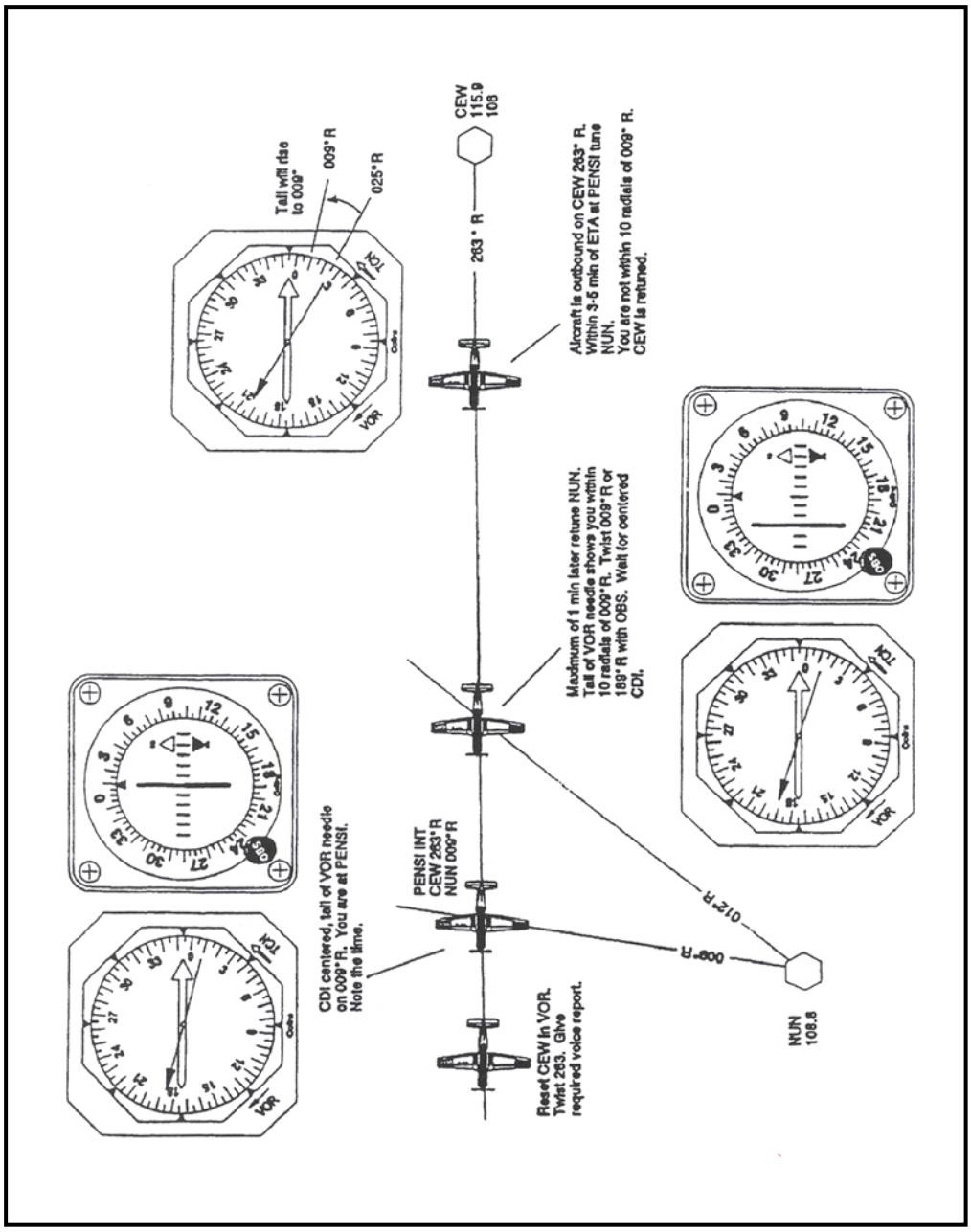

Figure 6-17 Passing Through an Intersection

3. **Procedure – Two navigation receivers (NO DME)**

   a. Determine your ETA to the intersection.

   b. No later than three to five minutes prior to your ETA, tune and identify the secondary station. Check the position of the tail of the needle tuned to the secondary station. This will be referred to as the secondary needle.

NOTE

The secondary needle may be either the VOR or TACAN needle, depending on the type of station (VOR, TACAN, VORTAC) used for the primary station.

c. Continue tracking utilizing the needle tuned to the primary station (primary needle) and the CDI.

d. If passing straight through the intersection, note the time when the tail of the secondary needle reaches the radial that defines the intersection. This indicates your aircraft is at the intersection. If turning at the intersection set the new course in the IND–350 when within 10º of the intersection, place the VOR/TACAN switch to the appropriate position, turn to roll out on the new course, and note the time when wings level.

e. Give voice report as required.

4. **Procedure – TACAN only**

a. PASSING STRAIGHT THROUGH AN INTERSECTION defined by a DME fix, note the time when the DME indicates you are at the intersection, and give voice report as required.

b. TURNING AT AN INTERSECTION defined by a DME fix:

i. Note the aircraft's distance from the intersection on the DME indicator.

ii. Five miles prior to the fix, tune and identify the secondary station.

iii. Maintain heading carefully.

iv. Set new course in the IND–350.

v. As the CDI centers, turn so as to roll wings level with the CDI centered.

vi. Note the time when wings level regardless of the position of the CDI.

vii. Give voice report as required.

NOTE

There are several combinations of the previously described means of identifying intersections, which can be employed, depending on NAVAID types, route structure, and navigation receiver status.

5. **Common Errors**

a. Failure to determine ETA prior to the intersection.

b. Twisting a course in the IND–350 when greater than 10º from the intersection radial.

c. Not recognizing the aircraft is already past the intersection. (Remember, the tail of the needle rises.)

d. Failure to fly the drift corrected heading to stay on course while switching to the secondary station.

e. Twisting in the radial instead of the course when turning at an intersection. This will create a reverse sensing situation after the turn.

f. Failure to select the proper position on the VOR/TACAN switch.

615. HOLDING

Reference: NIFM Part V; FLIP GP Chapter 5; AIM Chapter 5 "Holding."

1. **Amplification** – Holding is a predetermined maneuver which keeps aircraft within a specified airspace while awaiting further clearance from Air Traffic Control. It may be accomplished at an intersection or at a NAVAID. When cleared to hold by ATC, a specified airspace oriented about the holding fix has been reserved, which is clear of other air traffic. The extent of the cleared airspace is defined by the maximum holding airspeed as listed in the FLIP GP and Aeronautical Information Manual. You are expected to cross the holding fix at or below maximum holding airspeed by initiating a speed reduction when three minutes or less from the holding fix. Maximum airspeed for all aircraft is as follows:

0–6000 feet MSL	200 KIAS
6001–14,000 feet MSL	230 KIAS
Above 14,000 feet MSL	265 KIAS
USAF airfields	310 KIAS (unless otherwise depicted)
USN airfields	230 KIAS (unless otherwise depicted)

NOTE

Some holding patterns are restricted to 210 KIAS or 175 KIAS. These Holding Patterns are depicted with an icon indicating the maximum holding speed.

2. **Clearance** – ATC should issue holding clearance at least five minutes before the aircraft reaches the clearance limit. The elements of the holding clearance are as follows:

a. The direction to hold from the holding fix. This is the general compass location in terms of the eight cardinal compass points (i.e., N, NE, E, SE, etc.).

b. The name of the holding fix (may be omitted if included at the beginning of the transmission as the clearance limit).

c. The radial, course, bearing, airway, or route on which the aircraft is to hold.

d. Leg length in miles if DME is to be used.

e. Direction of turn if left turns are to be made (referred to as non–standard holding).

f. Time to expect further clearance and any pertinent additional delay information (times are given in ZULU/GMT).

NOTES

1. If the holding pattern is charted and the controller does not issue complete holding instructions, the pilot is expected to hold as depicted on the appropriate chart. When the pattern is charted, the controller may omit all holding instructions except the charted holding direction and the statement "AS PUBLISHED" (e.g., "HOLD EAST AS PUBLISHED"). Controllers shall always issue complete holding instructions when pilots request them.

2. Request expect further clearance time if not automatically provided by ATC. This time will be used to depart the holding pattern (to proceed enroute or to commence the approach if holding at destination) in the event of communications failure.

3. **Orbits** – The holding pattern requires three types of orbits, which are accomplished sequentially:

a. Entry orbit – expeditiously establishes the aircraft inbound on the holding course.

b. No–wind orbit – determines the initial corrections to make for existing winds.

c. Correction orbits – update and refine the wind corrections.

4. **Timing** – Timing is generally associated with VOR holding. Some TACAN holding patterns may require timing if there is no DME specified. Timing inbound is measured *from* the point that the aircraft is wings level, inbound to the holding fix, *to* the time the aircraft crosses the holding fix.

a. Inbound Leg.

i. At or below 14,000 feet MSL: 1 minute.

ii. Above 14,000 feet MSL: 11/2 minutes.

b. Outbound leg

The outbound leg time will be adjusted to achieve the correct inbound timing. Timing begins *over or abeam* the fix, whichever occurs later. If the abeam position cannot be determined, start timing when turn to outbound is completed. (Wings level or abeam the station, whichever occurs later, see paragraph 615.5.e.iv below)

NOTE

Per AIM 5-3-7.4: The initial outbound leg should be flown for 1 minute or 1 1/2 minutes (appropriate to altitude). Timing for subsequent outbound legs should be adjusted, as necessary, to achieve proper inbound leg time. Pilots may use any navigational means available; i.e., DME, RNAV, etc., to insure the appropriate inbound leg times.

5. **Procedure**

NOTE

Do not hold for an approach you cannot legally execute. If current weather at destination is less than published weather minimums for any suitable approach, request clearance to your alternate airport.

a. Copy and read back holding clearance.

b. Determine the holding course and reciprocal of the holding course.

i. The holding course is the inbound course to the holding fix (Figure 6–18).

ii. The reciprocal of the holding course is used to determine the direction of entry turn. When the holding fix is a NAVAID the reciprocal will be the same as the radial (Figure 6–18).

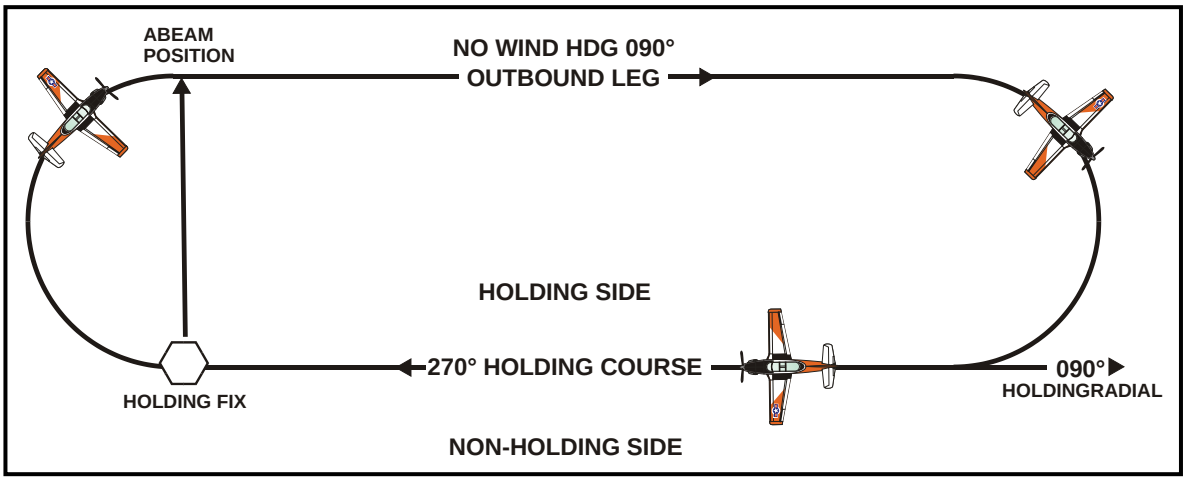

Figure 6–18 Holding Pattern

c. Determine the direction of the entry turn.

i. The position of the reciprocal of the holding course in relation to the RMI heading index at initial holding fix passage will determine the direction of entry turn. There will be certain cases in which the reciprocal will fall on, or very close to, a sector boundary. If the reciprocal is within 5º of a boundary, the entry procedures for either section are acceptable.

ii. **Standard Holding** (Figure 6–19)

(a) Sector A (TEARDROP) – If the reciprocal is between the heading index and 70º to the right of the heading index, make a Teardrop entry. This is accomplished by turning in the shortest direction (left or right) to a heading that is 30º less than the reciprocal.

(b) Sector B (PARALLEL) – If the reciprocal is between the heading index and 110º to the left of the heading index, make a left turn to parallel the reciprocal.

(c) Sector C (DIRECT ENTRY) – If the reciprocal does not meet the criteria listed in(a) or (b) above, turn right to the reciprocal of the holding course.

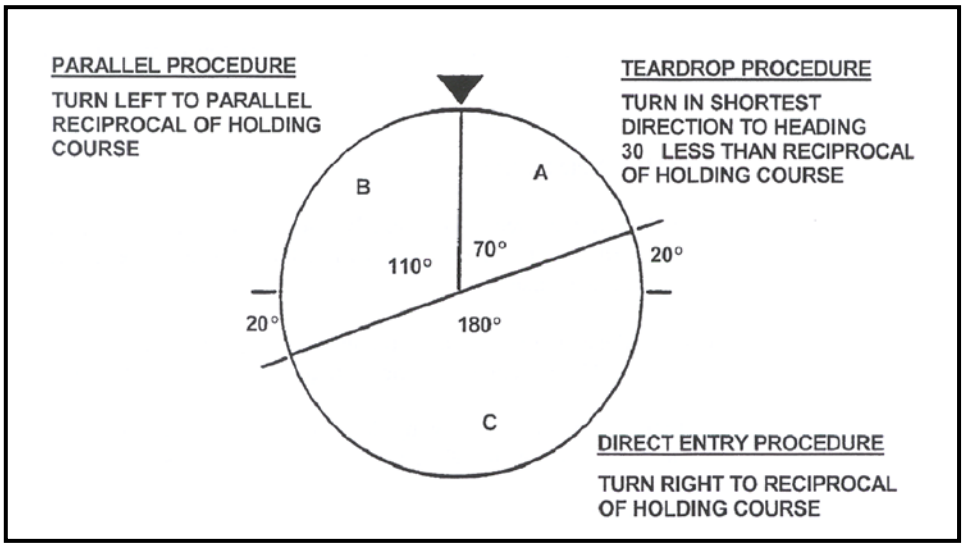

Figure 6–19 Standard Holding

iii. **Non–Standard Holding** (Figure 6–20)

(a) Sector A (TEARDROP) – If the reciprocal is between the heading index and 70º to the left of the heading index, make a Teardrop entry. This is accomplished by turning in the shortest direction (left or right) to a heading that is 30º more than the reciprocal.

(b) Sector B (PARALLEL) – If the reciprocal is between the heading index and 110º to the right of the heading index, make a right turn to parallel the holding reciprocal.

(c) Sector C (DIRECT ENTRY) – If the reciprocal does not meet the criteria listed in (a) or (b) above, turn left to the reciprocal of the holding course

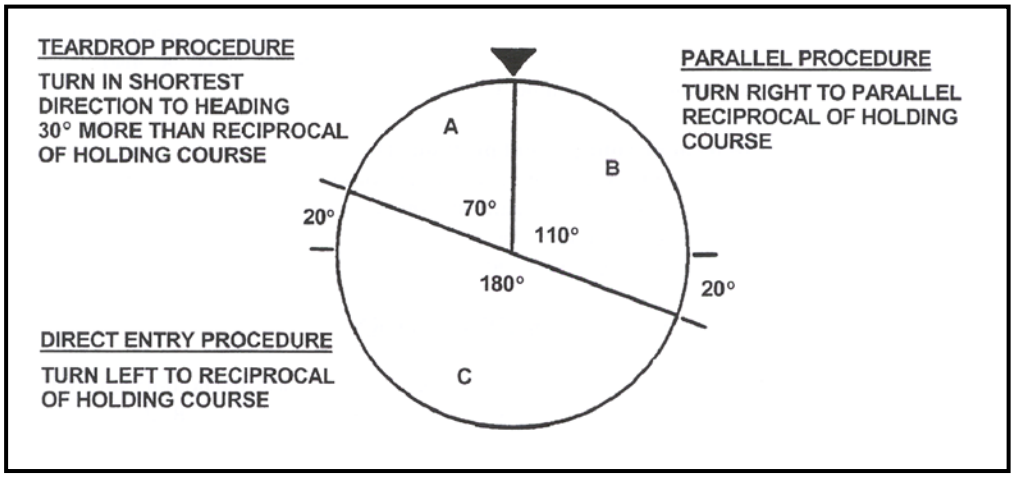

Figure 6–20 Non–standard Holding

d. Entry Orbit.

i. The first time the aircraft crosses the holding fix commence the entry orbit.

ii. Perform the following (6 T's):

(a) **TIME** – Note the time.

(b) **TURN** – In the direction previously determined. With the exception of a Teardrop entry, the heading will be the same as the reciprocal of the holding course.

NOTE

Make all turns during entry and while holding at a standard rate or 30º bank angle, whichever requires the least AOB.

(c) **TIME** – Start timing when wings level or abeam the station (tail of the needle crosses a radial 90º perpendicular to the no wind outbound heading), whichever occurs last.

(d) **TRANSITION** – Transition to slow cruise.

(e) **TWIST** – Put the holding course in the IND–350. This may be done any time after the initial turn, but must be completed prior to the inbound turn.

(f) **TALK** – Give the voice report.

iii. After completion of outbound timing or at the specified DME (TACAN holding), turn to intercept the holding course inbound. To remain within holding airspace, a turn in the proper direction must be made. The direction of turn will be determined as follows:

(a) **Determine your present position.** Do this by visualizing yourself on the tail of the needle. Turn toward the holding radial. In Figure 6–21A, the aircraft is on the 70º radial and the holding radial, 90ºR is to the right, indicating a right turn. In Figure 6–21C, the aircraft is on the 110º radial and the holding radial, 90ºR is to the left, indicating a left turn.

Remember**: <u>TAIL</u> – <u>RADIAL</u> – <u>TURN</u>**

(b) If the aircraft is on the holding radial, turn towards the holding side of the pattern to remain within protected airspace). Figure 6–21B illustrates this situation.

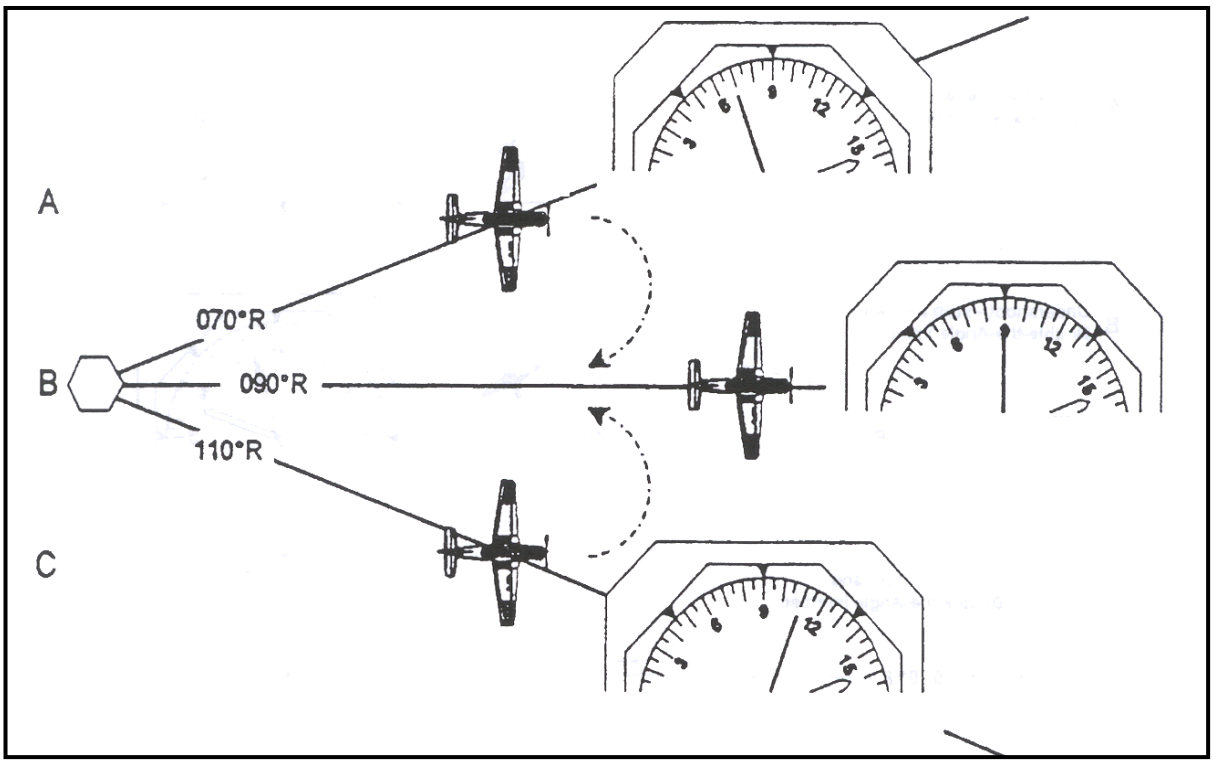

Figure 6–21 Determining Turn Direction

iv. During the last half of the turn check the position of the head of the needle relative to the holding course. This will enable you to determine whether you will roll out on the holding course. If the aircraft is on the holding course at the completion of the turn, simply track inbound on the holding course. If not on course, stop the turn with a double–the–angle intercept for VOR holding. When turning to intercept the inbound course in TACAN holding, an intercept greater than "double–the–angle" will be required. This is to compensate for the greater spacing between radials when holding away from the station. In TACAN holding a 30 to 45 degree angle of intercept will establish the aircraft on the inbound course. Once established on course, commence tracking inbound to the holding fix. It is critical to establish the aircraft on course prior to crossing the holding fix.

In Figure 6–22A, the aircraft will be on the holding course at the completion of the turn. Although the head of the needle is not directly on 270º at the point illustrated, it will fall the remaining few degrees during the completion of the turn. Figure 6–22B shows an undershoot situation. The head of the needle is on 255º, 15º away from the holding course of 270º. Stopping the turn on 240º (15º away from 255ºs) sets up a double–the–angle intercept. Check to be sure the head of the needle is in a position to fall to the desired course. Figure 6–22C is an overshooting situation. Again, the turn is continued until a double–the–angle intercept is established.

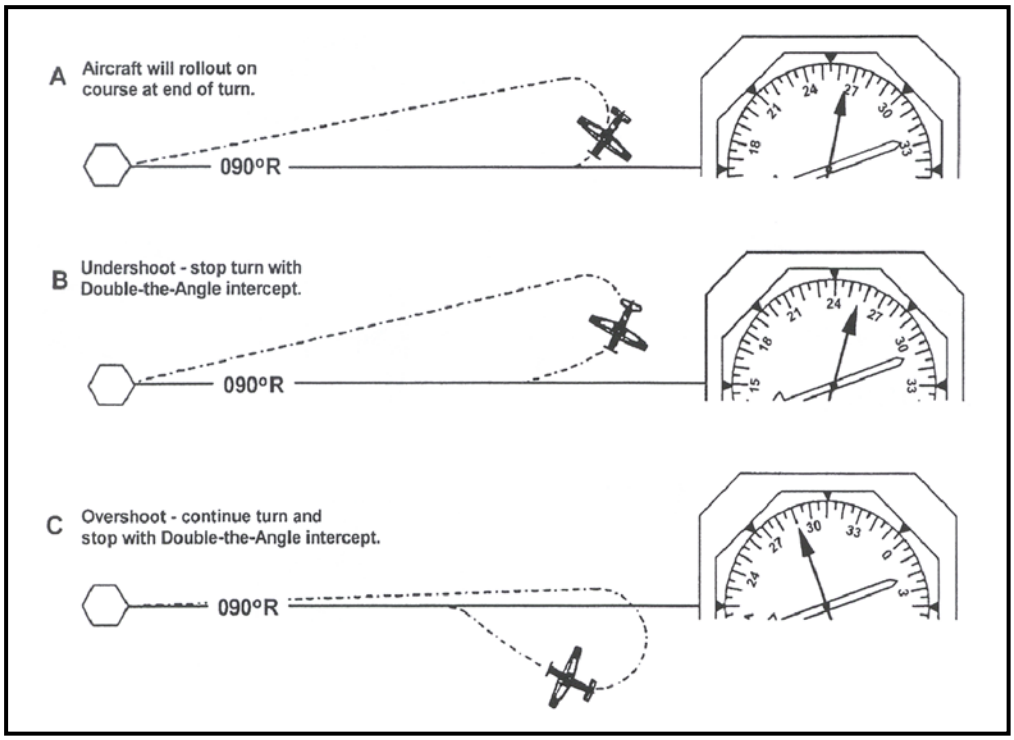

Figure 6–22 Turning Inbound to Holding Fix

e. No–wind Orbit.

i. The second time the aircraft crosses the station, commence the "no–wind" orbit. This orbit is flown as if there were no wind for which to compensate. If this were true, you would (1) roll out of your inbound turn on the holding course, and (2) inbound timing to the holding fix (if required) would equal the amount of time outbound in holding. If conditions (1) and/or (2) are not met, this indicates there are winds that must be corrected for. Just how far, and in what direction you deviate from (1) and (2) allows you to determine time and heading correction factors. Applying these factors to a "no–wind" orbit gives you a correction orbit. Correction orbits are flown so you can meet conditions (1) and (2). Commence the "NO WIND" orbit as follows:

ii. Make a Standard–Rate Turn. Turn right for standard holding, left for non–standard holding.

NOTE

It is extremely important to hold a Standard–Rate Turn at a constant airspeed (slow cruise) throughout all turns. If the AOB and airspeed varies during the turn, it is difficult to determine the wind for the correction orbit.

iii. Roll out of the turn on the outbound heading to parallel the holding course. This heading will be the same as the reciprocal of the holding course.

iv. Start the outbound leg timing (if required), when wings level or abeam the station, whichever occurs last.

v. At the completion of outbound leg timing or at the specified DME, turn towards the holding radial to intercept the holding course inbound. Remember: **TAIL – RADIAL – TURN**. At the completion of the turn, you will either be inbound on the holding course or have an intercept set.

vi. Once wings level inbound, start timing if required. (Steps (vi) and (vii) should be accomplished as quickly as possible.)

vii. As you roll wings level, check the position of the head of the needle relative to the holding course. If they differ, note the number of degrees difference. This will determine the amount of heading correction to use on the outbound leg of your correction orbit. Do this as quickly as possible.

viii. If you had to set an intercept when you turned inbound, there are winds to correct for. Use the following method to determine what direction the wind is FROM: While the intercept angle is set, visualize a line drawn from the tail of the needle through the radial to the nearest cardinal heading. The wind is FROM this approximate direction. Remember: **TAIL – RADIAL – WIND**. For ease in computing headings on correction orbits, always think of the wind as being from north, south, east or west and not left or right.

ix. Establish the aircraft on the holding course and track inbound to the holding fix.

x. At station passage, note how much time has elapsed (if required) on the inbound leg. Determine the difference between the elapsed time and the desired inbound timing. You will use this correction factor for timing on the outbound leg of your correction orbit.

xi. Figure 6–23 illustrates a typical no–wind orbit. The inbound turn resulted in an overshoot and a double–the–angle intercept was set. The Tail–Radial–Wind rule indicates a wind from the north. With a 15º heading correction factor, the inbound timing of 50 seconds indicates a 10–second timing correction factor.

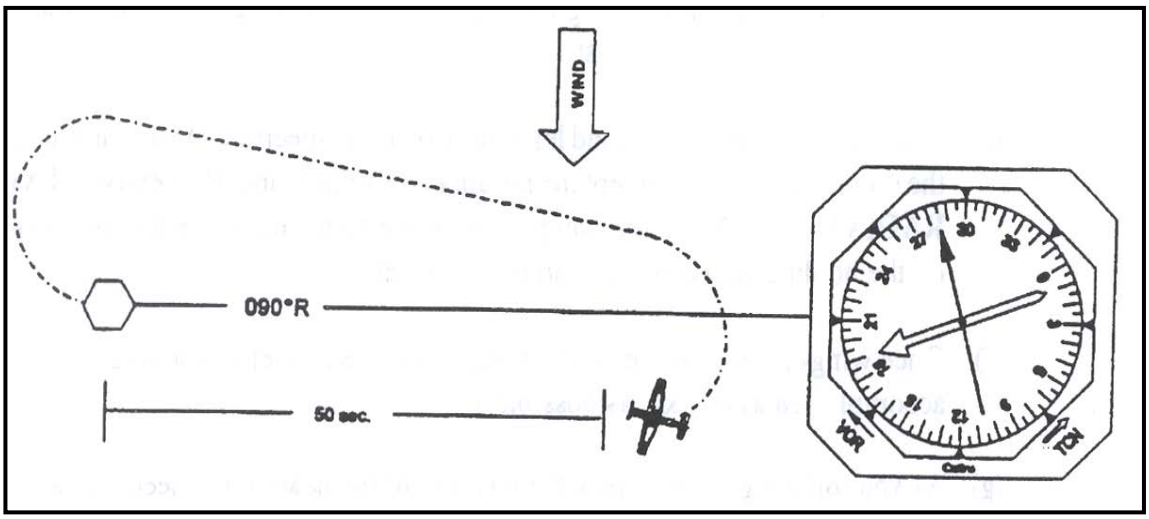

Figure 6–23 No–Wind Orbit

f. Correction Orbit.

i. The third and subsequent orbits in holding are called correction orbits. Correction orbits are flown by applying the correction factors determined on the previous orbit to the outbound leg of the holding pattern.

ii. Using Figure 6–23 as an example, we will apply our heading correction to the outbound leg. The wind is from the north and the correction factor is 15º. The no–wind outbound heading would be 90º, and 15º north of this is 75º. Therefore, use 75º as an outbound heading on the correction orbit.

iii. The inbound leg in Figure 6–23 took 50 seconds, indicating a tailwind component with a 10–second correction factor. To make the inbound leg a full 60 seconds, longer outbound timing is needed. Apply the 10–second factor to 60 seconds (original outbound timing). The outbound timing on the correction orbit is then 70 seconds. If the inbound leg of the "no–wind" orbit was longer than 60 seconds, use the timing correction factor to shorten the next outbound leg.

NOTE

For simplicity, wind is thought of as being from a cardinal heading in holding. An examination of Figure 6–23 shows the wind must actually be from the northeast, since the inbound leg was 50 seconds; however, for ease in determining heading corrections it is best to think of winds as being from cardinal headings.

iv. If your outbound heading correction was sufficient, you will be on course at the completion of your inbound turn. When tracking inbound to the holding fix, a

correction into the wind of approximately one-third of that used outbound should keep the aircraft on course.

v. If the corrections determined in the no–wind orbit do not put you on course for the desired timing on the first "correction orbit" inbound leg, you must "recorrect" the next outbound leg. The amount, direction, and time to correct are determined exactly as in the no–wind orbit, but the corrections must be applied to the heading and timing used on the previous outbound leg – NOT THE FIRST OUTBOUND LEG. It may take several orbits to get the heading and timing exactly right. Figure 6–24 shows a correction orbit that worked out perfectly, a rare case in practice.

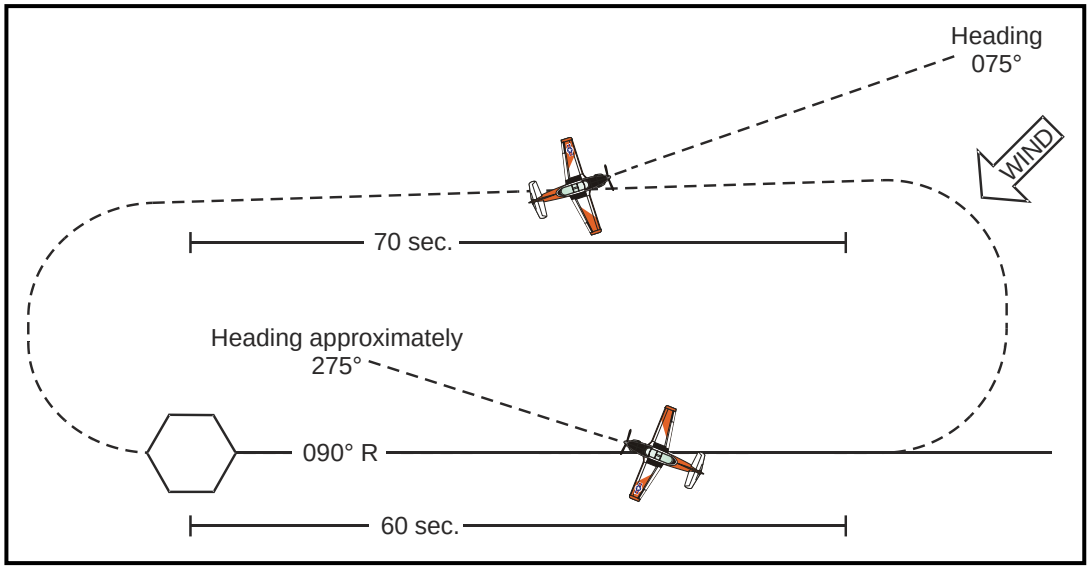

Figure 6–24 Correction Orbit

g. Confirm expected further clearance (EFC) time.

Confirm EFC time with approach control at least five minutes prior to the EFC. Receipt of EFC is not a clearance to commence approach at that time unless you have lost communications with ATC.

h. Cleared out of holding.

i. It is very important to listen to your approach clearance once established in holding. If established in a published holding pattern and subsequently cleared for the Holding Pattern Approach, you may commence the approach from within the holding pattern and descend to the IAF altitude (Figure 6–38). If established in a holding pattern and subsequently cleared for an approach other than a Holding Pattern Approach, you must maintain last assigned altitude or the published minimum holding altitude, whichever is lower, until established on a segment of the approach (Figure 6–42).

ii. Airspeed when departing holding is at pilot's discretion. Use good judgment and determine if it is more appropriate to maintain slow cruise or transition to normal cruise. This decision should be based on your intentions departing holding (continue enroute or commence an approach) and the aircraft position in relation to the instrument approach (if conducting an approach from holding).

6. **Common Errors**

a. Doing an over–the–station intercept to intercept the holding radial outbound. Remember, the outbound leg in the holding pattern is a heading to fly.

b. Twisting in the reciprocal vice the course.

c. Starting the outbound leg timing when the wings roll level vice when the wings roll level or abeam the station, whichever occurs last.

d. Misinterpreting wind direction through disorientation, improper use of the Tail–Radial–Wind method, or using a Head–Radial–Wind method.

e. Attempting to correct for crosswind by shallowing or steepening the turn inbound. This technique may work, but it leads to sloppy Basic Instrument airwork, and should not be practiced.

f. Not intercepting the holding course on each orbit. If the aircraft is not established on the holding course at station passage, the wind corrections you have determined will not be accurate.

g. Using an insufficient intercept angle to acquire the inbound course.

h. Not holding Standard–Rate Turn and constant airspeed (slow cruise) during all turns. Impossible to correct for winds, if airwork is not consistent throughout the orbit.

616. HOLDING DURING ADVERSE WIND CONDITIONS

It is not unusual for winds aloft to attain velocities in excess of 20 knots. In these circumstances, some modifications to the holding procedures discussed earlier may be necessary. Just how much you modify normal holding procedures will, of course, depend on wind speed and direction. If you feel you need to use modified procedures, be sure to discuss this with your instructor.

You should be able to predict high winds prior to entering the holding pattern. Pay attention to the forecast winds aloft. During the enroute phase a high crosswind component would be indicated by the need for an abnormally large drift correction. A high headwind or tailwind would be indicated by a groundspeed that differs significantly from predicted values.

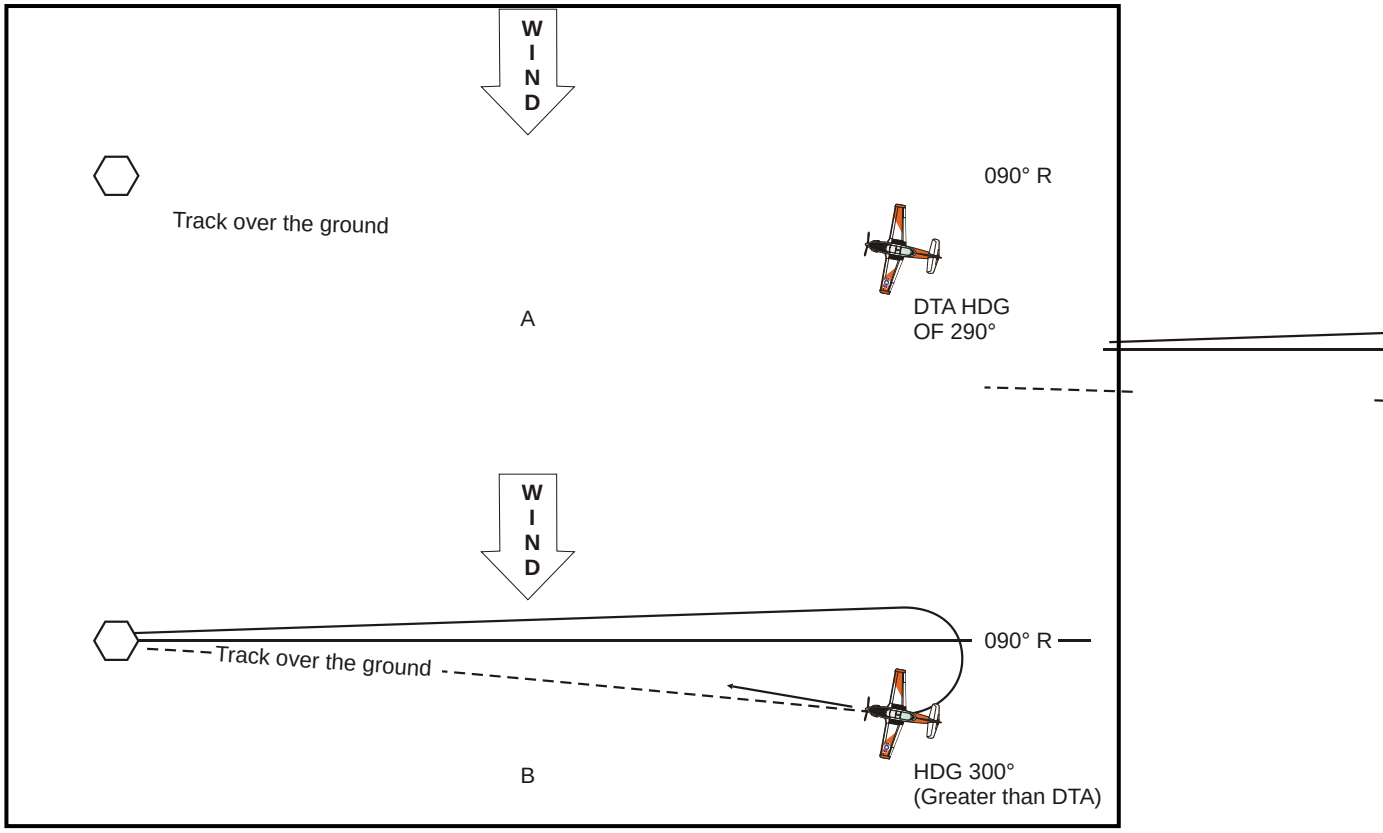

Figure 6-25 Entry Orbit

ENTRY ORBIT

On a normal entry orbit, you utilize a double–the–angle (DTA) intercept to intercept the holding course after you turn inbound. In high winds, DTA may not do the trick. To understand why, examine Figure 6–25A. In this example, our holding pattern is oriented EAST of the NAVAID on the 90º radial. There is a strong wind from the NORTH. The aircraft has flown the outbound leg of the entry orbit and turned, stopping the turn with a DTA set. In this case, a DTA heading of 290º merely counteracts drift and does not effect an intercept. This situation requires an intercept greater than DTA.

In Figure 6–25B, a heading of 300º is being flown. This is enough of a cut into the wind to counteract drift and get you back on course.

NO WIND ORBIT

The outbound leg of the orbit would, of course, be unchanged. The no–wind heading would be held for one minute (or specified distance if holding at a DME fix). Next comes your inbound turn. Normally you would expect a right turn for a standard pattern and a left turn for nonstandard. This may not be the case. Look at Figure 6–26. Again, it is a standard holding pattern EAST of the NAVAID on the 90ºR. Here, at the end of your outbound, no–wind leg the

high NORTH wind has blown you SOUTH of the 90º radial. Since we always turn in the shortest direction toward the holding radial (TAIL–RADIAL–TURN), a left turn is necessary. Always check your position relative to the holding radial before an inbound turn.

The situation illustrated in Figure 6–26 has the potential to create some additional confusion. To illustrate this, consider Figure 6–27, a further development of the situation in Figure 6–26. If you turn left at point "A" (as required), your radius of turn could carry you over to the NORTH side of the 90º radial. You would then stop the turn with an intercept set and figure wind direction at point "B." Using the TAIL/RADIAL/WIND method indicates a SOUTH wind and we know this is not the case. Remember, if you have to turn opposite the anticipated direction on the inbound turn of your no–wind orbit, there are strong winds affecting you. Be aware of this when determining wind direction.

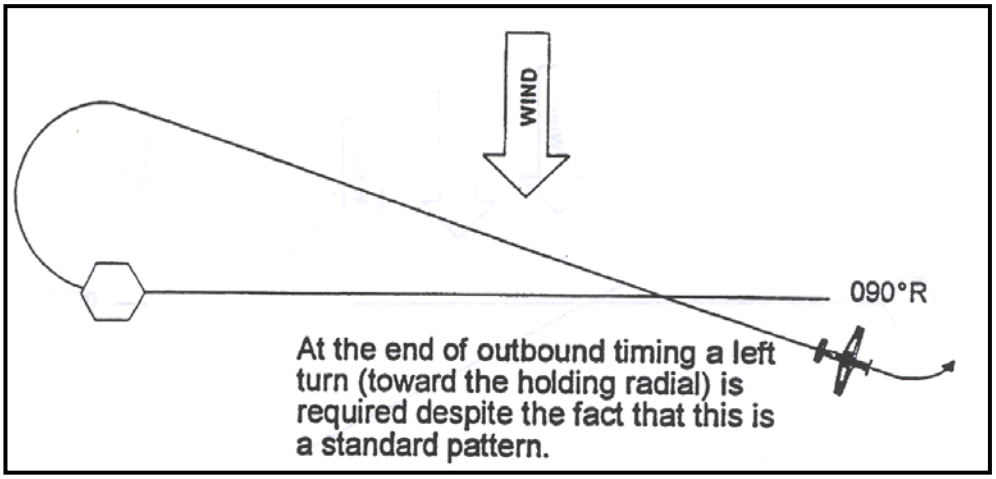

Figure 6–26 No–Wind Orbit

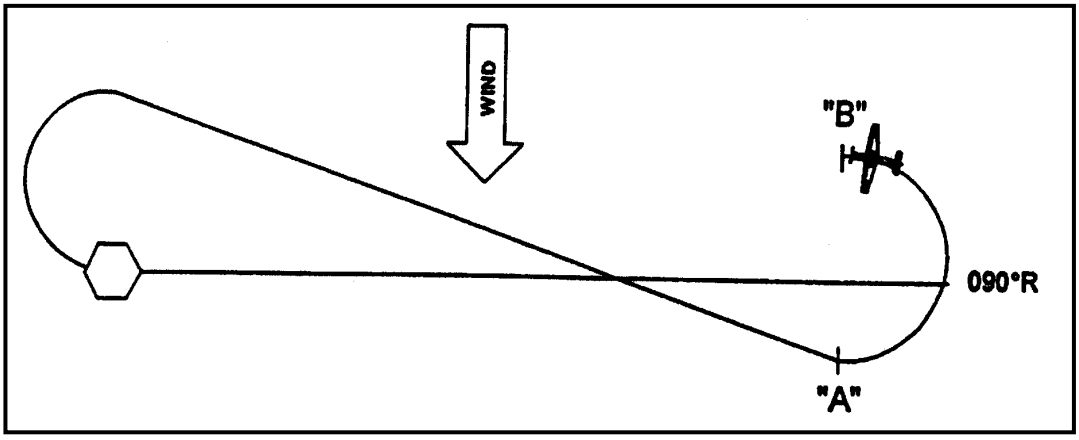

Figure 6–27 No–Wind Orbit

A variation of this problem could occur in the case of an EXTREMELY STRONG WIND. In Figure 6–28, we again turn left at point "A." In this situation, the wind is so strong that it cancels

out the radius of turn and you are still on the SOUTH side of 90º radial at the end of your turn (point "B"). Using TAIL/RADIAL/WIND correctly indicates a NORTH wind, but it would make it appear to be considerably less in magnitude than what it actually is. Again, the solution is to be aware of the wind and how it affects you.

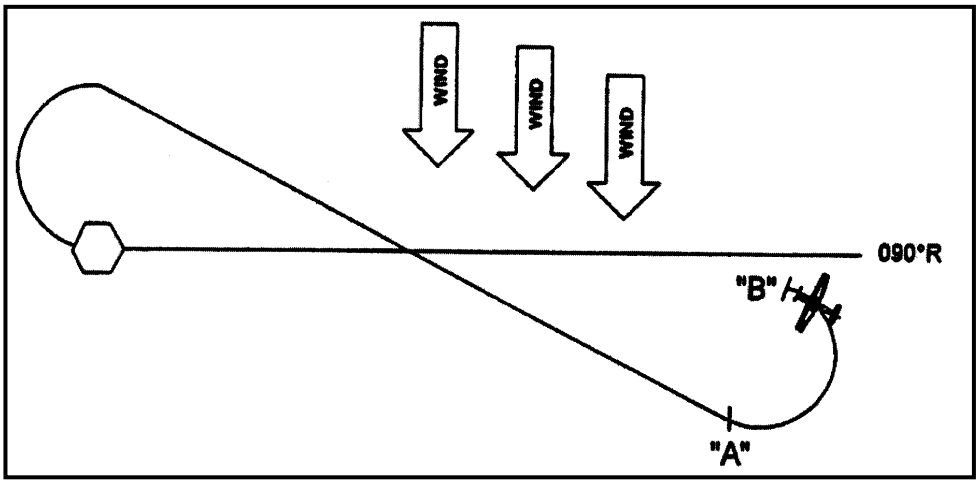

Figure 6–28 No–Wind Orbit (Extremely Strong Wind)

CORRECTION ORBITS

In the situation described on the previous page, it is obvious we need a wind correction to the NORTH on our correction orbits. However, just how much of a correction is needed? In these situations, there is no "rule" to follow in determining outbound heading. You will just have to use your own judgment. If the winds are strong, you will probably need at least 20º of correction and maybe more.

HIGH HEADWINDS

Another problem in holding patterns that require timing is encountered if we have a strong headwind component when inbound to the holding fix. For the first correction orbit, a minimum time of 30 seconds outbound will be used. In any event, it is essential that you clear the cone of confusion in order to fix your position relative to the holding fix. If, after repeated correction orbits, you determine you need to eliminate outbound timing entirely, you have an extremely strong headwind. When you cross the holding fix inbound, start a Standard–Rate Turn in the proper direction. Roll wings level momentarily on the wind corrected outbound heading, then continue the turn until you are established inbound to the fix.

NOTE

If wind speed and its angular relationship to the holding pattern make holding difficult, consider requesting a different pattern that is more suitably oriented with respect to the wind.

617. TACAN HOLDING

Reference: NIFM Part V, "TACAN Holding."

1. **Amplification –** TACAN holding is a procedure used to delay aircraft at a TACAN fix until further clearance may be obtained from Air Traffic Control. TACAN holding is accomplished at a DME fix away from the station. The TACAN pattern can be orientated on any course, radial or route directed by the controller when not a published holding pattern. Figure 6–29. (TACAN holding is not generally flown over the station due to the large cone of confusion as compared to VOR.)

This form of holding is commonly encountered at the Initial Approach Fix (IAF) for an Arcing or Straight–in Approach Procedure. ATC will normally clear an aircraft from its present position direct to the IAF for TACAN holding. Employ TACAN Point–to–Point procedures. Two examples are depicted using the TACAN RWY 17 approach at Corpus Christi, TX, and the TACAN RWY 23 approach at Whiting Field, FL (Figures 6–30 and 6–31).

Holding at an enroute fix, utilizing DME is also possible. Figure 6–32, holding at REDDI, is an example of this situation.

2. **Procedure –** Procedures for TACAN holding are basically the same as VOR station holding; however, the following amplifying information is provided:

a. Certain holding patterns will be published as a part of an approach plate or a low altitude chart. ATC will not issue a detailed holding clearance for these patterns. A sample of this type clearance would be:

APP CONT: *"Navy _____ ,_____ Approach, hold as published at the Initial Approach Fix (or IAF Name) for the TACAN RWY 17/23 approach at destination. Time now 57, expected further clearance time 20, destination weather, 900 broken, visibility 2 miles with light rain, altimeter 30.06, duty runway ____."* (Figures 6–30 and 6–31).

b. The holding clearance, if not "hold as published," will specify the length of the legs.

NOTE

If the holding fix is on an airway, you may not be assigned a holding radial. Use the radial that defines the airway. When holding on an airway expect either a one minute (timed) pattern or leg lengths as specified by ATC.

A sample clearance:

APP CONT: *"Navy, Center, hold south of REDDI on V115, use three mile legs, time now 57, expected further clearance at time 20."* (Figure 6–32).

c. Turns are commenced upon reaching specified DMEs (timing is not involved if the leg lengths are specified by DME). Your radius of turn will carry you slightly beyond these points. ATC is aware of this.

d. When turning to intercept the inbound course in TACAN holding, an intercept greater than "double–the–angle" will be needed. Normally a 30 to 45 degree angle of intercept will establish the aircraft on the inbound course. Lead the turn to establish the aircraft on the inbound course. This is to compensate for the greater spacing between radials when holding away from the station. For example, at 2 NM from the station, a 6º course error represents one–fifth NM off course. Twenty NM from the station, the same 6º course is 2 NM off course. Discuss with your instructor the appropriate amount of intercept under varying circumstances.

e. Determine wind direction using the same method from VOR station holding **(TAIL–RADIAL–WIND)**. During VOR holding, the number of degrees of crab, used on the outbound leg, equals the number of degrees off course after the inbound turn on the no–wind orbit. This will not work as well in TACAN holding, again due to the greater radial spacing further from the station.

The following method will aid in determining wind corrections during TACAN holding. Refer to Figure 6–29. Here the aircraft is holding between 12 to 15 DME on the 45º radial.

i. Determine the outermost leg length - in this case 15 DME.

ii. Determine the length of the holding pattern - 3 NM.

iii. Divide the outermost leg length by the length of the holding pattern. 15 ÷ 3 = 5 degrees**.** This is the correction factor for every radial you are off course.

For example: You just completed your outbound leg of the no–wind orbit at 15 DME. During your turn onto the holding radial, you determine you are 4º off course. Use the normal tail–radial–wind method to determine wind direction.

iv. Apply the wind correction on your correction orbit: 4º error x 5 correction factor = 20º crab angle into the wind on the outbound leg of the correction orbit. Remember to use half (10º) the crab angle on the inbound leg.

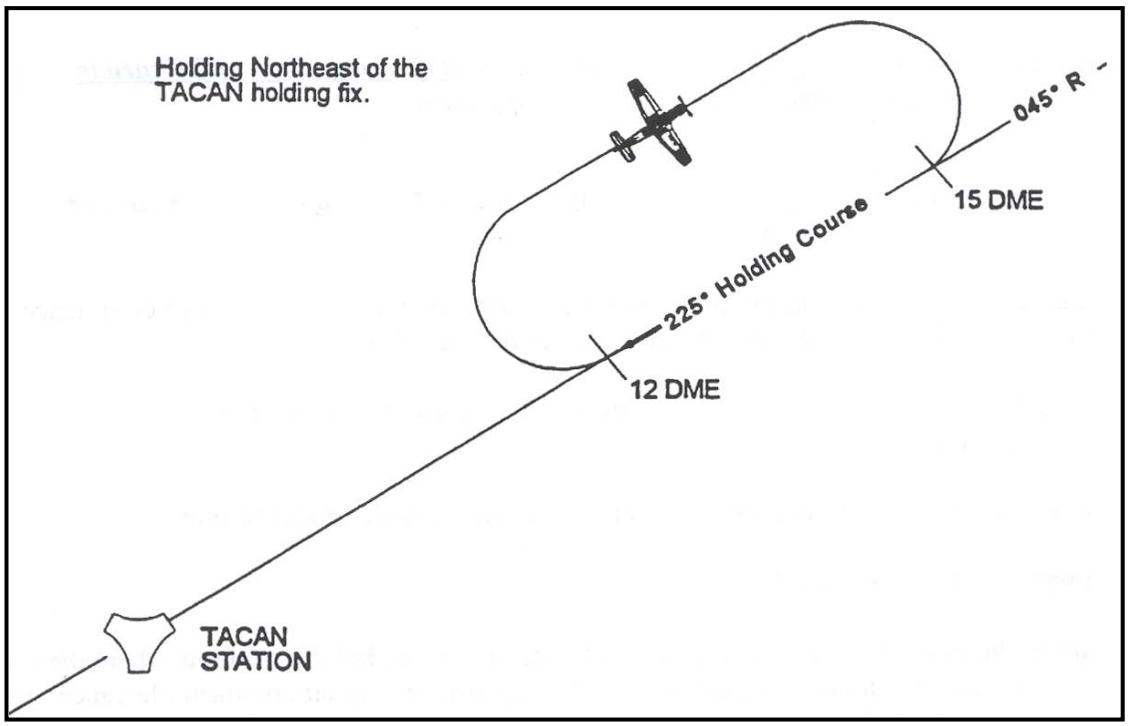

Figure 6–29 TACAN Holding Fix

The direction of TACAN holding is relative to the holding fix - NOT the station.

3. **Common Errors**

a. Holding on the wrong side of the DME fix.

b. Using an insufficient intercept angle to acquire the inbound course.

618. CLEARANCE FOR AN APPROACH WHILE IN TACAN HOLDING

If established in a **PUBLISHED TACAN HOLDING PATTERN** and subsequently cleared for the approach, you may commence the approach from within the holding pattern.
It is very important to listen to your approach clearance once established in holding. Listed below are possible types of clearances you may receive:

"Navy_____ , _____ Approach, at the completion of this turn in holding you are cleared for the _____ approach."

or

"Navy_____ , _____ Approach, at IAF name, you are cleared for the _____approach,...."

In the case of 1) and 2) above, the pilot would complete his/her turn in holding and commence the approach at the IAF. Listen for any altitude restrictions from ATC.

> *"Navy,_____, _____ Approach, you are cleared for the approach."*

In this case, the pilot is NOT required to complete the turn in holding and he/she **may**:

1. **Turn** immediately towards the IAF.

2. **Descend** to the published mins holding altitude. For those holding patterns where there are no published mins holding altitudes, the pilot, upon receiving an approach clearance, must maintain the last assigned altitude until leaving the holding pattern and established on the inbound course. Thereafter, the published mins altitude of the route segment being flown will apply.

3. **Accelerate** to 150 knots (at pilot's discretion, see TACAN Arcing Approach Procedures).

If holding at the IAF, NOT IN A PUBLISHED holding pattern and subsequently cleared for the approach. You may:

1. **Turn** to the IAF.

2. **Accelerate** to 150 knots (at pilot's discretion, see TACAN Arcing Approach Procedures).

3. **DO NOT DESCEND** until on a published segment of the approach (most likely on the arc).

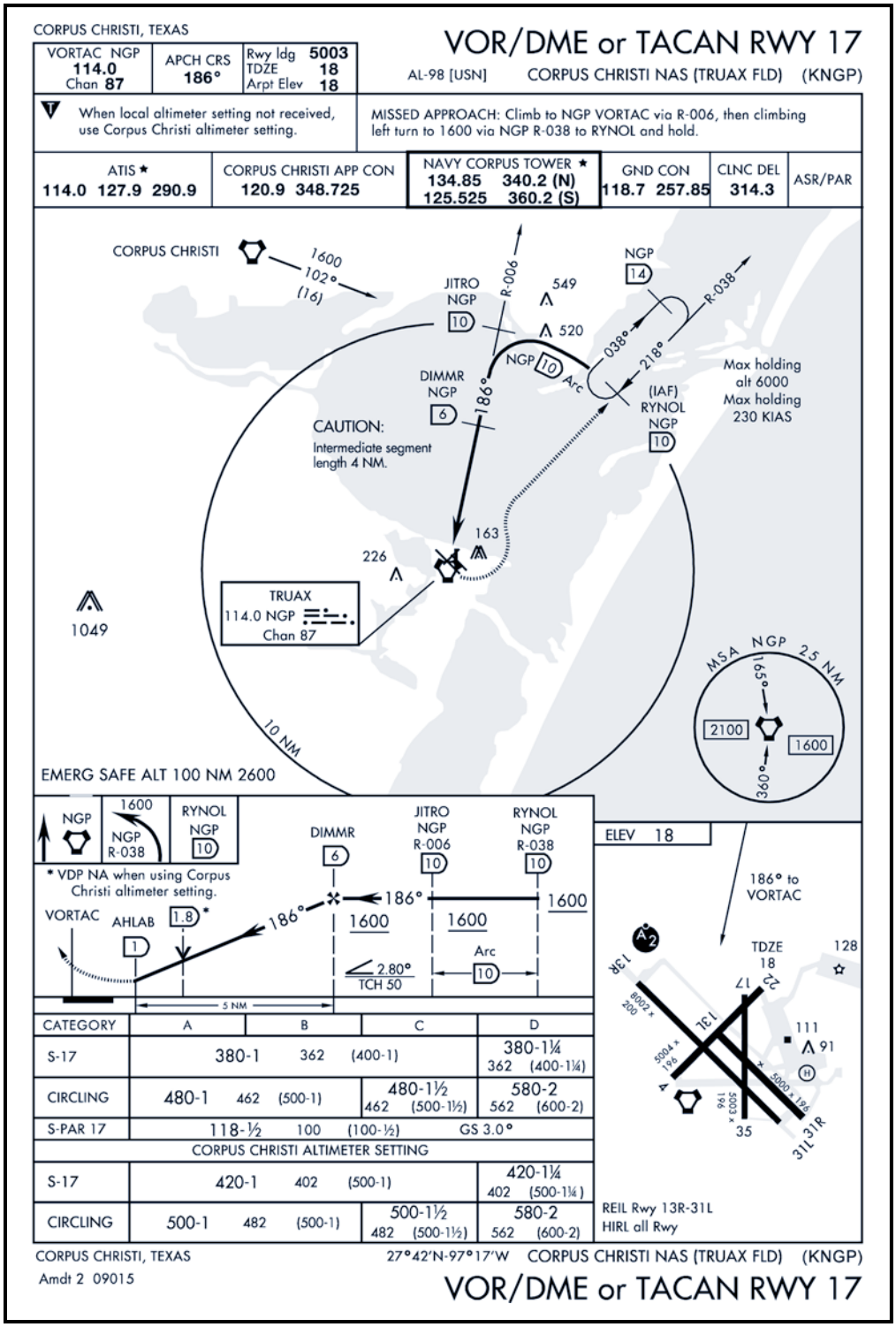

Figure 6–30 VOR/DME or TACAN RWY 17 (KNGP)

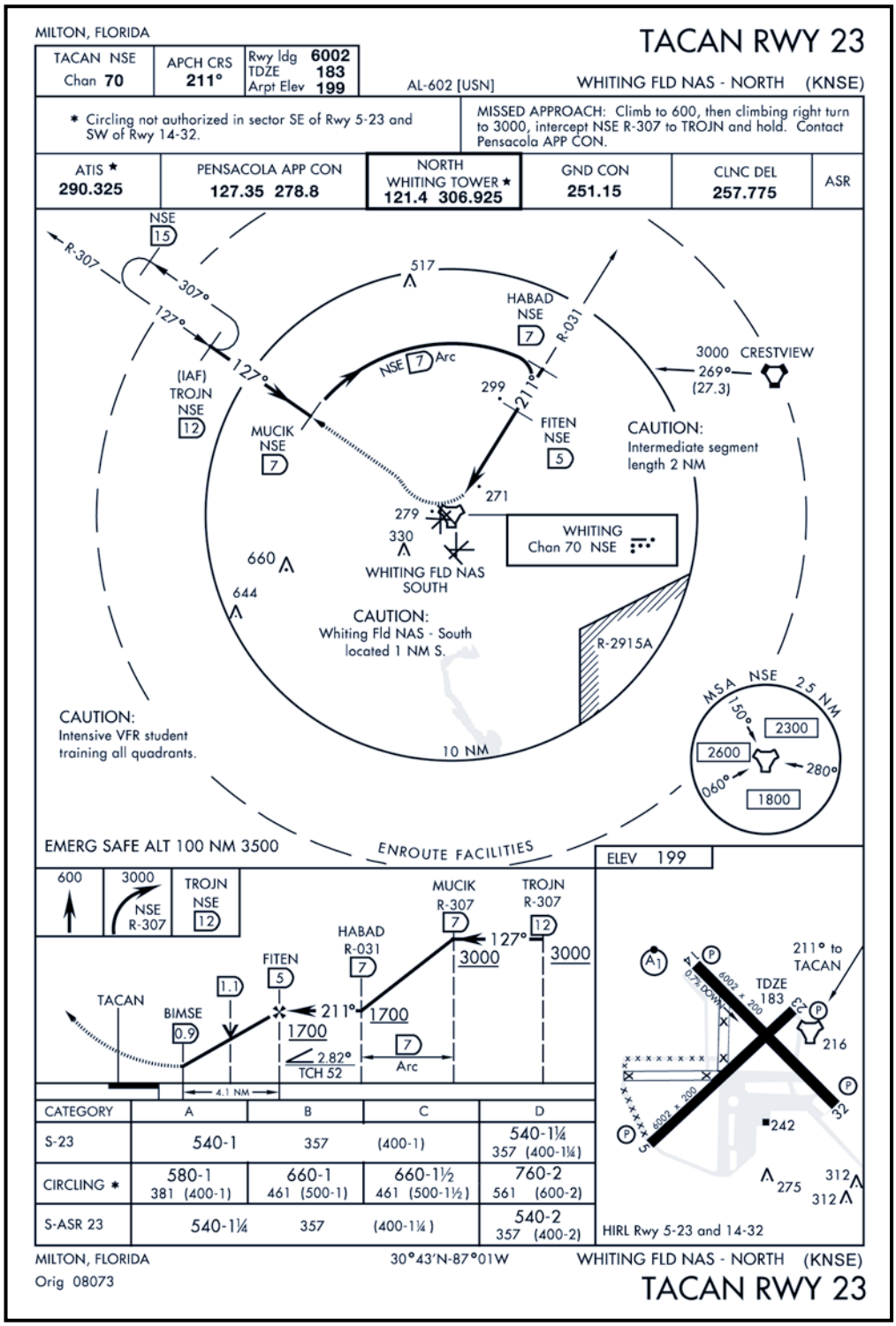

Figure 6–31 TACAN RWY 23 (NSE)

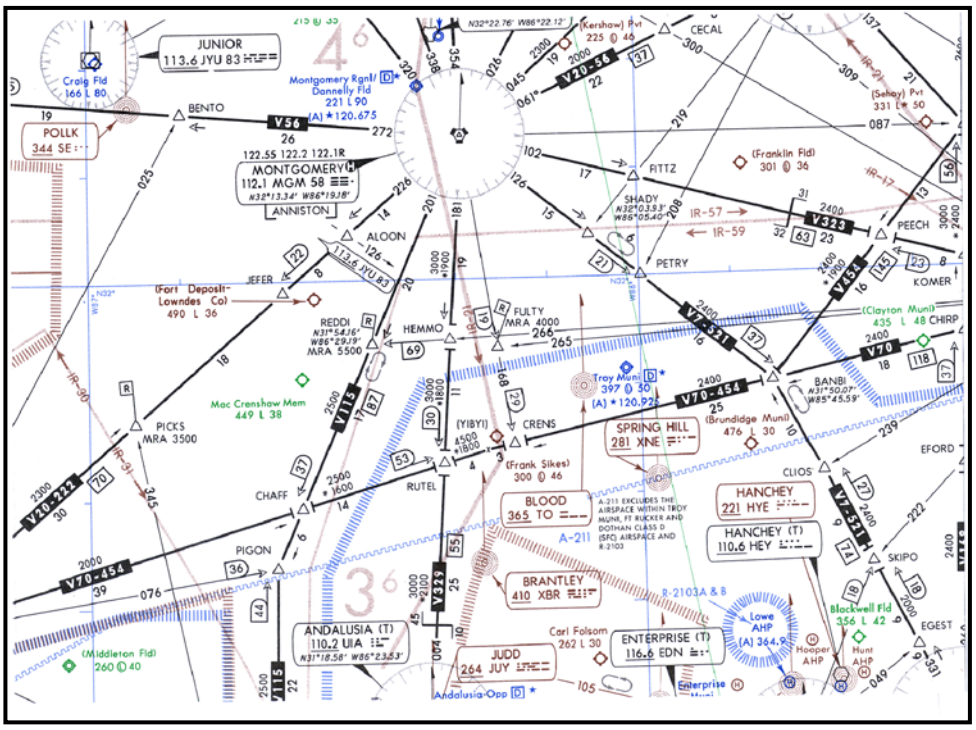

Figure 6–32 Holding at a DME Fix (REDDI)

619. SHUTTLE DESCENT

1. **Amplification** – A shuttle descent is the procedure used in holding to position your aircraft at a lower altitude. Descents in holding are normally initiated by ATC. If several aircraft are in holding at the same fix, they will be placed in "stack" with altitude separation (usually 1000 feet). Shuttles will be used to descend each aircraft to the next lower stack altitude after the bottom aircraft in the stack has commenced his approach.

2. **Procedure**

a. Report leaving current altitude for assigned altitude.

b. Reduce power to 300 ft–lbs.

c. Lower the nose to maintain 120 knots.

d. Retrim.

To level off:

e. Twenty-five feet prior to leveloff altitude, begin the transition by resetting power to 450–500 ft–lbs.

f. Raise the nose to the slow cruise attitude.

g. Retrim.

3. **Common Errors**

a. Fixating on altitude, thereby failing to maintain AOB in the Standard–Rate Turns.

b. Neglecting timing and/or wind corrections. You must continue flying the pattern while in the descent.

NOTE

Wind corrections at one altitude may not work at a lower altitude. Heading and timing adjustments may be required. If these adjustments do not work, fly a complete no–wind orbit again to determine the new winds.

620. TACAN POINT–TO–POINT NAVIGATION

Reference: NIFM Part V, "Technique of Navigating Point–to–Point."

1. **Amplification** – Point–to–Point Navigation is a procedure used to fly from one TACAN fix to another using a direct track. When an aircraft approaches a terminal area, Air Traffic Control normally clears it to a holding fix or an Initial Approach Fix. If cleared direct to the fix, the pilot may be radar vectored or employ Point–to–Point Navigation.

When cleared direct from one point to another, you must determine the heading to fly. One method of determining this is to plot both points on a suitable chart and connect them with a straight line. The heading to fly is the heading along this line. An alternate technique, which eliminates cumbersome charts and line drawing, will require you to visualize the aircraft's present position and the desired fix on the compass card of the RMI. This method may be used to navigate directly to any fix within reception range of the NAVAID. The following concepts will aid in developing this ability.

The TACAN station is always at the center of the compass card. The compass card is merely a compass rose around the station.

The fix having the greater distance is always established on its radial at the outer edge of the compass card.

The remaining fix is established along its radial at a proportional distance from the center of the compass card.

When applying the above concepts, the compass card can be thought of as a chart. On this chart, you have plotted your present position, the desired fix, and the TACAN station (at the center). With an actual chart, you could draw a line between the two fixes to determine no–wind heading. Using the compass card you visualize this line between fixes.

The following example and the illustrations in Figures 6–33 and 6–34 demonstrate the procedures for flying from one TACAN fix to another TACAN fix. The aircraft is on the 180º radial at 20 NM and you want to navigate to the 90º radial at 10 NM.

2. **Procedures**

a. Tune and identify the station.

b. Turn in the shortest direction to a heading between the head of the RMI needle and the desired fix radial. If going to a smaller DME, favor the head of the needle. If going to a larger DME, favor the desired radial.

NOTE

The Instrument Approach Plate may be used as an aid to visualize your position and the initial heading required to fly to the fix.

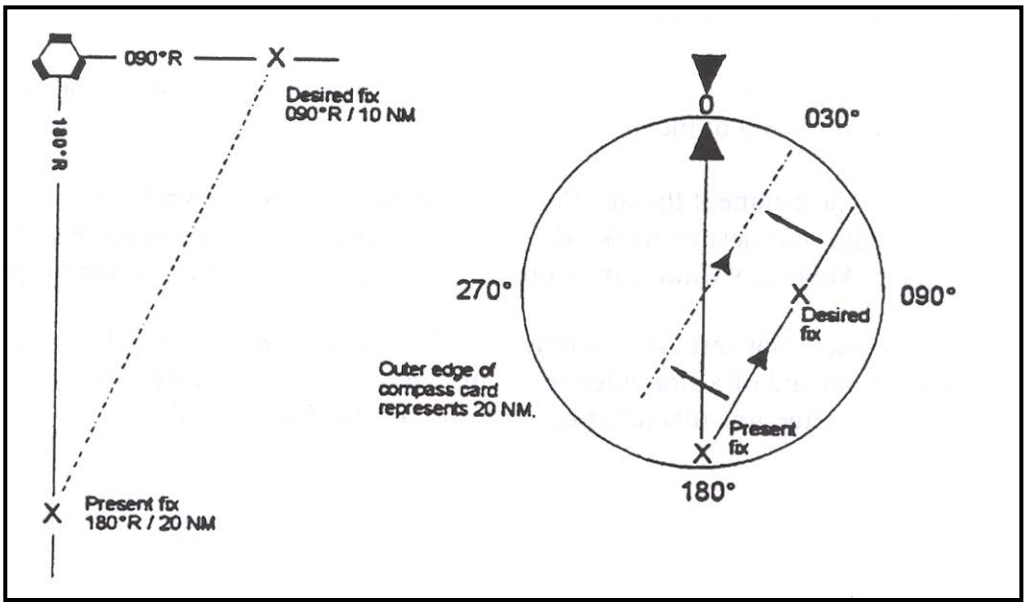

Figure 6–33 TACAN PTP

c. Establish the fix with the greater distance (20 NM) at the edge of the compass card on its radial (180º).

d. Establish the remaining fix (90º radial/10 NM) along its radial at a proportionate distance from the center of the card (halfway).

e. Draw an imaginary line with the aid of a pencil, finger, etc., FROM the aircraft's present position through the next fix. Move the "line" to the center of the card and read the no–wind heading to the desired fix (approximately 30º in this case).

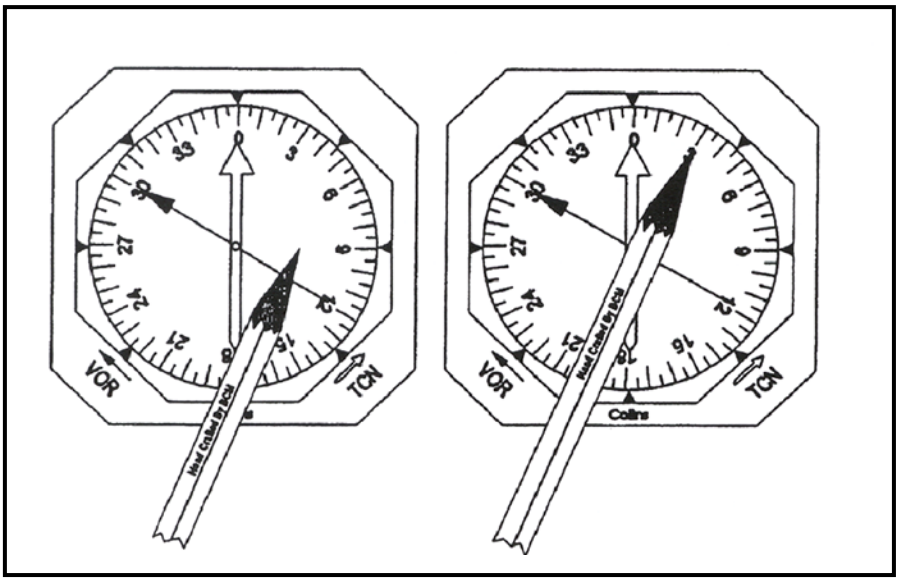

Figure 6–34 Calculating a PTP in the cockpit

f. Turn to this updated heading.

NOTE

Try to expedite these first six steps to establish the aircraft on a heading that will take it in the general direction of the new fix.

g. Visually determine if the line that connects the two fixes is vertical. This line represents your desired track. If it is vertical, you are on the correct heading at that instant. Apply any wind corrections that are required to remain on the proper track.

h. If your line is not vertical, you must turn the aircraft to make it so. This can be done without the aid of a straightedge. If the line tilts right, turn right to make the line vertical. If the line tilts left, turn left to make the line vertical.

i. While enroute, twist in the desired fix radial or course to provide correct sensing and enable you to accurately identify the fix. Toggle the VOR/TAC selector under the altimeter to TACAN.

CORRECTIONS

j. As the aircraft approaches the point, it will be necessary to determine which you will reach first – the radial or the DME. To come as close as possible to the new point, it will be necessary to judge the rate at which the DME is moving and the rate at which you are crossing radials. If it is determined that one rate is moving faster than the other, it may be that the aircraft will reach the DME or radial first rather than simultaneously. Keep the following in mind when trying to hit a point:

i. **DME Rate of Change**

(a) When the needle is closer to the heading index than the 90º benchmark, i.e., above the 45º benchmark, the DME will change faster than the radials. The opposite is true when the needle is nearer the 90º benchmark, i.e., when the needle is below the 45º benchmark.

(b) Remember, when the head of the needle is above the 90º benchmark, the DME will get smaller. When the head of the needle is below the 90º benchmark, the DME will get larger. The only exception to these rules is in the case of strong winds aloft.

(c) To get your DME to "speed up," turn to place the needle closer to the heading index. This will slow the rate at which you are crossing radials. When going inbound, you will be working the head of the needle. When going outbound, you will be working the tail.

ii. **Radial Rate of Change**

(a) To cross radials faster, turn to place the needle closer to the 90º benchmark. Simultaneously, the rate that the DME is changing will slow.

(b) You will not necessarily be able to determine the exact heading to roll out on as you are adjusting heading, but that is not as important as altering your heading before it is too late. Once on your new heading, let things settle down (e.g., cross a few radials; let a few tenths of DME pass) then update again by trying to determine if you will hit the radial or DME first. Remember your goal of getting as close as you can to the point. Continually update until crossing the point.

k. In the event your solution does not work out exactly, you may arrive either at your desired DME or radial prior to the fix. If arriving at the DME first and you are **within 30 radials** of the desired radial, turn to arc toward the fix. If arriving at the radial first, turn to track inbound/outbound to the fix.

3. **Common Errors**

a. Failing to expedite the first six steps. Remember, there is plenty of time to refine your solution once proceeding in the general direction.

b. Reversing the direction of the imaginary no–wind heading line by extending the imaginary line from the fix through the present position.

c. Failing to make frequent updates. As you get closer to the station more frequent updates will be required to ensure an accurate solution.

d. Placing the wrong fix at the outer edge of the RMI card.

e. Proceeding to the reciprocal of the radial/DME instead of the radial/DME.

f. Attempting to arc to the fix when not within 30 radials of the desired fix.

g. Failing to make timely and accurate wind drift corrections enroute to the fix.

621. TACAN ARCING

Reference: NIFM Part V, "TACAN Procedures."

1. **Amplification** – Arcing is defined as flying at a constant distance from a TACAN or VOR/DME station by reference to DME. Arcing around a station may be required to comply with an ATC clearance and is an integral part of certain TACAN or VOR/DME approaches and DPs. Arcing may also be employed as a corrective measure during point–to–point maneuvers, if you miss your destination point.

In practice, you do not actually fly a "perfect arc," but by varying AOB and heading, a close approximation of an arc can be achieved.

2. **Procedure**

a. Continue on the desired radial to the DME that identifies the lead point. When turning onto an arc from a radial (using a Standard–Rate Turn), the amount of lead (in nautical miles) should be 0.5% of the aircraft's groundspeed.

RADIUS OF TURN

When an aircraft commences a turn, it turns about an imaginary point. The distance from the aircraft to this point is referred to as radius of turn. Radius of turn is determined by turn rate and airspeed. In Figure 6-36 (inset), an aircraft has been flying a 90º heading and turns to 360º (or a 90º turn onto an arc). Position "a" represents the point where the turn was started and position "b" is the point where 360º is reached. As you can see, some eastward travel occurred between the start of the turn and rollout. For a 90º turn, this distance equals the radius of turn. For a Standard–Rate Turn at 150 knots, this distance is .8 NM and at 120 knots it is .6 NM.

NOTES

1. .8 NM and .6 NM are actually approximations. The actual value is .5% of your GROUNDSPEED. In most applications, the amount of error introduced by using these approximations is negligible. However, excessive headwinds or tailwinds may require adjusting the leadpoint to turn onto the arc.

2. The values of .8 and .6 NM will be less accurate if you are sloppy rolling into and out of turns or if you fail to maintain a Standard–Rate Turn.

For example, if you are inbound to the station at 150 knots and are instructed to arc at 10 DME, you would begin the turn onto the arc at 10.8 DME. If you are outbound from the station and desire to arc at 10 DME, your lead point would be 9.2 DME.

b. Determine the direction of turn at the leadpoint.

c. At the leadpoint, start a turn in the appropriate direction. Continue the turn until the head of the TACAN needle is on the 90º benchmark.

d. Check your DME.

i. **<u>If DME is less</u>** than desired, you are inside the arc. To correct back to the arc, simply maintain the heading. If you have flown excessively inside the arc, (.5 DME or more inside the arc), make a turn to place the head of the TACAN

needle 15º below the 90º benchmark to return the aircraft back to the arc. Approaching the arc, lead the turn onto the arc and resume Arcing Procedures.

ii. **If DME is greater** than desired, you are outside the arc. To correct, turn to place the head of the TACAN needle 15º above the 90º benchmark.

e. Once established on the arc in a no–wind situation, remain on the arc by altering aircraft heading and/or bank angle to maintain the head of the TACAN needle on or near the 90º benchmark.

NOTE

When altering aircraft heading, consider the position of the head of the TACAN needle relative to the 90º benchmark. In a no–wind situation:

Head of the needle on the 90º benchmark	DME constant
Head of the needle below the 90º benchmark	DME increases
Head of the needle above the 90º benchmark	DME decreases

f. When arcing, crosswinds may cause the aircraft to drift off of the arc.

i. **If drifting off the arc,** – Turn to place the head of the needle above or below the 90º benchmark, as required. A correction of 10 to 30 degrees will normally suffice. Once reestablished on the arc, continue Arcing Procedures, but maintain a drift correction, just as you do when tracking a radial. If the drift correction is insufficient, repeat the procedure and apply a more appropriate drift correction.

NOTE

The rate of deviation from, or correction to, an arc will vary with the size of the arc, distance from the NAVAID, TAS, wind direction, and velocity.

EXAMPLE: Figure 6–35 illustrates a typical arcing situation. The aircraft is inbound to the TACAN station at 150 knots groundspeed, flying a course of 90º (inbound on the 270º radial). You are instructed to arc north at 10 NM.

ii. At Point "a" the aircraft is at the leadpoint. Start the turn to intercept the arc now.

iii. At Point "b" you have just intercepted the arc. The head of the TACAN needle is on the 90º benchmark and the DME is showing 10.

iv. At Point "c" you have drifted inside of the arc possibly due to winds, poor arcing technique, or poor BAW. To correct, refer to para (f)(i) above.

v. At Point "d" you have drifted outside the arc. To correct, refer to para (f)(i) above.

vi. At Point "e" you are reestablished on the 10 DME arc.

3. **Common Errors**

a. Not providing adequate lead for turns, thus overshooting the arc.

b. Allowing the head of the needle to fall too far below the 90º benchmark or positioning it too high above the benchmark.

c. Turning in the wrong direction to get back on the arc. Remember the head of the needle points at the station. If you need to get closer to the station, turn toward the head of the needle.

d. Using too great an intercept angle to reestablish the aircraft on the arc.

e. Not placing the head of the needle on the 90º benchmark when initially intercepting the arc.

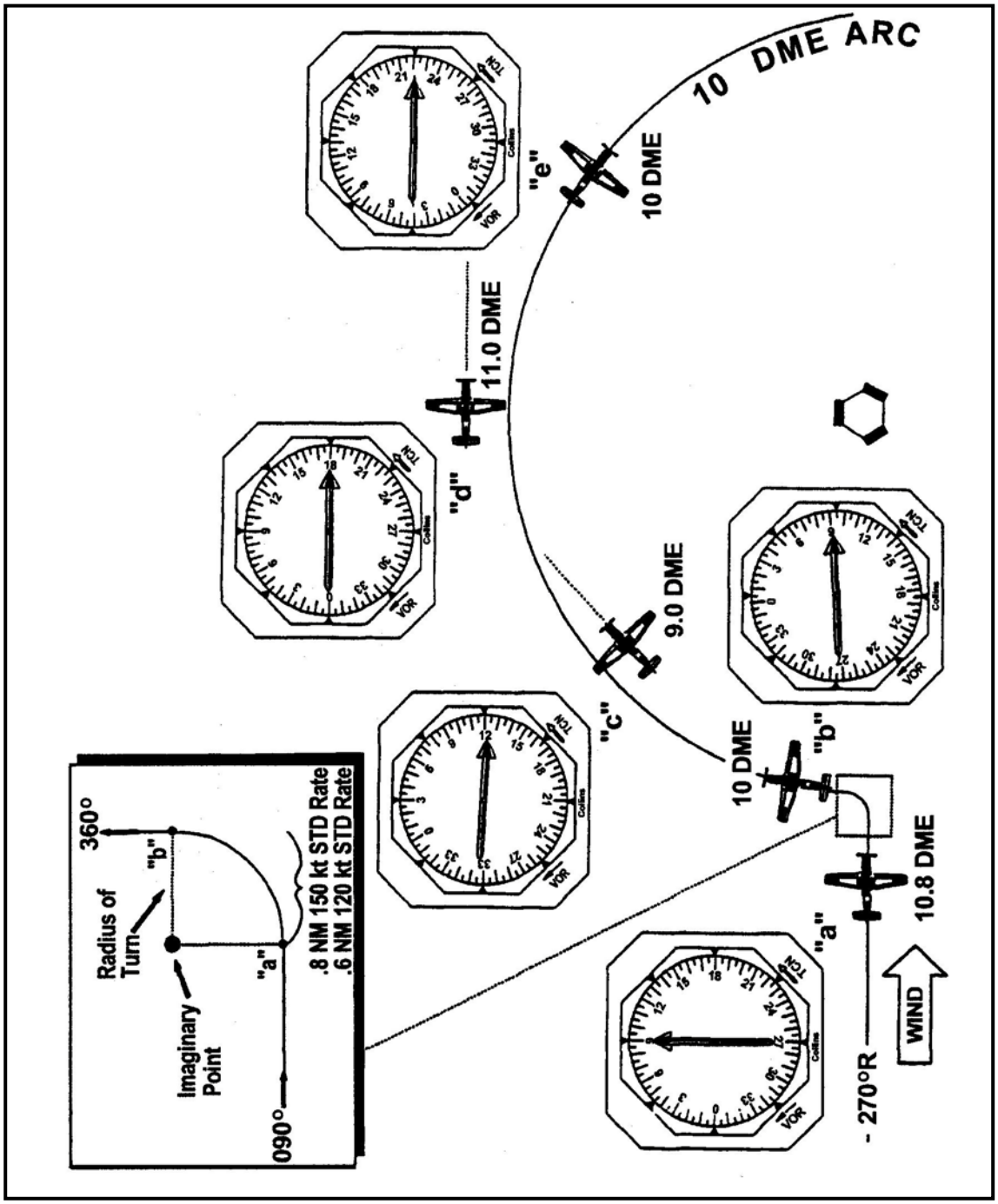

Figure 6–35 TACAN Arcing/Arcing Maneuver

622. INSTRUMENT APPROACH PLATES

1. Each instrument approach plate consists of five sections:

   a. Margin identification

   b. Planview

   c. Profile view

   d. Landing minima section (and notes)

   e. Aerodrome sketch

   Examples of various approaches are:

KPNS	VOR RWY 19	(Figure 6–36)
KCEW	VOR A	(Figure 6–37)
KPRX	VOR or GPS RWY 35	(Figure 6–38)
KNGP	VOR/DME Z or TACAN Z RWY 13R	(Figure 6–39)
KCRP	ILS RWY 13	(Figure 6–40)
KHST	TACAN RWY 5	(Figure 6–41)

2. **Amplification**

   a. **Margin Identification** – The approach name is derived from the type facility providing final approach course guidance. The runway number is included when the final approach course is within 30º of runway centerline, e.g., VOR RWY 19 (Figure 6–36). A sequential letter code is included when the final approach course is more than 30º (circling approach) from the runway centerline, e.g., VOR A (Figure 6–37).

      i. **VOR/DME** in the margin means both VOR and DME receivers and ground equipment are required to execute the final approach. The procedure is not authorized when either VOR or DME is inoperative. TACAN azimuth is not authorized for course guidance.

      ii. **VOR/DME or TACAN** in the margin means the procedure may be executed using VOR or TACAN azimuth for course guidance and DME is required (Figure 6–39).

iii. **ILS or LOC** in the margin. If it is an ILS approach, it is flown using both glideslope and course information and is considered a precision approach. A Localizer approach uses course information only and is considered a non-precision approach (Figure 6–40). If flying the localizer portion of an ILS approach, it will still be referred to as an ILS approach (as listed in the approach plate margin).

iv. **RNAV or GPS** in the margin means the procedure may be executed using Global Positioning Satellite Equipment.

b. **Plan View** – This is a bird's eye view of the approach procedure, including Procedure Turn or another specified initial approach segment, minimum safe altitudes, courses for the final approach segment, obstructions, and navigation and communication frequencies. Data shown within the distance circle (normally 10 NM) is always shown to scale. Dashed circles are used to indicate needed information for the procedure which will not fit to scale within the plan view and include Enroute Facilities (low altitude airways NAVAIDS, fixes, and intersections shown in their relative position around the approach facility) and Feeder Facilities (NAVAIDS, fixes, and intersections used by ATC to funnel aircraft from the enroute structure to the IAF).

NOTE

"ASR" or "PAR" listed below the communications information indicates that Radar approaches and radar vectors to final approach course are available.

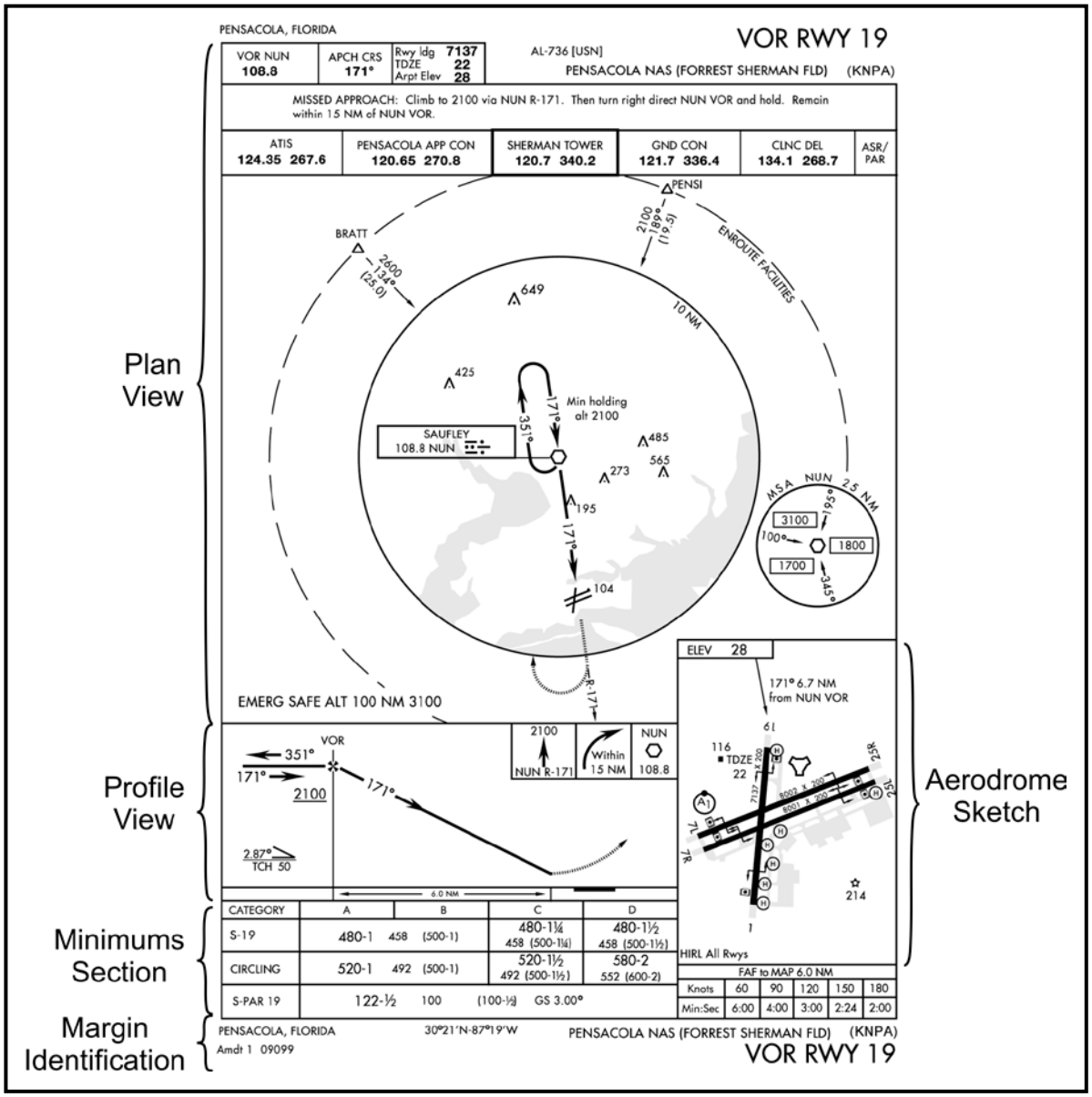

Figure 6–36 VOR RWY 19 (KNPA)

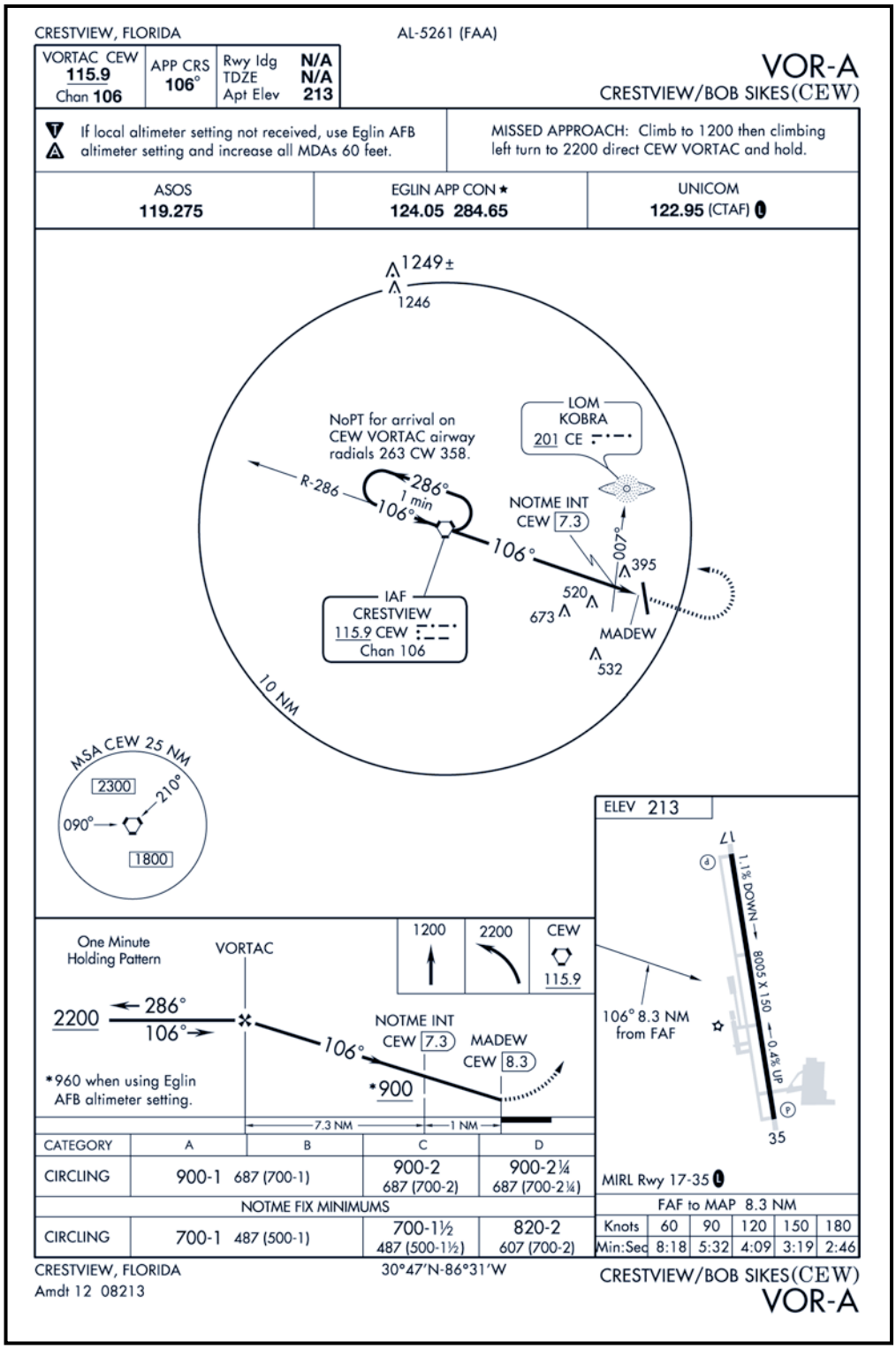

Figure 6–37 VOR-A

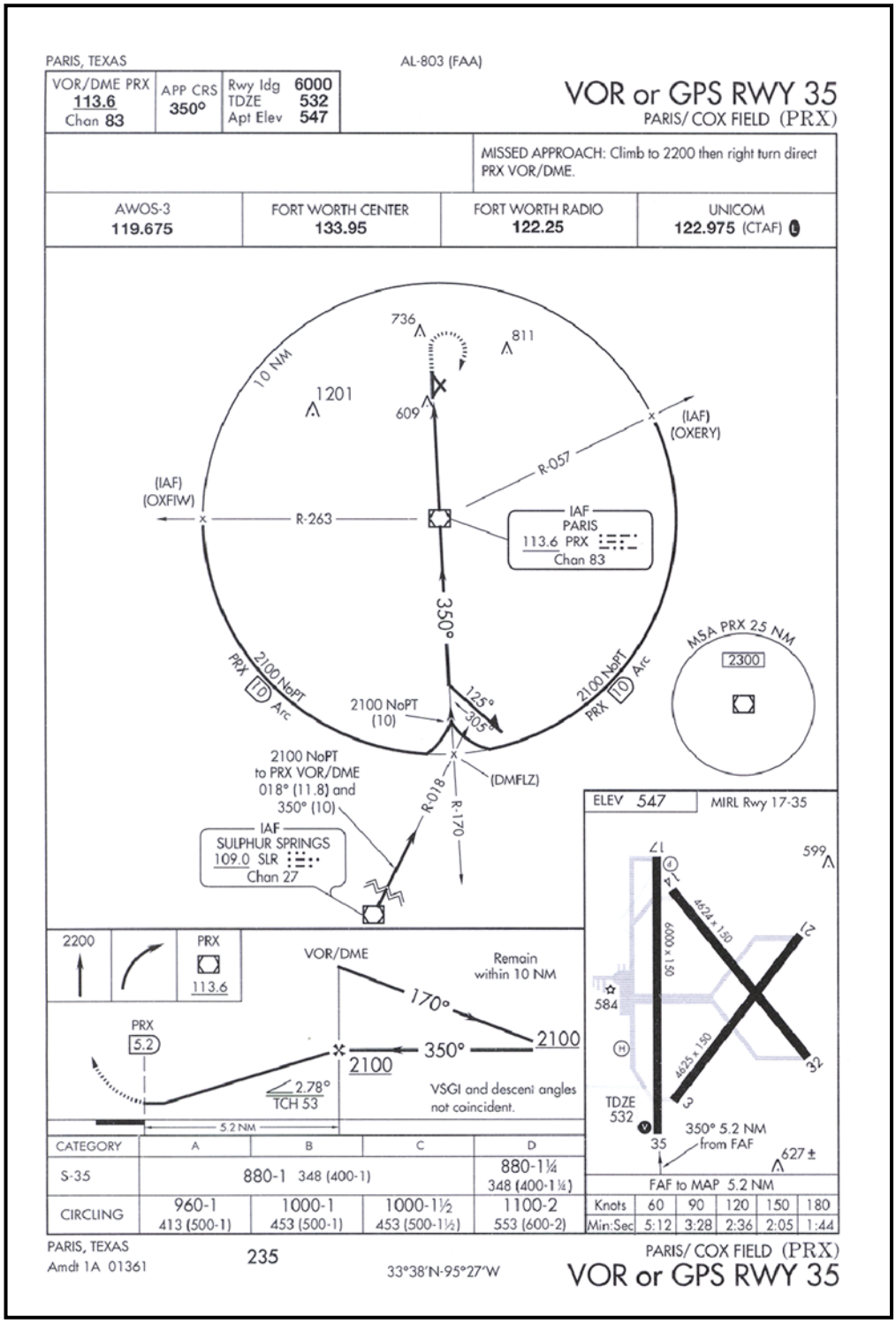

Figure 6–38 VOR or GPS RWY 35 (PRX)

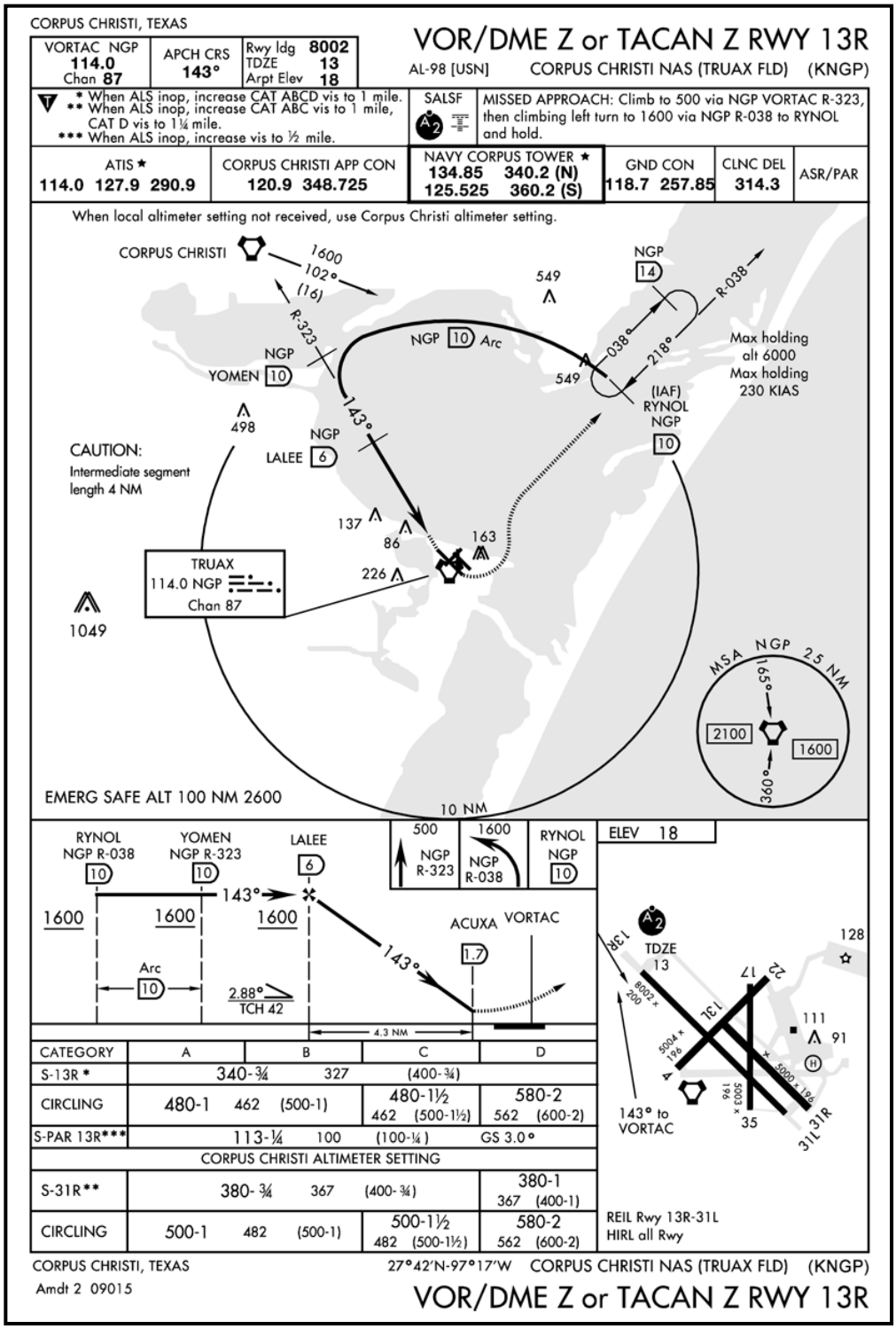

Figure 6–39 VOR/DME Z or TACAN Z RWY 13R (KNGP)

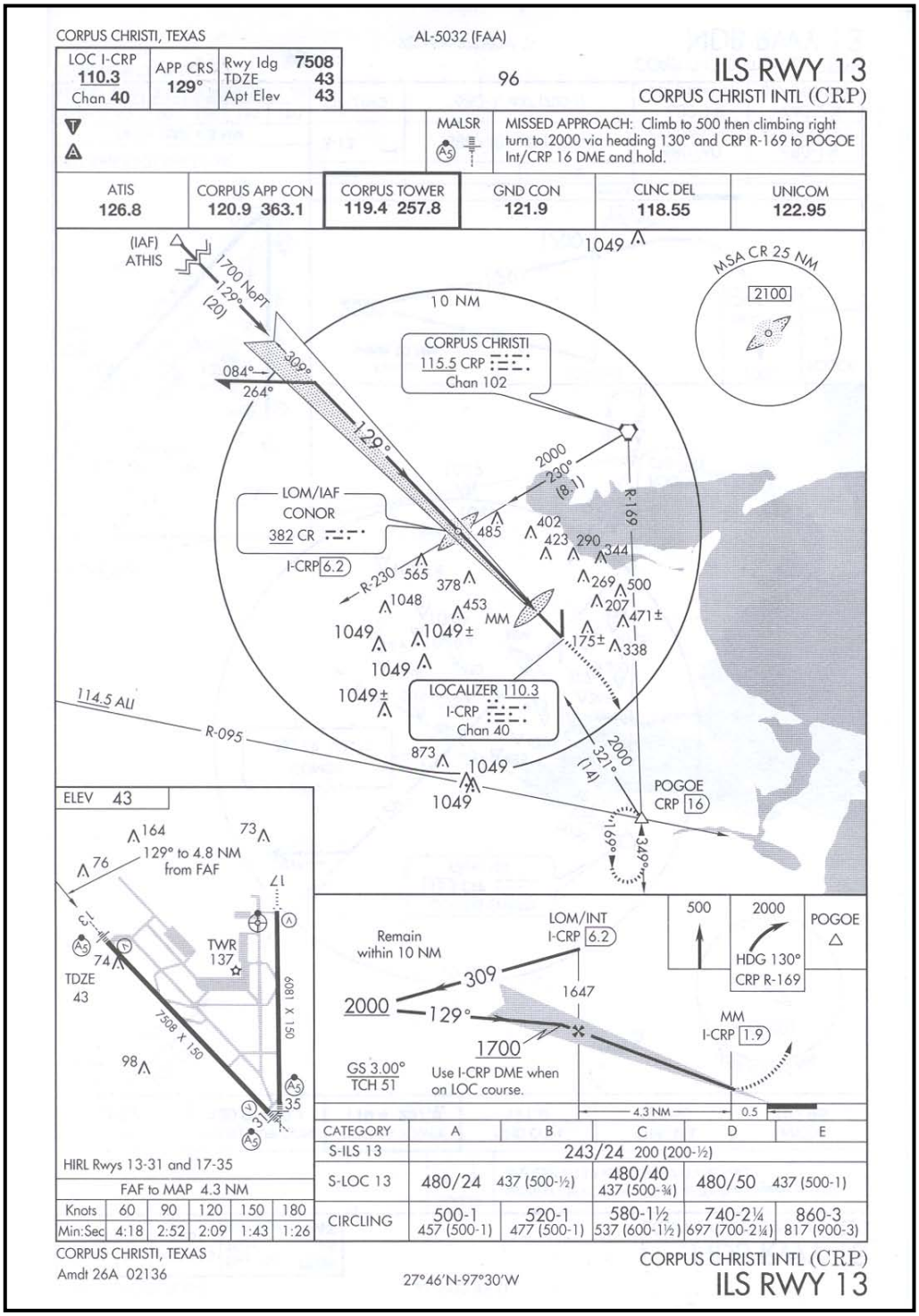

Figure 6–40 ILS RWY 13 (CRP)

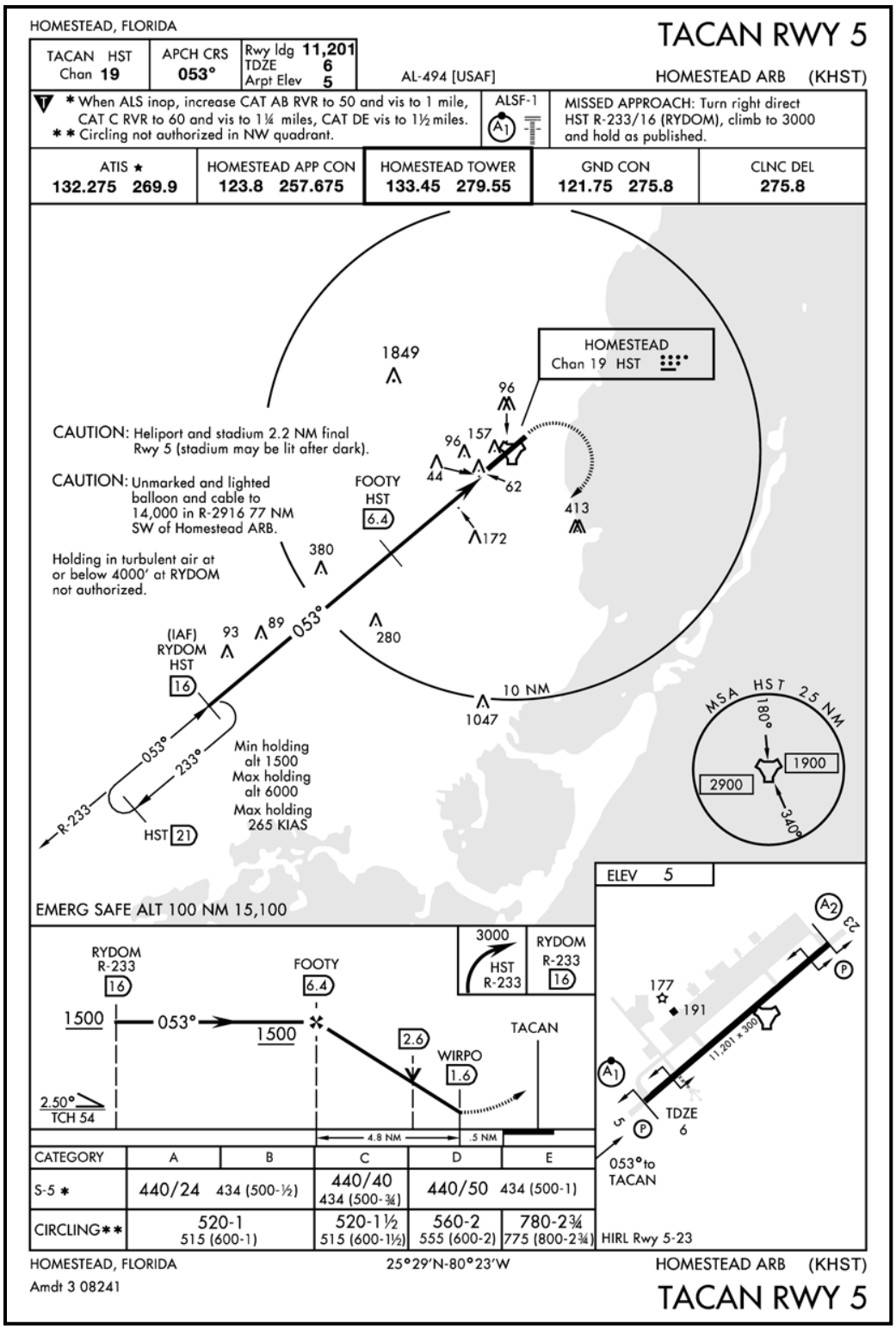

Figure 6–41 TACAN RWY 5 (KHST)

NOTE

The plan view may also specify equipment required to fly the approach, i.e., ADF OR RADAR REQUIRED. This may be for IAF or FAF identification, but not used for final approach course guidance so it is not listed in the margin.

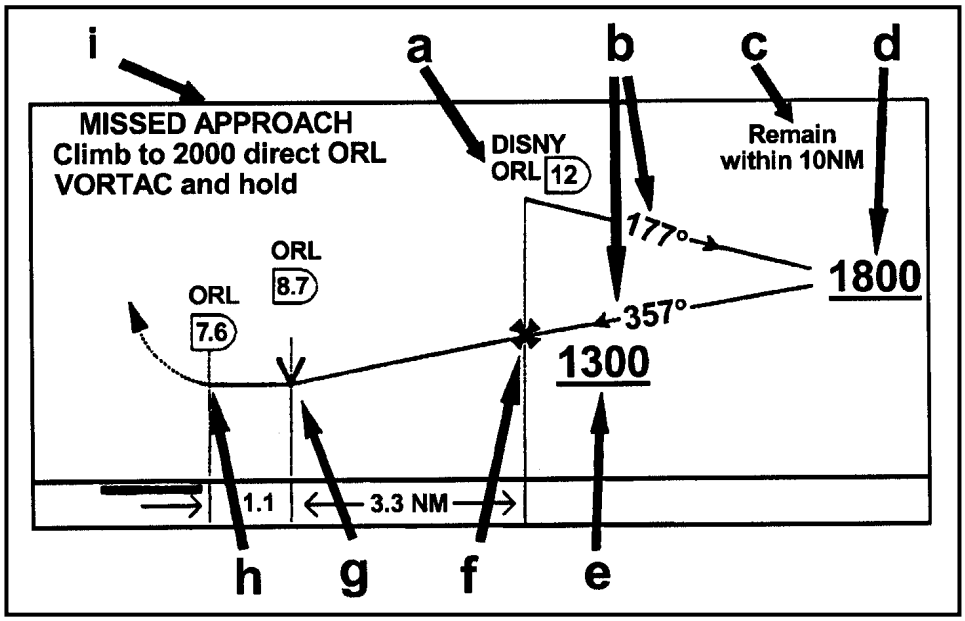

Figure 6–42 Profile View

c. **Profile View** – shows a side view of approach procedures (Figure 6–42). The profile view contains:

i. (a) IAF (altitude not specified for all approaches).

ii. (b) Course information.

iii. (c) Procedure Turn maneuvering area; Procedure Turn must be completed within this distance.

iv. (d) Procedure Turn altitude.

v. (e) FAF altitude.

vi. (f) FAF symbol; denotes location of FAF.

vii. (g) Visual Descent Point (VDP); if used.

viii. (h) Missed Approach Point (MAP).

ix. (i) Missed Approach Procedures.

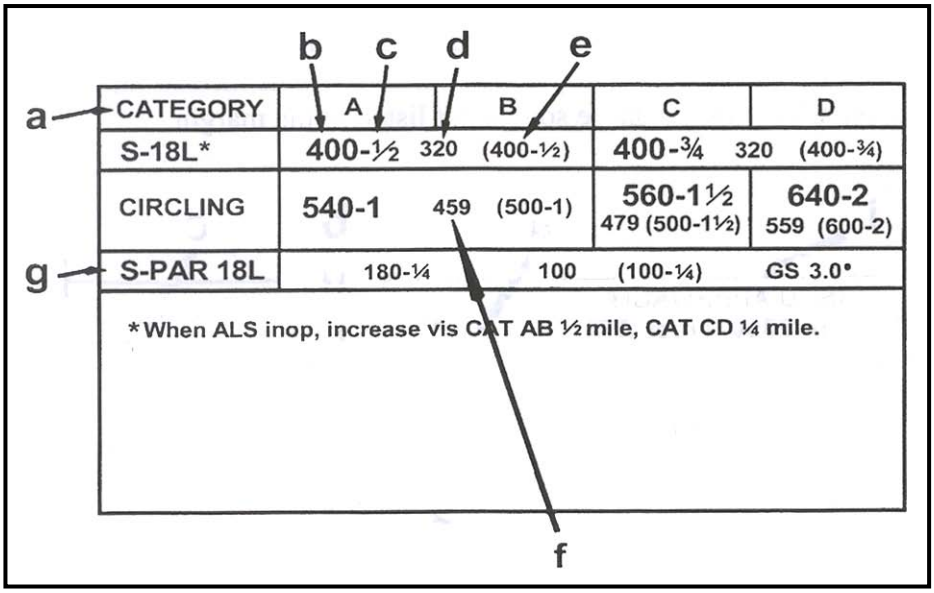

Figure 6–43 IFR Landing Minima

d. **Minima section** – (Figure 6–43) is located below the profile view.

i. (a) Aircraft Approach Category.

ii. (b) Minimum Descent Altitude (MDA); expressed as an MSL altitude. Descent below this altitude is unauthorized until the runway environment is in sight and the aircraft is in a position to maneuver safely to a landing.

iii. (c) Visibility required for the approach in statute miles. RVR in hundreds of feet may be used in place of visibility for Straight–in approaches only.

iv (d) Height Above Touchdown (HAT); height of MDA (or DH) above highest elevation in touchdown zone (used with straight–in mins).

v. (e) Ceiling – visibility; used for filing purposes and commencing an approach.

vi. (f) Height Above Airport (HAA); height of MDA above published airport elevation (used for circling mins).

vii. (g) PAR or ASR minimums; if applicable.

NOTES

1. In the landing minima section, large type altitudes (b) are MSL and small type (d, e, etc.) are AGL.

2. Hat is associated with Straight–in approaches. HAA is associated with Circling approaches. MDA is associated with Non-precision (no glideslope) approaches.

AIRCRAFT APPROACH CATEGORY

Aircraft Approach Category – a grouping of aircraft based on an approach speed of 1.3 times the stall speed in the landing configuration at maximum gross weight. Each category provides 300 feet of obstacle clearance at MDA within the circling radius.

NOTE

For all approaches you can always go up a category (such as up to "C, D, or E"), but never down a category (down to "A")

Circling Approach Area

Aircraft Category	Obstruction Clearance Radius	Approach Speed (KIAS)
A	1.3 NM	< 91
B	1.5 NM	91 to < 121
C	1.7 NM	121 to < 141
D	2.3 NM	141 to < 166
E	4.5 NM	>166 See FAR Part 97

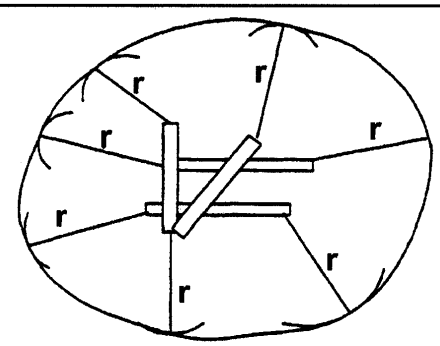

Radius (r) defines the size of the area.
(Varies with the approach category)

Figure 6–44 Circling Approach Area

NOTE

The T–34C is an Approach Category B aircraft based on approach speeds of 100 knots (FAC on a PAR final) or 120 knots (BAC).

e. **Aerodrome Sketch** (Figure 6–45) is provided on each approach plate in the bottom right–hand or left–hand corner. It shows the runways, taxiways, control tower, vertical obstructions, and the field elevation. All elevations are in feet above Mean Sea Level (MSL). It may include other information such as approach lighting, etc.

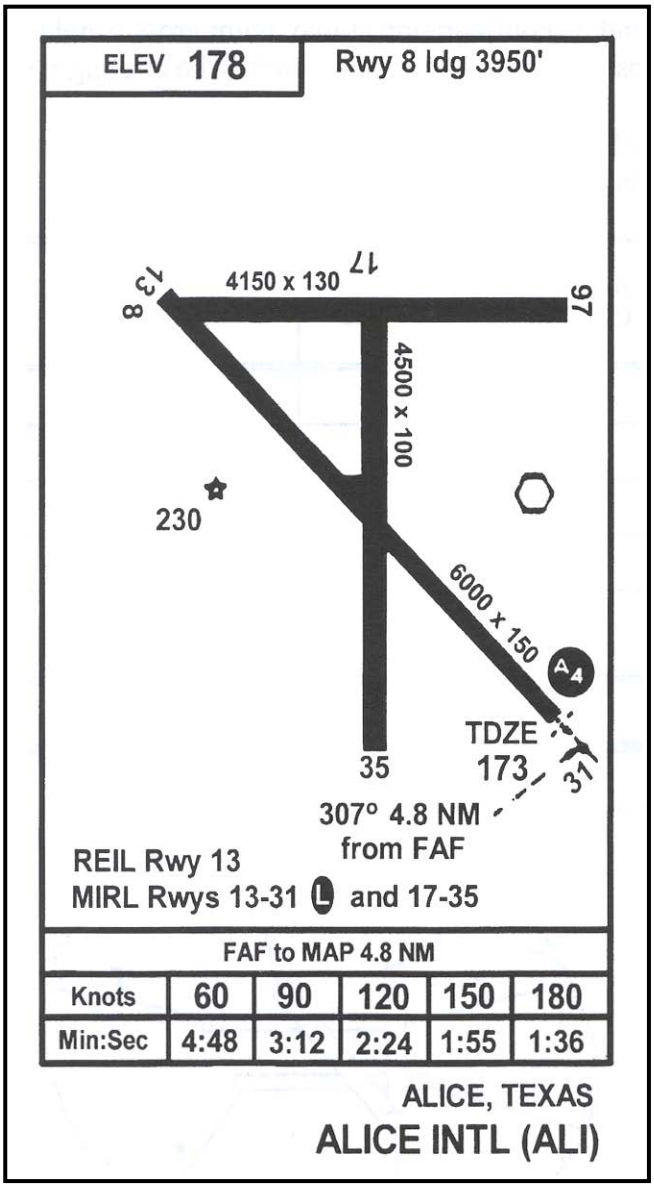

Figure 6–45 Aerodrome Data Box

Note the timing "FAF to MAP" information at the bottom of the aerodrome sketch. This table is used to determine the time to the MAP from the FAF at various ground speeds. The pilot must estimate ground speed. Example: With an approach speed of 120 knots and 15 knots of headwind, groundspeed becomes 105 knots, with timing of 2:48 (Figure 6–45). Timing should always be used, when available, as a back up on DME approaches in case the DME should fail.

3. **New Approach Plate** diagrams are replacing the existing plates (Figure 6–47). The organization of the plates are basically the same. Missed Approach Procedures have moved to the top left–hand side and a diagram has replaced the text in the profile view. The NAVAID and radio frequencies and other pertinent information are labeled in blocks at the top to help the pilot quickly locate them. Eventually all approach plates will be in this format.

4. The FAA is developing Vertical Descent Angle (VDA) on non precision approaches that will give a constant rate of descent from the Final Approach Fix. The purpose of a constant rate descent is to have a stabilized approach, and prevent getting low early. See glossary, Appendix E, for the definition of VDA.

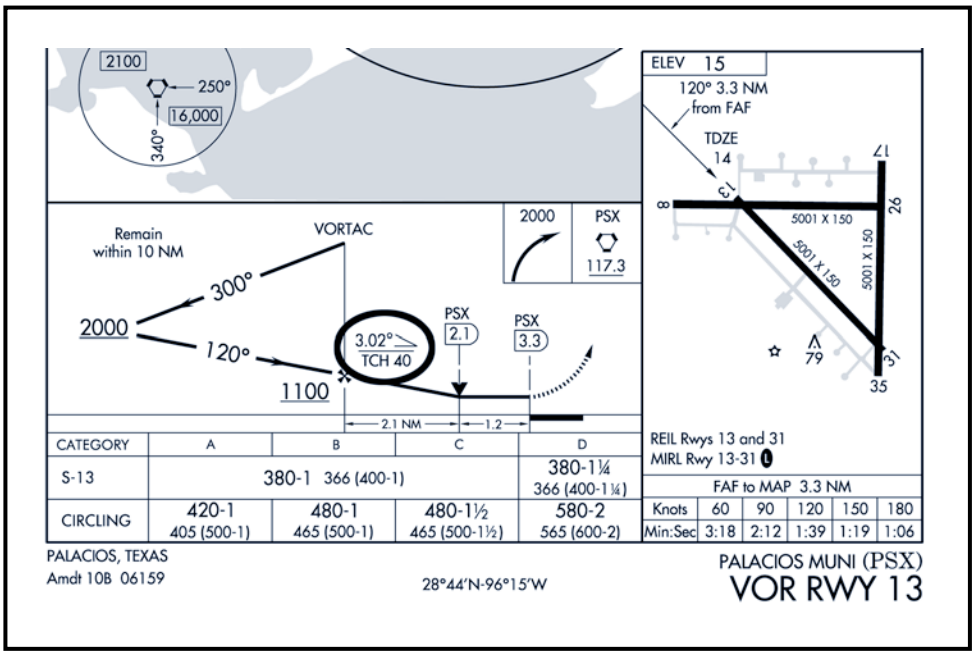

Figure 6–46 Vertical Descent Angle

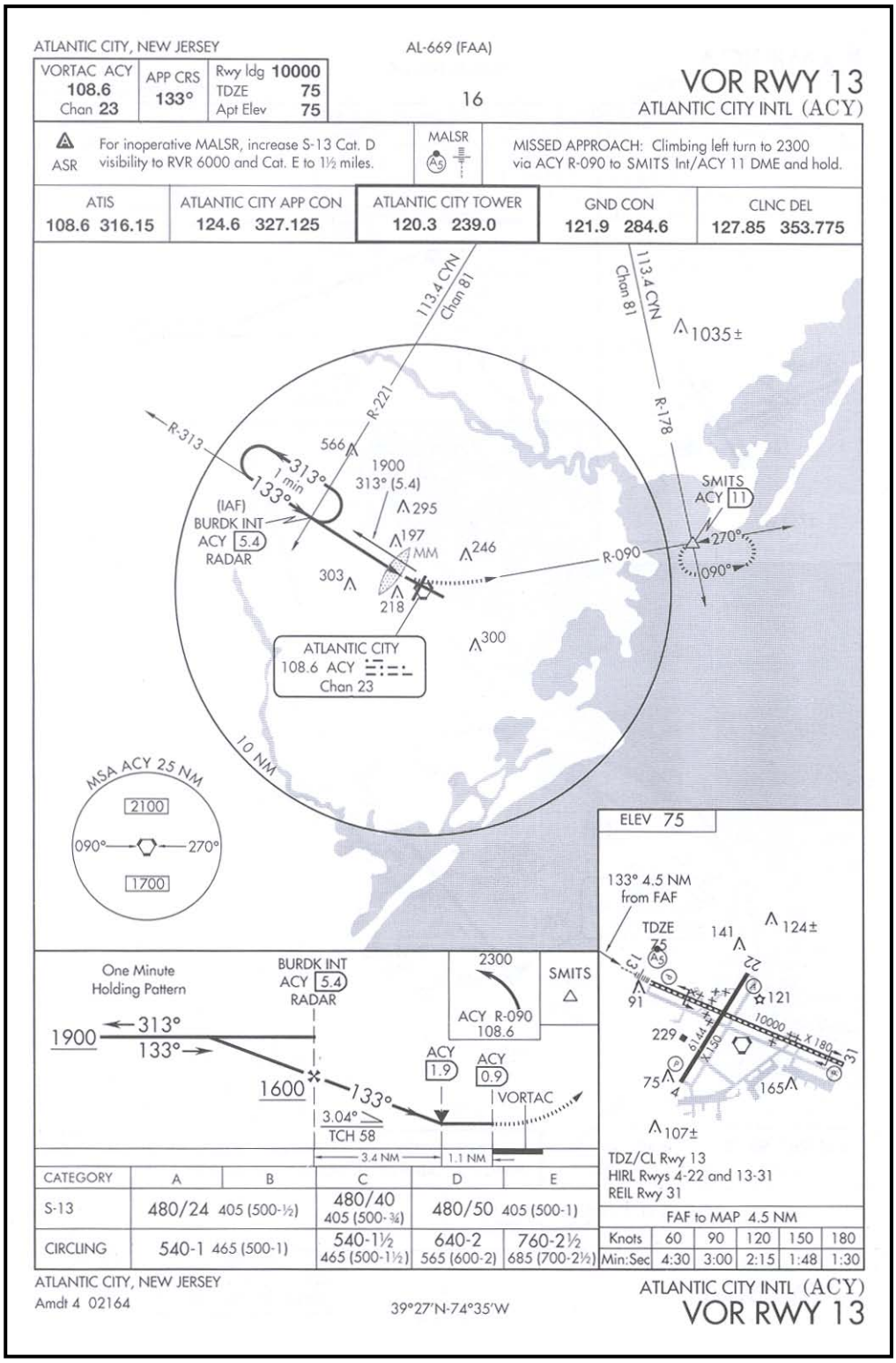

Figure 6–47 New Approach Plate Format

623. LOW ALTITUDE INSTRUMENT APPROACH

Reference: AIM Chapter 5, NIFM Part VI, "Instrument Approaches," and T–34C NATOPS Part VI, Chapter 17, "Instrument Flight Procedures."

1. **Amplification** – An instrument approach enables an aircraft to transition from instrument flight conditions to a visual landing while providing terrain clearance and separation from other aircraft. There are a number of Low Altitude Instrument Approach Procedures that may be executed with the navigation equipment in the T–34C to transition from the enroute environment to final approach for landing. These include Procedure Turn, Teardrop, Holding Pattern in lieu of Procedure Turn, Straight–In, and Arc and Radial combination approaches (sometimes referred to as Procedure Tracks) that use VOR, DME, TACAN, or a combination thereof to complete the approach. Radar vectors to final approach course is an additional procedure that may be applied to any of the above approaches. These approaches use different methods to provide the same result — to position the aircraft safely on final approach.

2. **Procedure** (Common to all approaches)

a. Familiarize yourself with the destination Instrument Approach Procedures prior to departure. (See Appendix B for recommended approach plate review technique.) Ensure they are compatible with aircraft navigational aids. Check forecast weather conditions against weather minimums listed on the approach plate and choose a suitable alternate.

b. Enroute, review the Approach Procedures again. Update weather and obtain clearance for the desired approach. The T–34C is considered a single–piloted aircraft. Therefore, you may not commence an instrument approach if either ceiling or visibility is reported to be below minimums. In this case, you must request clearance to your alternate, or clearance for an approach with acceptable weather minimums.

c. Once cleared for the approach, fly the groundtrack as depicted and comply with all altitude restrictions.

NOTE

When cleared for an approach prior to the IAF, do not descend below last assigned altitude unless:

i. A new altitude is assigned by ATC.

ii. The aircraft is established on a published route.

For example: If operating on an airway, i.e., V–198 inbound to CEW at 5000 (see Figure 6–48), and cleared for the CEW VOR–A approach, a descent to the MEA (3000) or IAF altitude (2200) whichever is higher, could be initiated prior to the IAF.

If proceeding direct to CEW at 5000, off airways (see Figure 6–49), and cleared for the VOR–A approach, 5000 must be maintained until crossing the Crestview VOR.

d. If **no FAF is depicted** on the approach, then maintain the aircraft on the inbound course to the station and descend to the MDA or any step down altitudes that may be depicted.

e. If a **FAF is depicted**, then maintain the aircraft on the inbound course to the station at the minimum altitude depicted. This will be the FAF altitude.

f. Once established on course or with a shallow intercept transition to BAC (a shallow intercept is defined as aircraft heading within 30º of the final approach course).

Transition to BAC as follows:

i. From **Normal Cruise**: Reduce power to 450 ft-lbs, Gear Down, descend at 450 ft-lbs if required. If remaining level, set power to 600 ft-lbs.

ii. From **Slow Cruise**: Power remains at 450 ft-lbs, Gear Down, descend at 450 ft-lbs if required. If remaining level, set power to 600 ft-lbs.

g. At the FAF perform the following procedures (6 Ts):

i. **TIME** – Start the clock's sweep second hand.

ii. **TURN** – To parallel the final approach course.

iii. **TIME** – Second timing not required.

iv. **TRANSITION** – Begin descent to the MDA when established on course and comply with any published altitude restrictions.

On final, descend at 120 knots with 450 ft–lbs torque. In the case of shorter distances from the FAF to the MAP, it may be necessary to reduce power to 300 ft–lbs torque in order to get to the MDA in a timely manner.

NOTES

1. On a non-precision approach, you want to reach your minimum descent altitude prior to reaching your MAP. This enables you to acquire the runway environment sooner to allow an easier transition to land.

2. Some approaches have progressively lower step-down altitudes; you must comply with all altitude restrictions on the approach in order to ensure obstacle clearance.

3. Be sure you are using the correct minimums for the runway in use.

v. **TWIST** – The final approach course in the IND–350. Intercept and track the final approach course.

vi. **TALK** – Give the voice report if required.

h. One hundred feet prior to the MDA add power smoothly towards 650–700 ft–lbs as you raise the nose to the level flight attitude.

i. Maintain 120 knots and MDA on the final approach course.

j. At the MAP, if the runway environment is not in sight or the aircraft is not in a position to make a safe landing, execute the Missed Approach.

3. **Common Errors**

a. Descending below published minimum altitudes.

b. Confusing the inbound and outbound courses and twisting in the wrong course.

c. Accomplishing the 6Ts out of order.

d. Flying the approach when weather is below minimums.

e. Making radio calls at the expense of flying the aircraft safely.

f. Failing to establish an intercept heading to the course during the "twist" step.

g. Failure to start timing on the first "T" of the 6 Ts at the FAF if timing is required.

h. Making large corrections when close to the NAVAID.

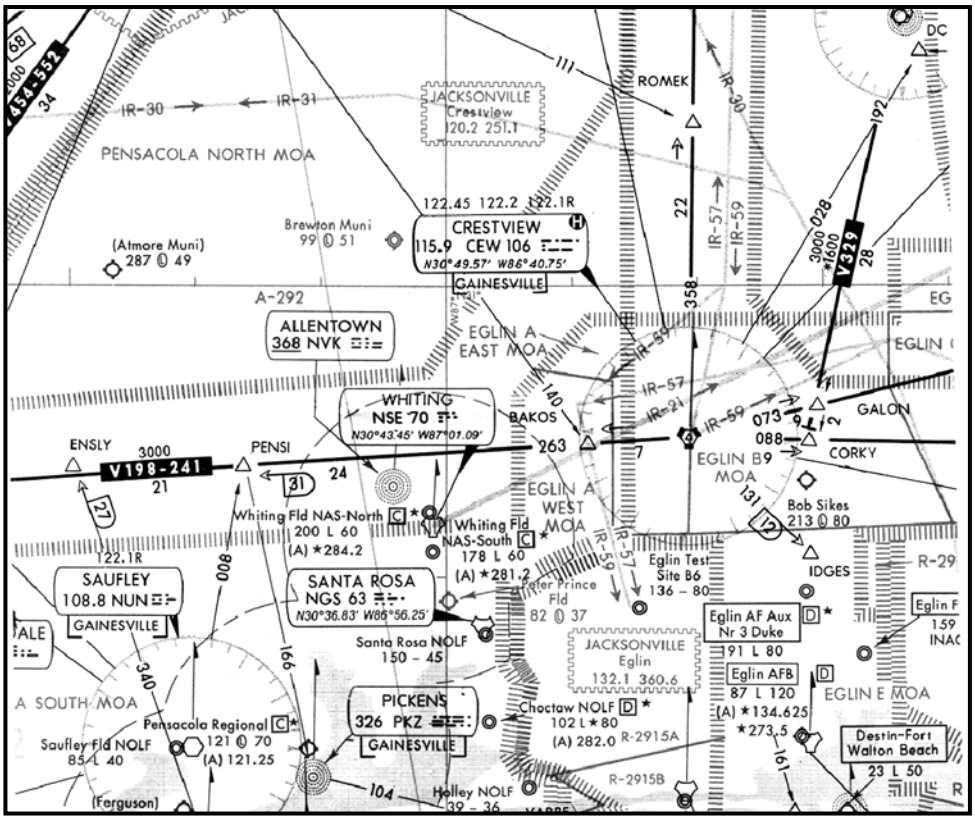

Figure 6–48 L-17/18

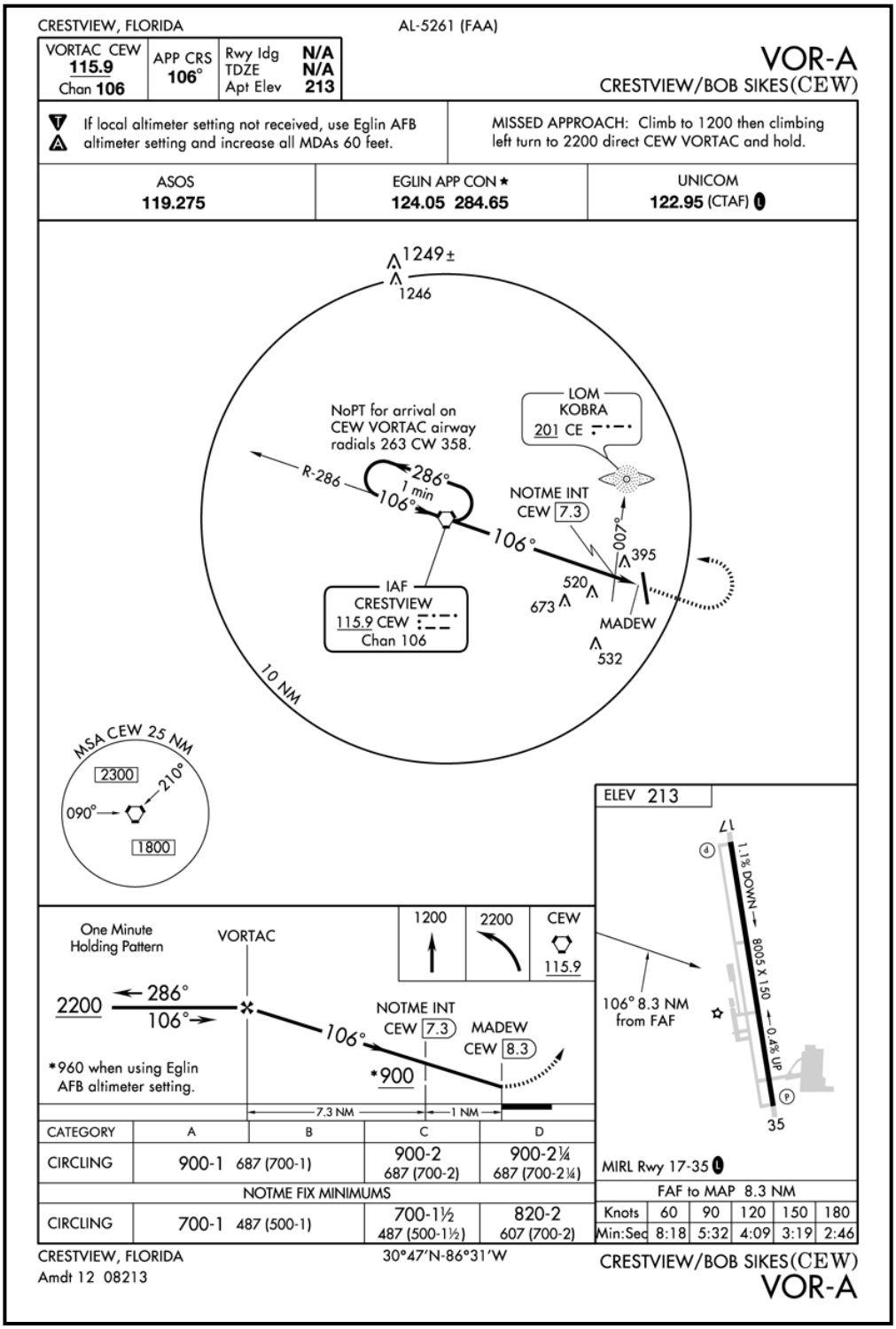

Figure 6–49 VOR–A (CEW)

624. TEARDROP APPROACH

Reference: AIM, Chapter 5; NIFM, Chapter 20.

1. **Amplification** – A Teardrop approach makes use of an outbound to inbound radial intercept maneuver to reverse course and establish the aircraft inbound on the intermediate and final approach course. Do not exceed the "Remain Within" distance.

2. **Procedure** – The following procedures assume clearance for the ROBINS AFB VOR RWY 15 approach (Figure 6–50) has been received and you are proceeding to the IAF.

a. At the IAF, indicated by station passage, execute the 6 Ts:

i. **TIME** – Not required; time of commencing the approach is not reported to the controlling agency.

ii. **TURN** – Turn in the shortest direction to parallel the outbound course (295º).

iii. **TIME** – Start timing for three minutes outbound when wings level or abeam the station, whichever occurs last.

NOTE

In strong winds or at indicated speeds greater than 120 knots, you may have to adjust outbound timing to comply with any "remain within distance" associated with the approach. Normally, a three minute timing outbound will be sufficient.

iv. **TRANSITION** – Transition to slow cruise. If a descent is necessary at the IAF, then leave the power at 300 ft–lbs, lower the nose, and descend at 120 knots.

NOTE

Comply with any additional altitude restrictions imposed by ATC.

v. **TWIST**

(a) Set the outbound course (295º) in the IND–350.

(b) Use "Over–the–Station Intercept" Procedures to establish the aircraft on course outbound.

(c) Expedite the above procedures so as to establish an intercept heading no later than one minute after the start of outbound timing.

vi **TALK** – give the appropriate voice report if required.

b. **Level off** at Procedure Turn altitude (2000 feet).

i. One hundred feet prior to Procedure Turn altitude, add power smoothly towards 450–500 ft–lbs as you raise the nose to level flight and retrim.

ii. Maintain Procedure Turn altitude until you are established on the inbound course.

c. After 2 ½ minutes of outbound timing, twist the inbound course into the IND–350 (134º).

NOTE

For a non-depicted Teardrop approach, twist an outbound course 20º offset from the published outbound course on the Procedure Turn or "barbed" side.

d. At three minutes of outbound timing, execute a turn in the direction depicted (right). During the last half of the turn, note the position of the head of the needle.

If the head of the needle is not within 5º of the inbound course, stop the turn with a 45º intercept. Do this by placing the inbound course (134º) under the first 45º benchmark in the upper half of the RMI.

If the head of the needle is within 5º of the inbound course, you should roll out with a double–the–angle intercept. If you overshoot the inbound course, continue the turn and establish an intercept.

e. Once established on course or with a shallow intercept, transition to BAC (a shallow intercept is defined as aircraft heading within 30º of the final approach course).

f. As you intercept the inbound course, turn and track inbound.

g. Once established inbound, comply with the remainder of the Low Altitude Instrument Approach Procedures (paragraph 623.)

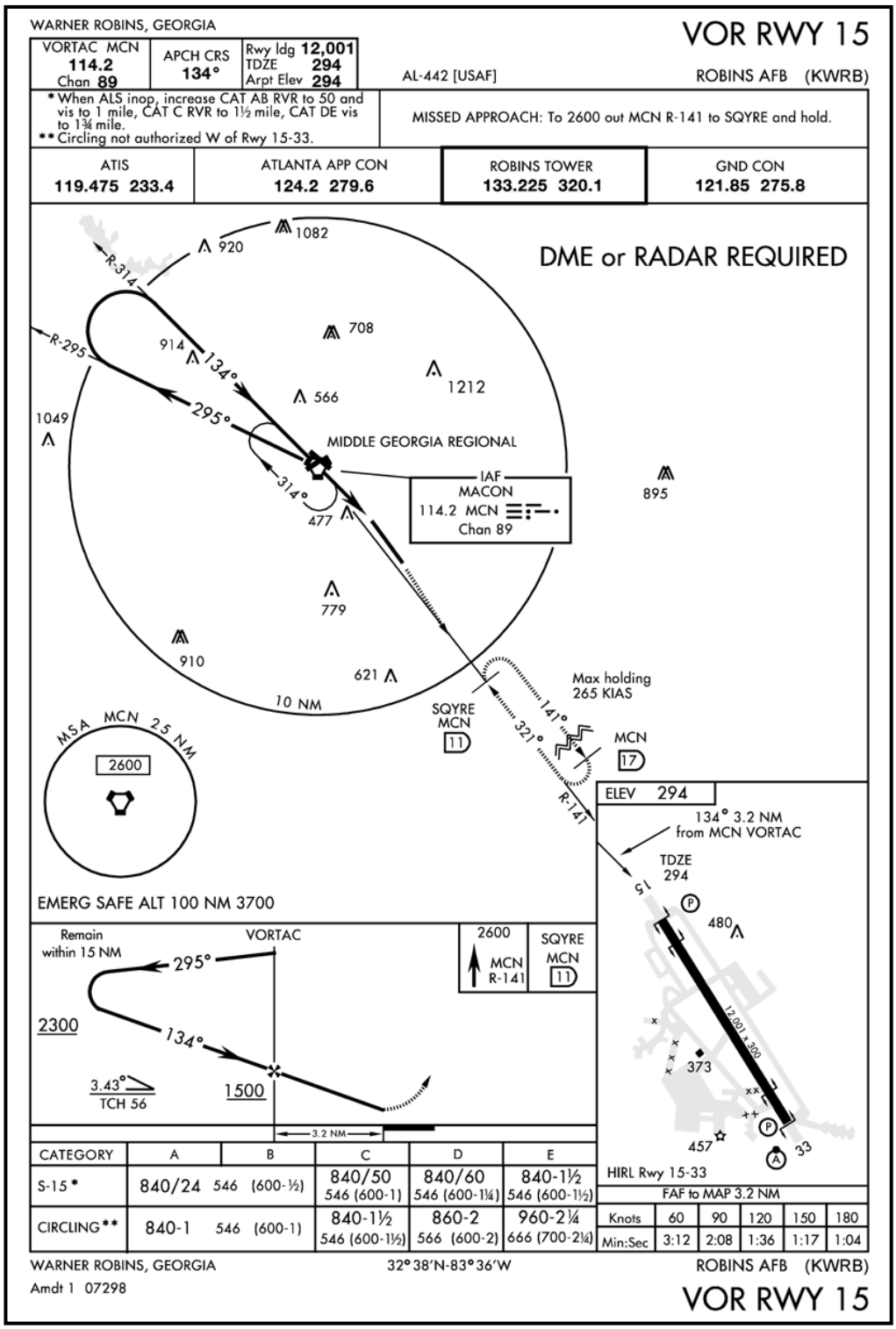

Figure 6–50 VOR RWY 15 (KWRB)

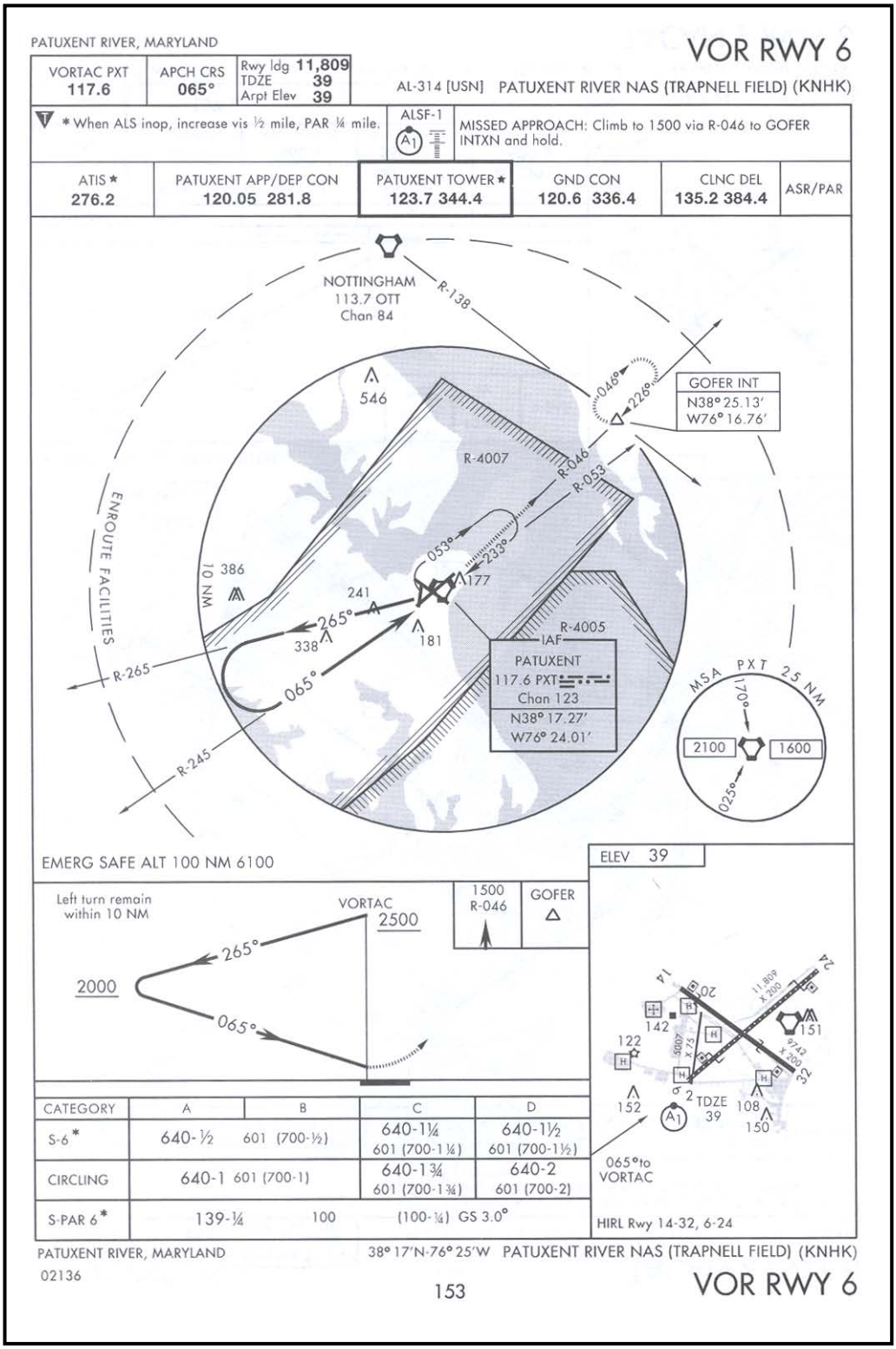

Figure 6–51 VOR RWY 6 (KNHK)

625. PROCEDURE TURN APPROACH

Reference: AIM, Chapter 5; NIFM Chapter 20.

1. **Amplification** – A Procedure Turn approach is an instrument maneuver used to reverse direction to establish an aircraft inbound on the intermediate or final approach course. Procedure Turns are depicted by a "barb" symbol on the approach plates, which indicates on which side of the outbound course to complete the turn (Figure 6–52). Headings are provided to reverse course using a 45/180 degrees type maneuver. However, the point at which the turn may be commenced and the type and rate of turn, are left to the discretion of the pilot as long as the Procedure Turn is executed on the proper side of the outbound course and the "Remain Within" distance (normally 10 NM) is not exceeded. Some of the options are the 45/180 degrees course reversal, the racetrack pattern, or the 80/260 degrees course reversal.

During the RI syllabus, only the 45/180 degrees course reversal will be practiced. Do NOT execute a Procedure Turn when:

a. Radar vectors to the final approach course are provided.

b. A Holding Pattern is specified in lieu of a Procedure Turn (Figure 6–49).

c. Approach can be made from a properly aligned Holding Pattern (Figure 6–56).

d. The procedure specifies "No PT," no Procedure Turn (Figure 6–67).

e. The plan view does not depict a Procedure Turn "barb" symbol.

2. **Procedure** – The following procedures assume clearance for the DAYTONA BEACH INTERNATIONAL VOR or GPS RWY 16 approach (Figure 6–52) has been received and you are proceeding to the IAF.

a. At the IAF, indicated by station passage, execute the 6 Ts:

i. **TIME** – Not required; time of commencing an instrument approach is not reported to the controlling agency.

ii. **TURN** – in the shortest direction to parallel the outbound course (336º).

iii. **TIME** – Start timing for two minutes outbound when wings level or abeam the station, whichever occurs last.

NOTE

In strong winds or at indicated speeds greater than 120 knots, you may have to adjust outbound timing to comply with any "remain within distance" associated with the approach. Normally, two–minute timing outbound will be sufficient

iv. **TRANSITION** – Transition to slow cruise. If a descent is necessary at the IAF, then leave the power at 300 ft–lbs., lower the nose, and descend at 120 knots.

NOTE

Comply with any additional altitude restrictions imposed by ATC.

v. **TWIST**

(a) Set the outbound course (336º) in the IND–350.

(b) Use "Over–the–Station Intercept" Procedures to establish the aircraft on course outbound.

(c) Expedite the above procedures so as to establish an intercept heading no later than one minute after the start of outbound timing.

vi. **TALK** – Give the appropriate voice report if required.

b. **Level off** at Procedure Turn altitude (1600 feet).

i. One hundred feet prior to Procedure Turn altitude, add power smoothly towards 450–500 ft–lbs as you raise the nose to level flight attitude and retrim.

ii. Maintain Procedure Turn altitude until you are established on the inbound course.

c. At the end of outbound timing, execute the 45º/180º course reversal by turning to the heading depicted next to the "barb" symbol (291º). Start the clock as you roll wings level and maintain this heading for one minute. Twist in the inbound course (156º) in the CDI.

d. At the end of one minute timing, execute a 180º turn in a direction opposite the first turn (i.e., turn away from the station). During the last half of the turn, note the position of the head of the needle.

If the head of the needle is not within 5º of the inbound course, stop the turn with a 45º intercept. Do this by placing the inbound course (156º) under the first 45º benchmark in the upper half of the RMI.

If the head of the needle is within 5º of the inbound course, roll out with a double–the–angle intercept.

If you overshoot the inbound course, continue the turn and establish an intercept.

e. As you intercept the inbound course, turn and track inbound.

f. Once established on course or with a shallow intercept transition to BAC (a shallow intercept is defined as aircraft heading within 30º of the final approach course).

g. Once established inbound comply with the remainder of the Low Altitude Instrument Approach Procedures (paragraph 623).

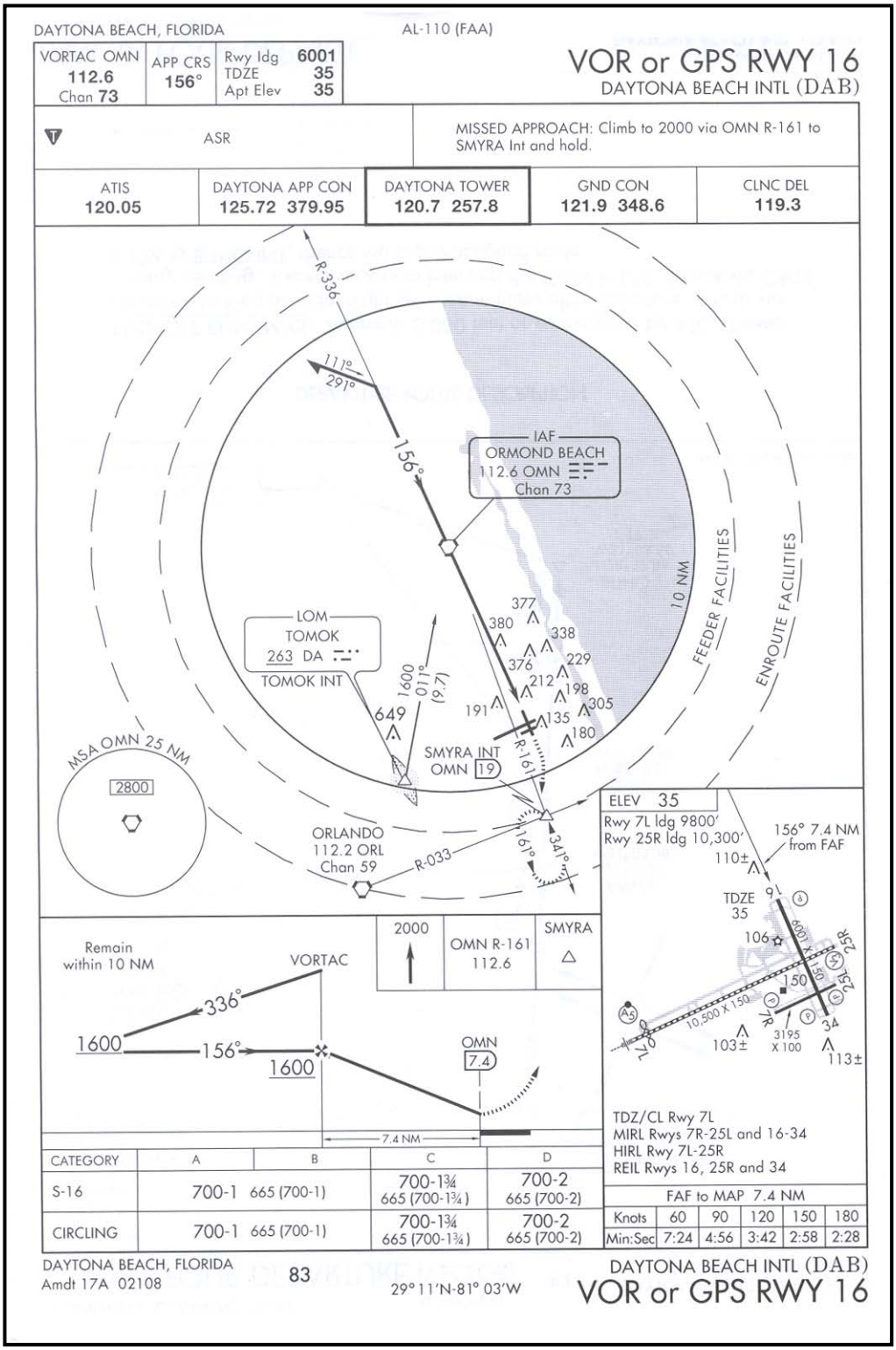

Figure 6–52 VOR or GPS RWY 16 (DAB)

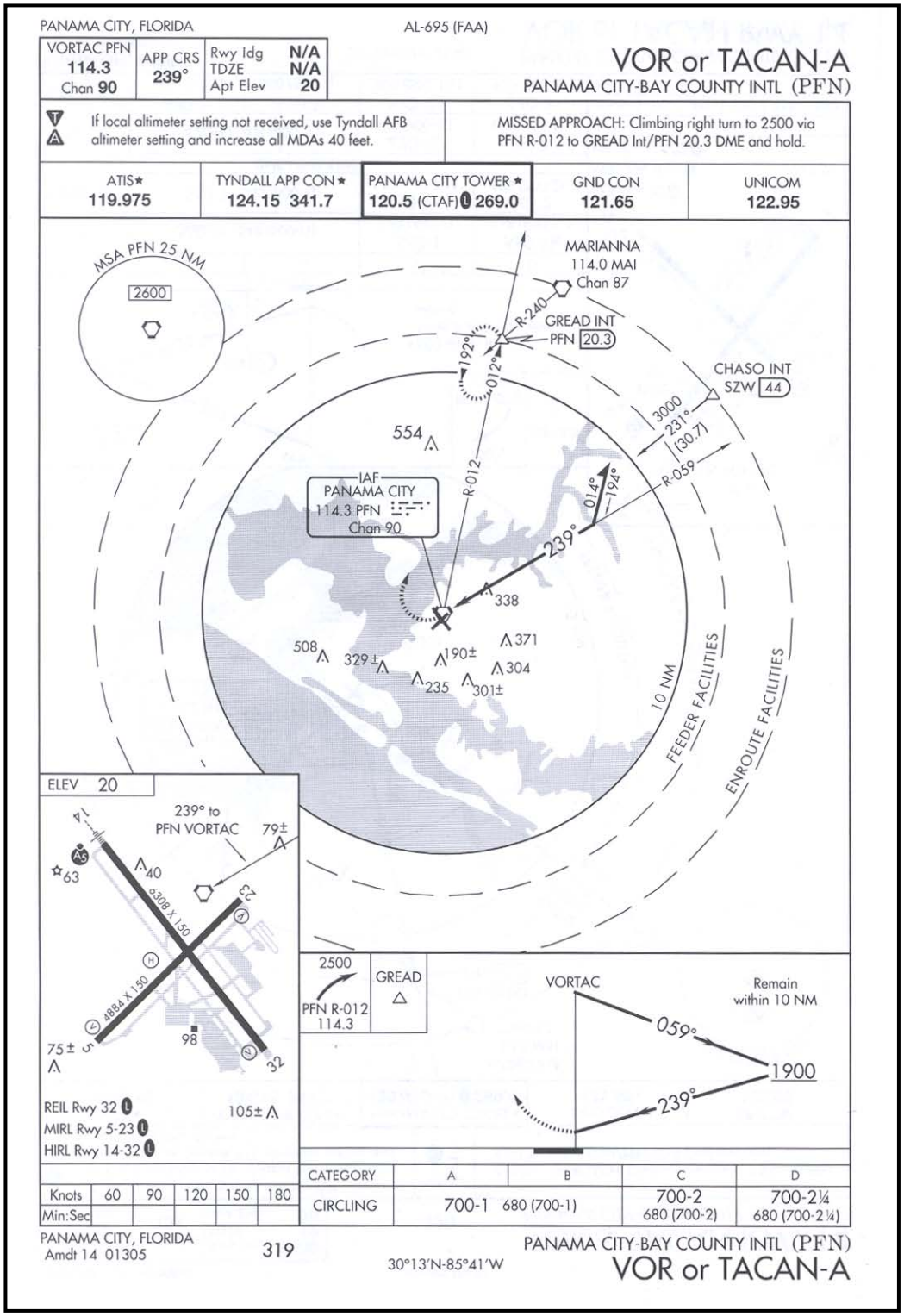

Figure 6–53 VOR or TACAN-A (PFN)

626. HOLDING PATTERN APPROACH

Reference: AIM, Chapter 5; NIFM Chapter 20, "Approaches From Holding."

1. **Amplification** – A Holding Pattern approach uses a published holding pattern to reverse course and establish the aircraft inbound on the intermediate or final approach course. Holding Pattern approaches are printed using a normal holding pattern track with a heavy line indicating "In lieu of Procedure Turn." The entry turn and maneuvering in holding requires normal holding procedures. Only one turn in the Holding Pattern is expected unless more turns are necessary to lose excessive altitude or to become better established on course, in which case ATC must be advised. Descent from the minimum holding altitude may be commenced at the holding fix ("Case I" below and Figure 6–58) or on the inbound leg ("Case II" below and Figure 6–56).

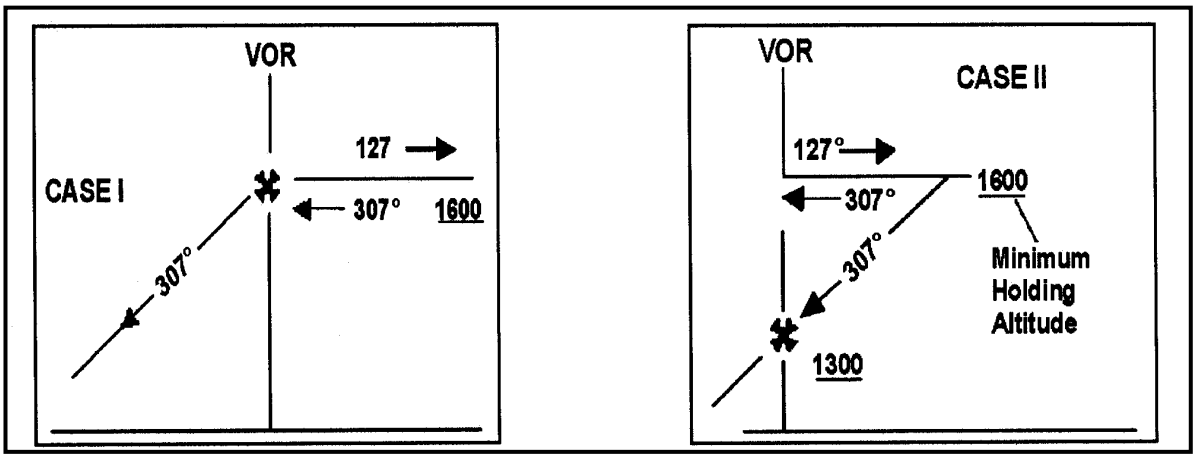

Figure 6-54 Holding Fix Descent

Unlike the Teardrop and Procedure Turn approaches, the Holding Pattern approach will always have a FAF depict on the approach.

NOTES

1. Established in a holding pattern as depicted in Figure 6-36 or 6-56 and subsequently cleared for the approach, do not execute the Procedure Turn. Use Holding Pattern Approach Procedures.

2. Holding as depicted in Figure 6–57 and subsequently cleared for the approach, the Procedure Turn must be executed to allow sufficient time to intercept the final approach course, transition to BAC, and descend to the MDA. If unsure of the correct procedures, request clarification from ATC.

2. **Procedure** – The following procedures assume clearance for the MARIANNA MUNI VOR or GPS–A approach (Figure 6–56) has been received and you are proceeding to the IAF.

a. At the IAF, indicated by station passage, execute the 6 Ts

i. TIME – Not required, since time of commencing the approach is not reported to the controlling agency.

ii. **TURN** – Use normal Holding Pattern entry procedures to determine the entry heading and turn direction. Turn in the shortest direction to your entry heading.

iii. **TIME** – Start timing when wings level or abeam the station, whichever occurs last. Time for the depicted duration, or as appropriate for the altitude if no timing is depicted.

iv. **TRANSITION** – Transition to slow cruise. If a decent is necessary at the IAF, then leave the power at 300 ft–lbs, lower the nose, and descend at 120 knots.

NOTE

Comply with any additional altitude restrictions imposed by ATC.

v. **TWIST** – Twist in the depicted inbound course (316º) in the IND–350.

vi. **TALK** – Give the appropriate voice report if required.

b. Determine the correct direction of turn to intercept the inbound course (315º) in accordance with Holding procedures. **TAIL–RADIAL–TURN!**

c. Start the turn at the completion of your outbound timing. Roll out with a double–the–angle intercept. It is critical to establish the aircraft <u>on</u> the inbound course prior to crossing the station.

d. Once established inbound comply with the remainder of the Low Altitude Instrument Approach Procedures (paragraph 623).

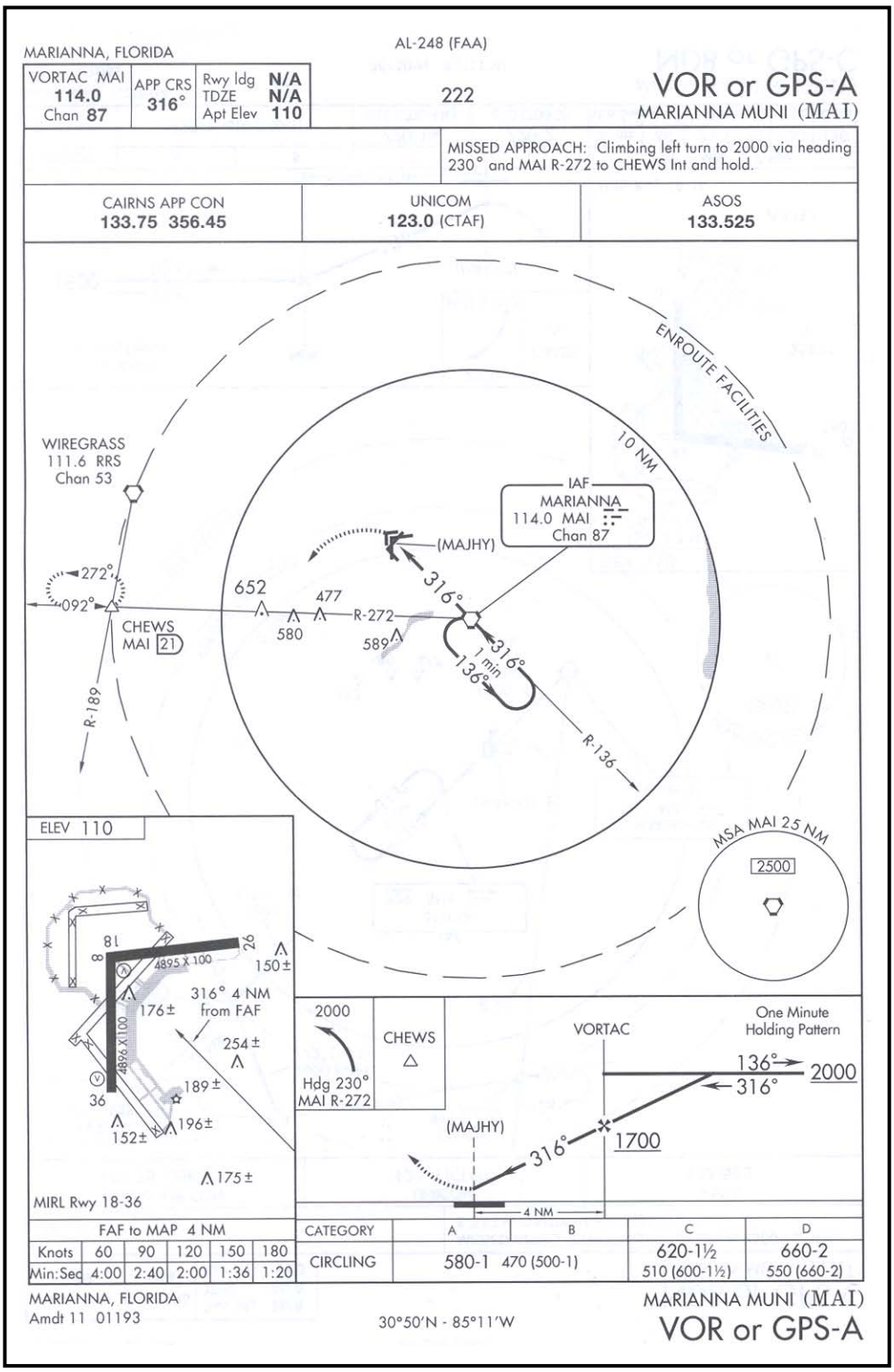

Figure 6–55 VOR or GPS-A (MAI)

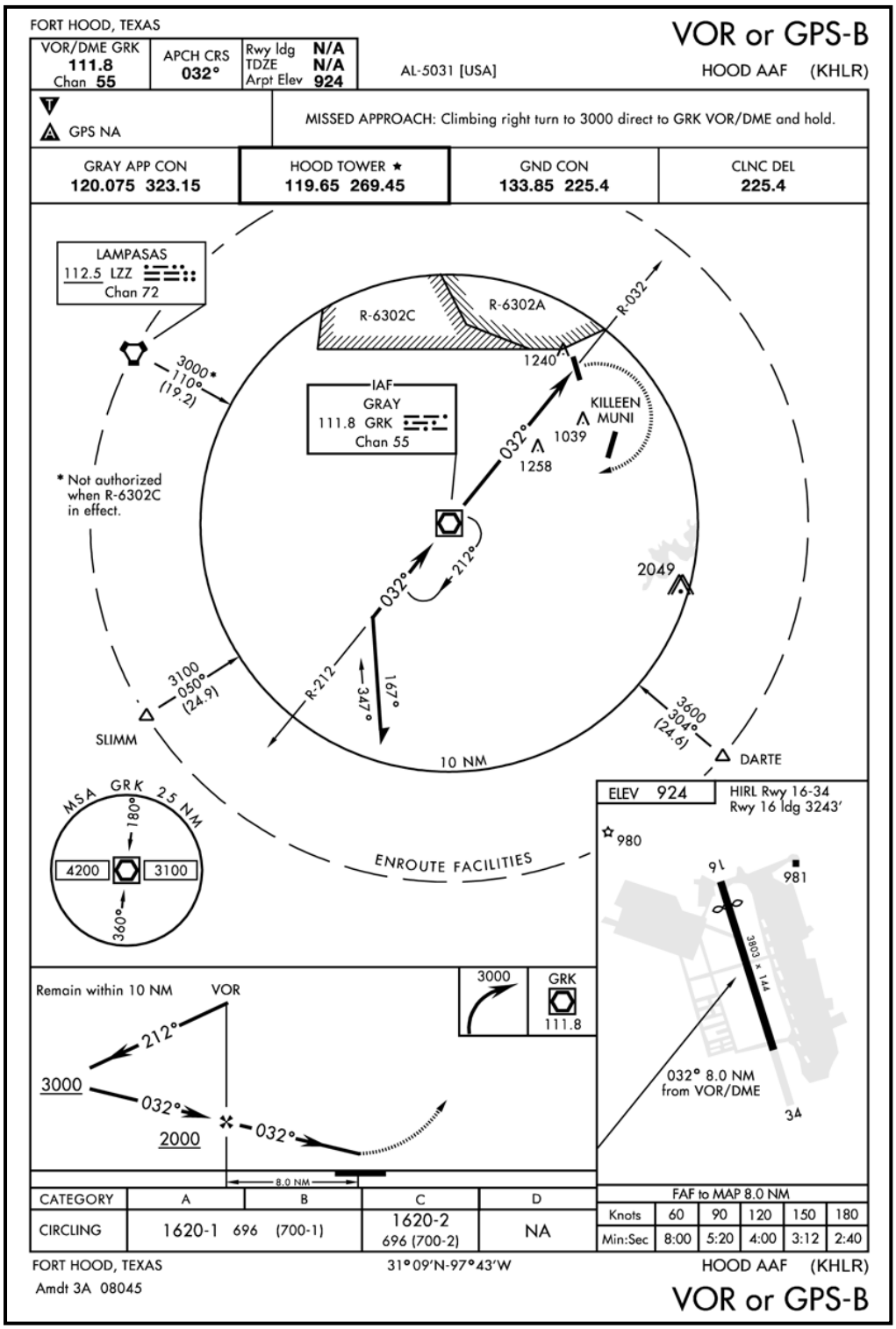

Figure 6–56 VOR or GPS-B (HLR)

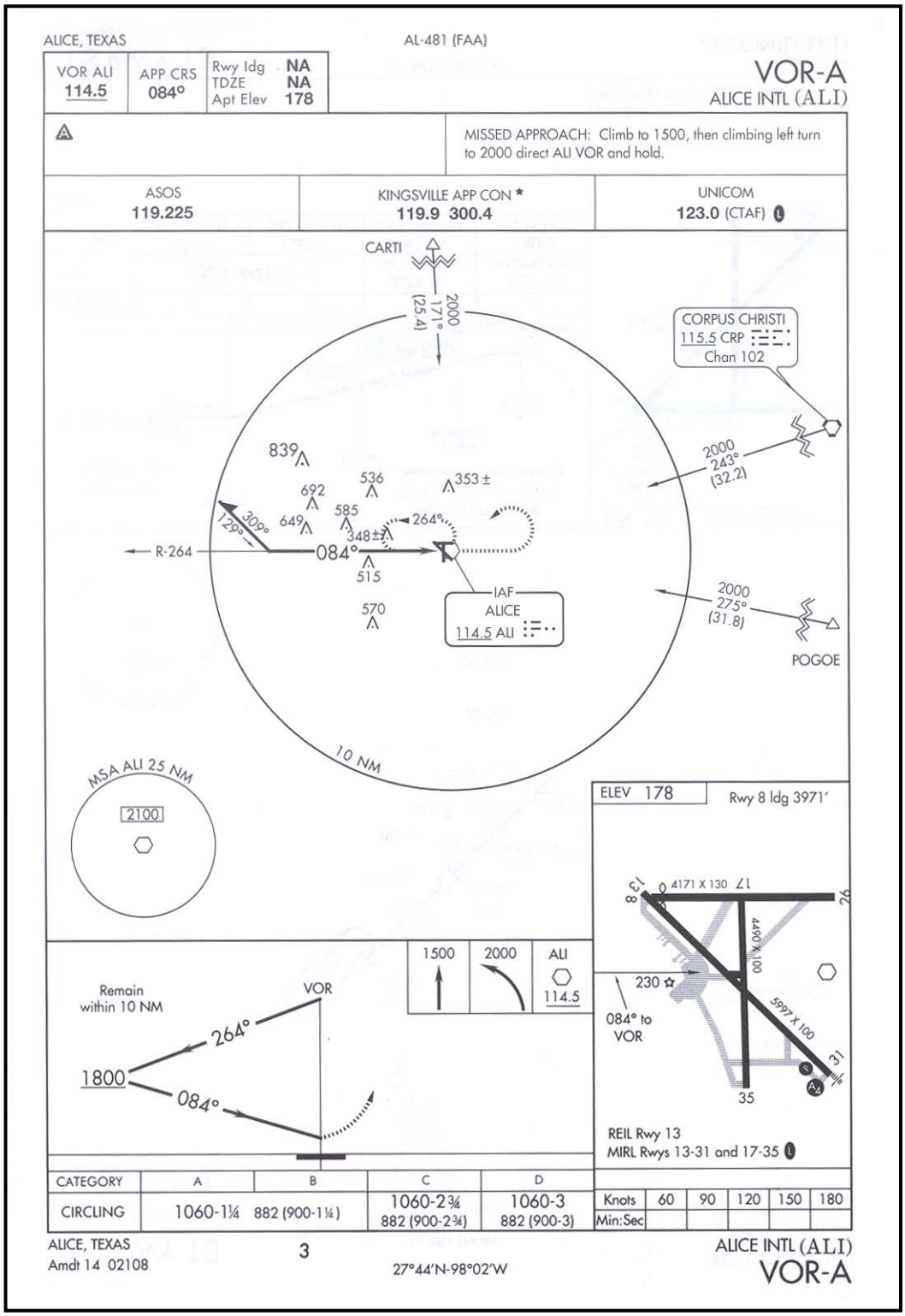

Figure 6–57 VOR-A (ALI)

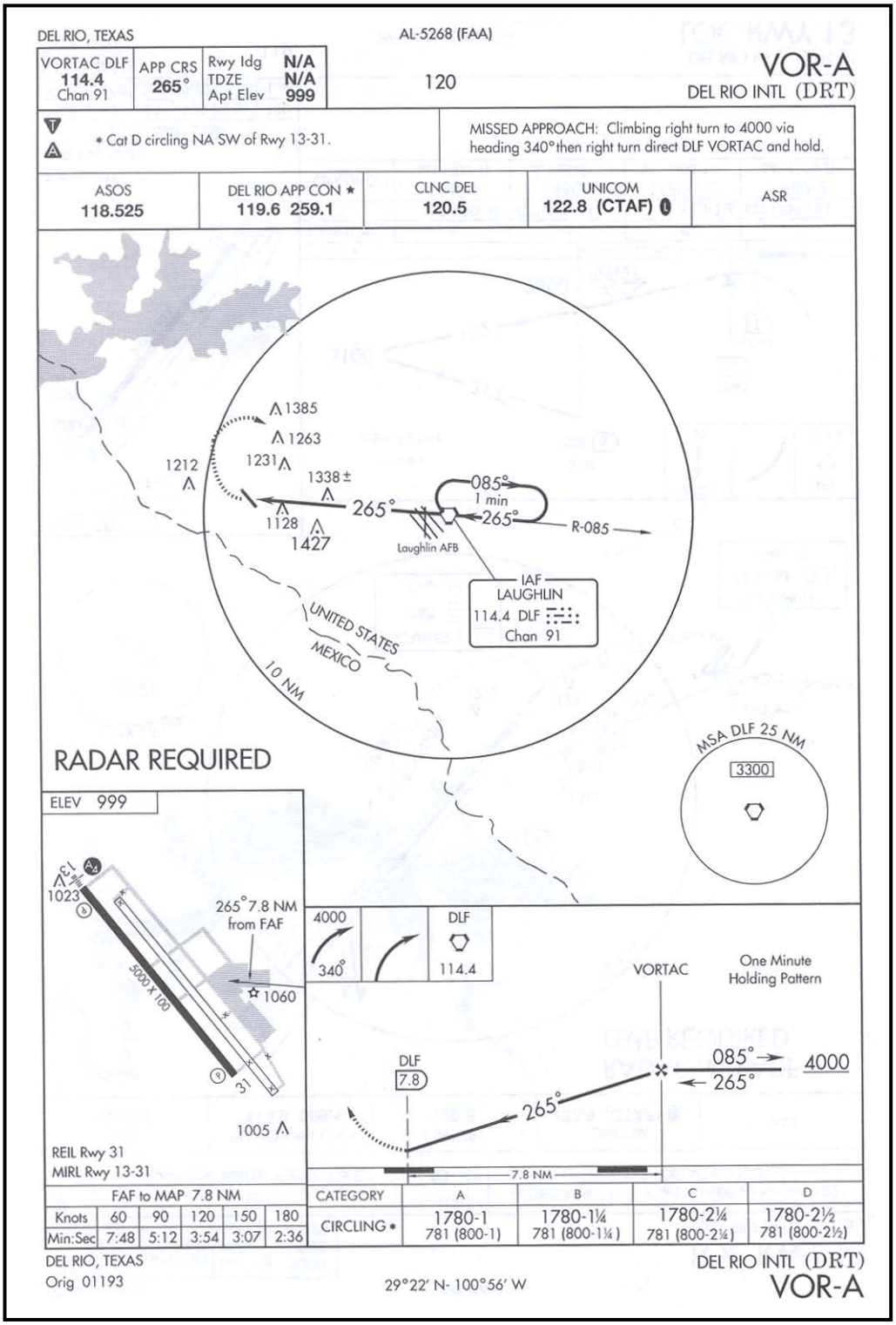

Figure 6–58 VOR-A (DRT)

627. ARCING APPROACH

Reference: NIFM Chapter 20, "Low Altitude Approach Procedures"; and Chapter 21, "Tactical Air Navigation (TACAN)."

1. **Amplification** – An Arcing approach makes use of an arcing maneuver to position the aircraft inbound on the final approach course. Arcing approaches are normally identified by VOR/DME or TACAN in the approach plate margin meaning DME is required. When arcing to final, DME is required, but the margin identification may not require DME if an arcing maneuver is depicted in addition to a Procedure Turn to establish the aircraft on final approach course (Figure 6–67). The term "No PT" on the arc specifies the Procedure Turn will not be flown by aircraft using the arc for the approach.

2. **Arcing Speed Rules**

   a. When executing Arcing approaches, maintain normal cruise speed until 5 NM from the FAF.

   b. If holding at the IAF, and cleared for the approach:

      Accelerate to normal cruise airspeed until 5 NM from the FAF.

3. **Intercepting the Initial Approach Course**

   a. When clearance for the approach is issued, ATC expects an immediate turn in the shortest direction to intercept the initial approach course upon reaching the IAF. Clearance for the approach does not include clearance for the holding airspace. However, normal lead points may be used to intercept the course (case A, Figure 6–59).

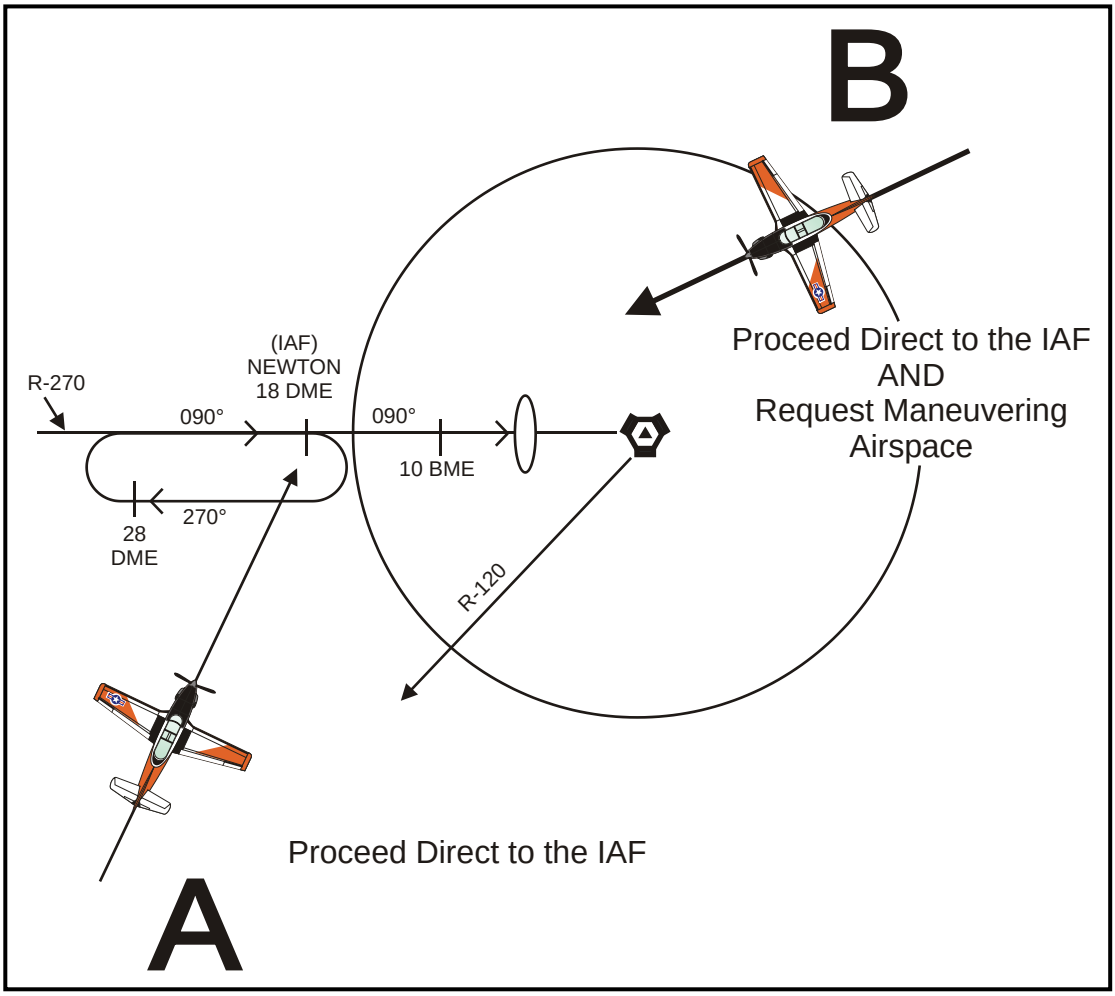

Figure 6–59 Leading the Turn

b. If approaching the IAF at an acute angle (case B, Figure 6–59), maneuvering airspace may be required. If maneuvering is desired, you must first notify ATC of your intent to maneuver prior to the IAF and comply with any restrictions imposed. Since there are no set procedures on how to conduct this maneuver, the following "techniques" are recommended. Seek the advice of your instructor for various circumstances.

i. **If a holding pattern is depicted** at the IAF (Figures 6–63, 6–64, and 6–65), the pilot should make one turn in holding in order to gain favorable alignment to begin the approach. Remember, you are not actually entering into the holding pattern for a delay; therefore, maintain cruise airspeed during the maneuver (observe the maximum holding speed for the holding pattern depicted). Once the turn in holding is complete, continue to track inbound to the IAF.

ii. **If no holding pattern is depicted** at the IAF (Figures 6–68 and 6–69), a Teardrop type maneuver is a simple way to accomplish this. To accomplish the maneuver turn to a heading 30 away from the initial approach course radial and time for 30– 45 seconds. Maintain cruise airspeed. At the end of your

"outbound timing" make a turn to intercept the initial approach course inbound. **TAIL–RADIAL–TURN** (see Figure 6–60). Proceed inbound to the IAF.

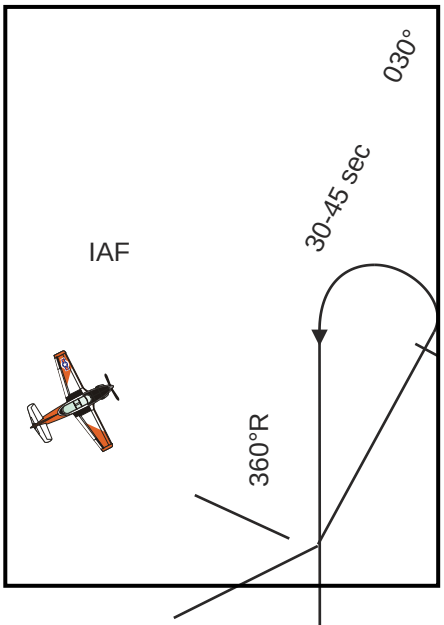

Figure 6–60 Maneuvering Turn

4. **Arc/Radial Intercepts** – On some TACAN approaches, missed approaches and departure procedures, you will be required to fly an arc and then intercept a radial (inbound or outbound) from that arc. In this situation you have to decide when to start your turn off the arc to intercept the radial. You should already be familiar with judging turns off an arc based on needle and CDI movements. However, there is a more refined method available. This method utilizes Radial Spacing (Appendix C) and Radius of Turn (pg. 6 – 58).

Figure 6–61 illustrates a typical situation. Determine when to turn off the arc to fly inbound on the 360º radial (180º course).

a. Determining Lead Radials:

i. Determine the number of radials per mile. Recall from Appendix C that 60 divided by DME equals the number of radials in one mile.

In this example: 60/12 = Five radials per mile on the 12 DME arc.

ii. Calculate the turn radius of the aircraft. This is 5% of the groundspeed. At 120 knots, the turn radius is .6 NM.

iii. Multiply the turn radius by the number of radials per mile. .6 NM X 5 radials/NM = 3 radials.

You should start your turn three radials prior to the desired course. In this example, start the turn at the 357 radial.

b. Other Considerations:

i. The .6 and .8 NM leads are based on a 90º turn. If turning onto an arc or off an arc onto final at anything other than a 90º turn, you may need to adjust your lead point.

ii. Keep in mind that .6 and .8 NM leads are based on groundspeeds of 120 and 150 knots respectively. Winds at altitude may significantly affect groundspeed and should be taken into consideration.

5. **Procedure** – The following procedures assume clearance for the WHITING FLD NAS TACAN RWY 23 approach (Figure 6–62) has been received and you are proceeding direct to the IAF.

a. **At the IAF:**

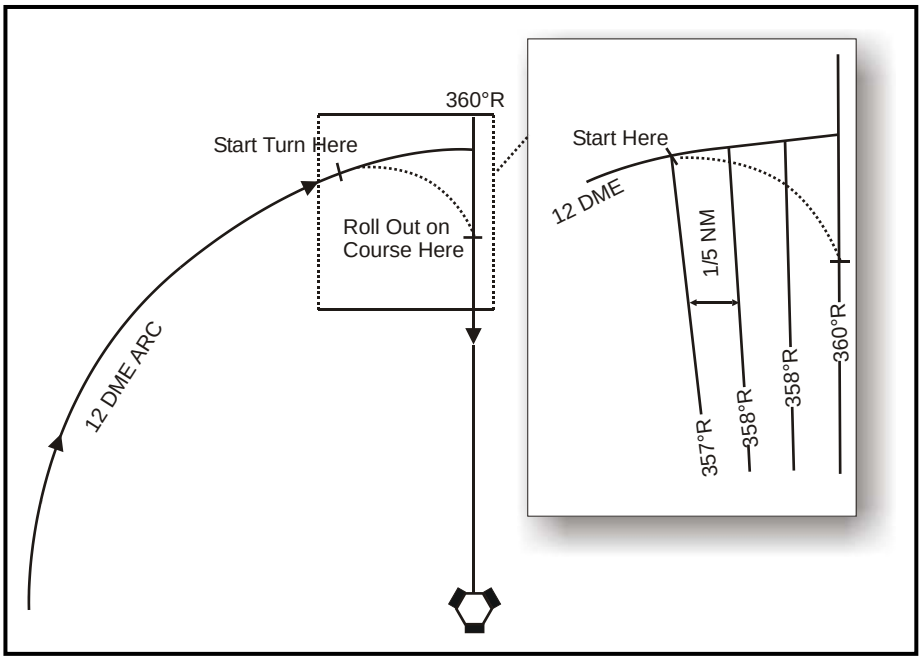

Figure 6–61 Arc to Radial

i. **TIME** – Not applicable.

ii. **TURN** – To intercept and track inbound to the arc on the depicted course (124º). If there is no short inbound segment from the IAF to the arc, (Figure 6–63), turn onto the arc, and begin Arcing Procedures.

iii. **TIME** – Not applicable.

iv. **TRANSITION** – Comply with any altitude restrictions as required.

NOTE

On different approaches the transition at the IAF could involve a descent and/or a reduction in airspeed.

v. **TWIST** – Ensure the inbound course (124º) is set in the IND–350; intercept the course inbound. If already established on the arc, set the final approach course in the IND–350.

vi. **TALK** – Give the appropriate voice report if required.

b. Using the proper lead point, turn to intercept and maintain the arc. This step may occur before the above steps are completed. Once established on the arc twist in the final approach course (211º).

c. When within 5NM of FAF make a level or descending transition to BAC.

d. Anticipate interception of the final approach course referencing the tail of the TACAN needle and the CDI while on the arc. Remember, the turn onto final approach course is a 90º intercept.

NOTE

On some approach charts a published lead radial (designated "LR–XXX") is provided as an advisory point for turning onto the inbound course. These designated lead radials are based on the performance of the aircraft for which the approach was designed. For instance, at Eglin AFB, the approaches and lead radials were designed with the performance of the F–15 in mind. For this reason, published lead radials shall not be used in the T–34C. The pilot may elect to calculate the lead radial based on airspeed and distance from the NAVAID.

e. Once established inbound comply with the remainder of the Low Altitude Instrument Approach Procedures (paragraph 623).

6. **Common Errors**

a. Overshooting the arc or final approach course due to insufficient lead or slow scan of instruments.

b Failure to descend to minimum altitudes for the various approach segments. Remember to refer to the profile view.

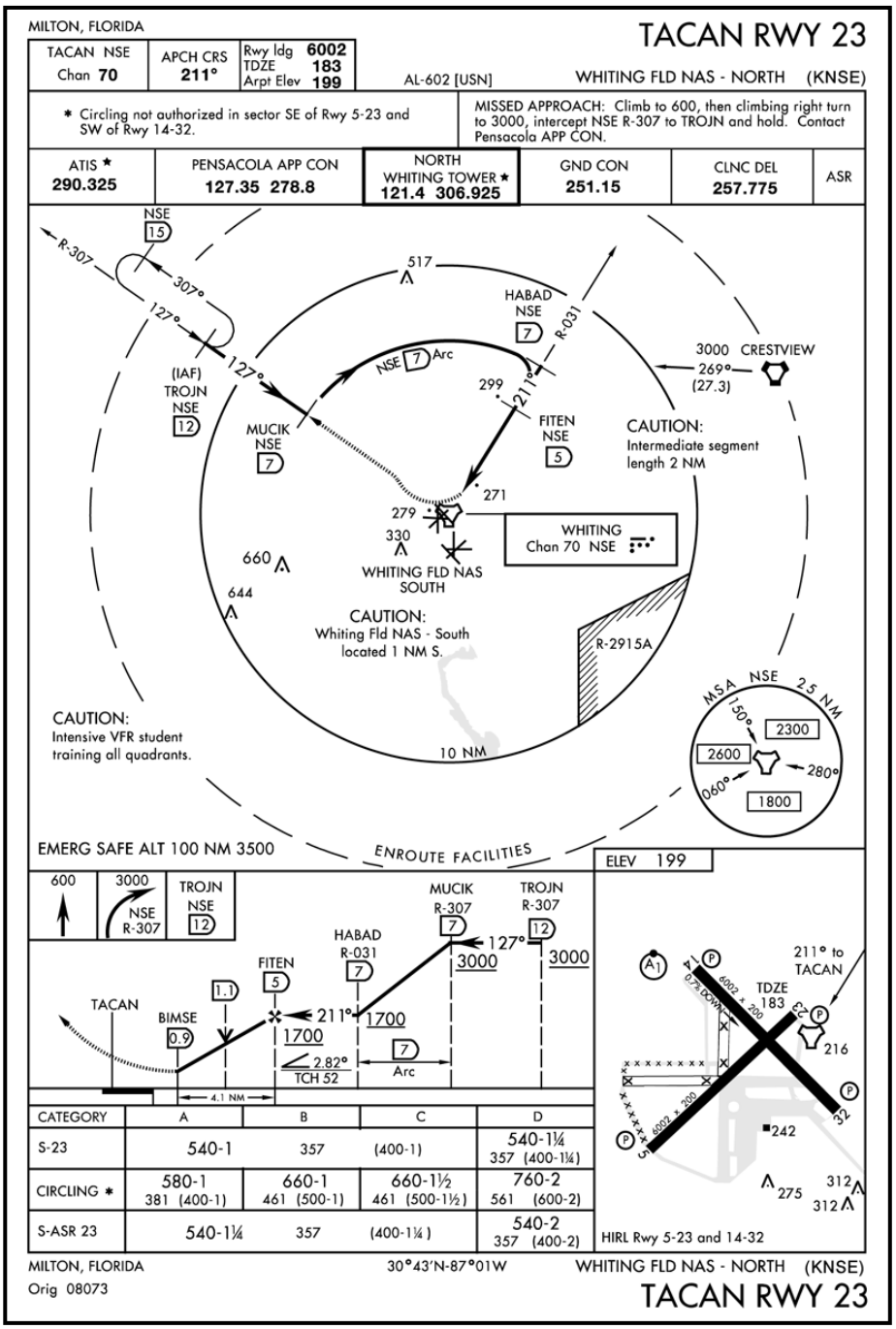

Figure 6–62 TACAN RWY 23 (NSE)

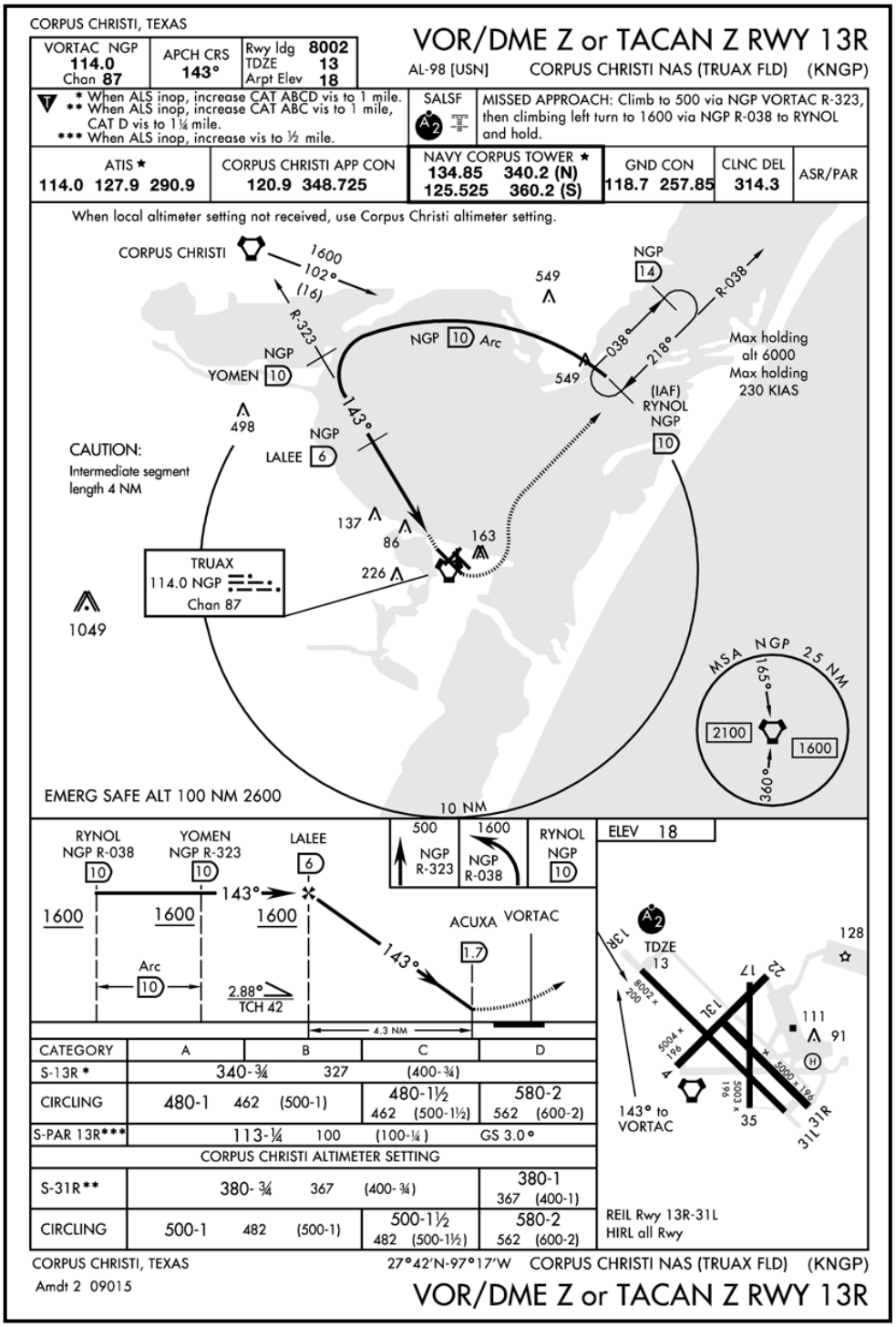

Figure 6–63 VOR/DME Z or TACAN Z RWY 13R (KNGP)

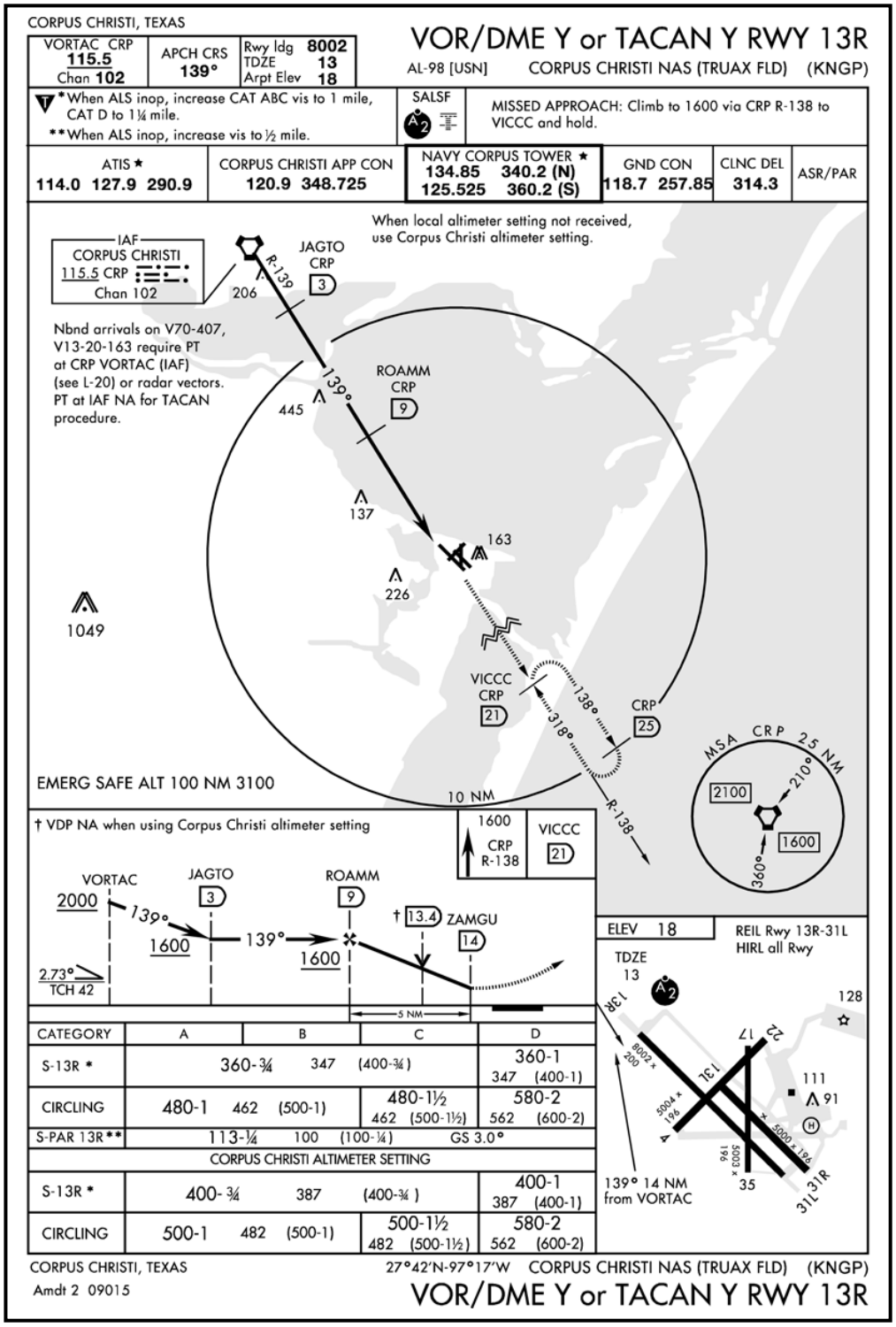

Figure 6–64 VOR/DME Y or TACAN Y RWY 13R (KNGP)

628. STRAIGHT–IN APPROACH

Reference: NIFM Chapter 20, "Straight–In Approaches."

1. **Amplification** – A Straight–in approach is an Instrument approach conducted by proceeding to the FAF at a prescribed altitude and continuing inbound on the final approach course to the airport without making a Procedure Turn. These approaches utilize intersections, TACAN fixes, and other NAVAIDS as an IAF that may or may not be aligned with the final approach course. These approaches sometimes have IAFs located on an airway (including IAFs located on an arc) to simplify the transition from the enroute phase to the terminal phase of flight without having to execute a Procedure Turn type approach.

NOTE

A Straight–in procedure does not mean the approach must be completed with a straight–in landing or made to straight–in landing minimums.

Generally, there are two basic differences in Straight–in approaches:

a. Approaches that have the IAF aligned with the final approach course (FAC) (Figures 6–66 and 6–67).

b. Approaches that do not have the IAF aligned with the final approach course. The term "No PT" designated along a track arrow (thick arrow) from a point identified as the IAF, originating from a feeder NAVAID identified as the IAF (Figure 6–67) or an enroute feeder fix identified as "IAF" (Figures 6–68/69/70) designates you will not fly a Procedure Turn type approach.

NOTE

The absence of the "No PT" designation at the enroute feeder fix or "IAF" for a feeder NAVAID indicates that the feeder fix or NAVAID is solely used to direct the aircraft to an IAF along a designated track and altitude. If cleared for an approach while tracking inbound to the IAF from a feeder fix (thin arrow, NOT designated "NO PT" or "IAF"), you may descend to the altitude depicted along the feeder or IAF crossing altitude, whichever is higher. Upon arrival at the IAF, perform the appropriate approach procedures.

Straight–in approaches may display an arrival holding pattern at the IAF. TACAN or VOR/DME is usually required since the IAF, step–down fixes, and FAF are determined by DME. A variation to this typical approach would be a VOR approach utilizing intersections formed by radial cuts from another facility to provide an IAF or FAF, such as the AUBURN VOR RWY 29 (Figure 6–66).

2. **Procedure.** The following procedures assume that you arrived at the IAF, MINIM, at normal cruise airspeed (no prior holding), and cleared for the STARKVILLE/OKTIBBEHA VOR or GPS–B straight–in approach (Figure 6–70).

a. At the IAF (Using an enroute feeder fix that is identified as either "NO PT" or "IAF" – such as "MINIM"):

i. **TIME** – Not required.

ii. **TURN** – Turn in shortest direction to intercept the initial approach course (258º).

iii. **TIME** – If required.

NOTE

When distance from the IAF to the Final Approach Fix is excessive, i.e., more than 5 NM, cruise airspeed should be maintained and BAC procedure delayed until within 5 NM of the FAF. If DME is not available, the time required to fly to a point within 5 NM can be estimated at a rate of 2.5 miles per minute if flying at 150 knots. In this example, approximately eight minutes are required to proceed to a point within 5 NM of the FAF. (24 – 5 = 19 NM; 19 / 2.5 = 8 minutes). Timing is not required if DME is available, but should be used as a backup in case DME fails.

iv.. **TRANSITION**

(a) If a descent is required, establish the aircraft on course (step "v") and then use terminal descent procedures to descend to the altitude specified (1900 feet) and level off at normal cruise airspeed.

When within 5 miles of the FAF:

(b) Make a level or descending transition to BAC.

v. **TWIST –**

(a) Twist the initial approach course (IAC) into the IND–350 (258º).

(b) Turn to intercept the initial approach course. Track inbound to the FAF.

vi. **TALK** – Give the appropriate voice report if required.

b. Comply with any altitude restrictions on the approach.

c. Once established inbound comply with the remainder of the Low Altitude Instrument Approach Procedures (paragraph 623).

3. **Common Error**

Transition to BAC too early.

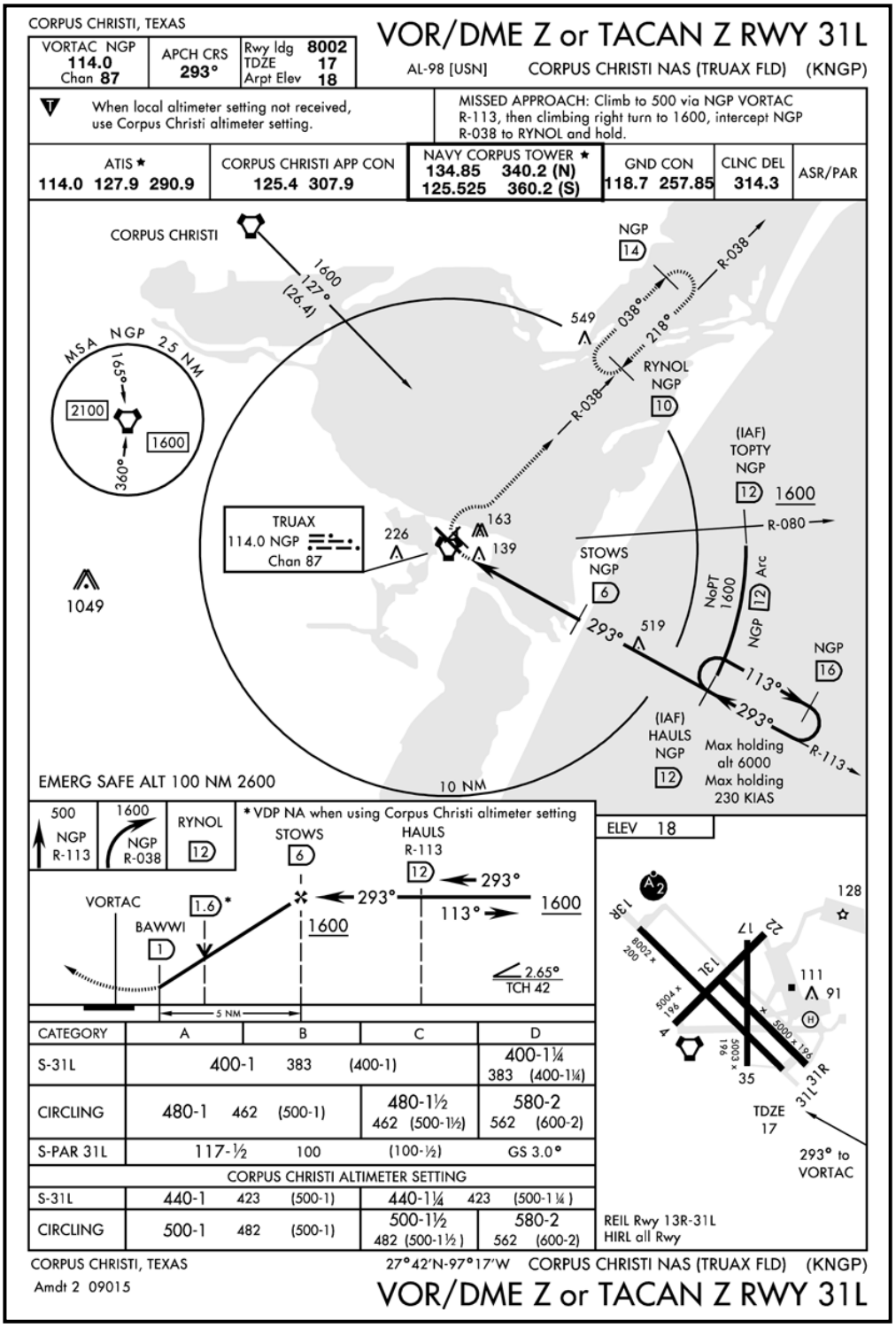

Figure 6–65 VOR/DME Z or TACAN Z RWY 31L (KNGP)

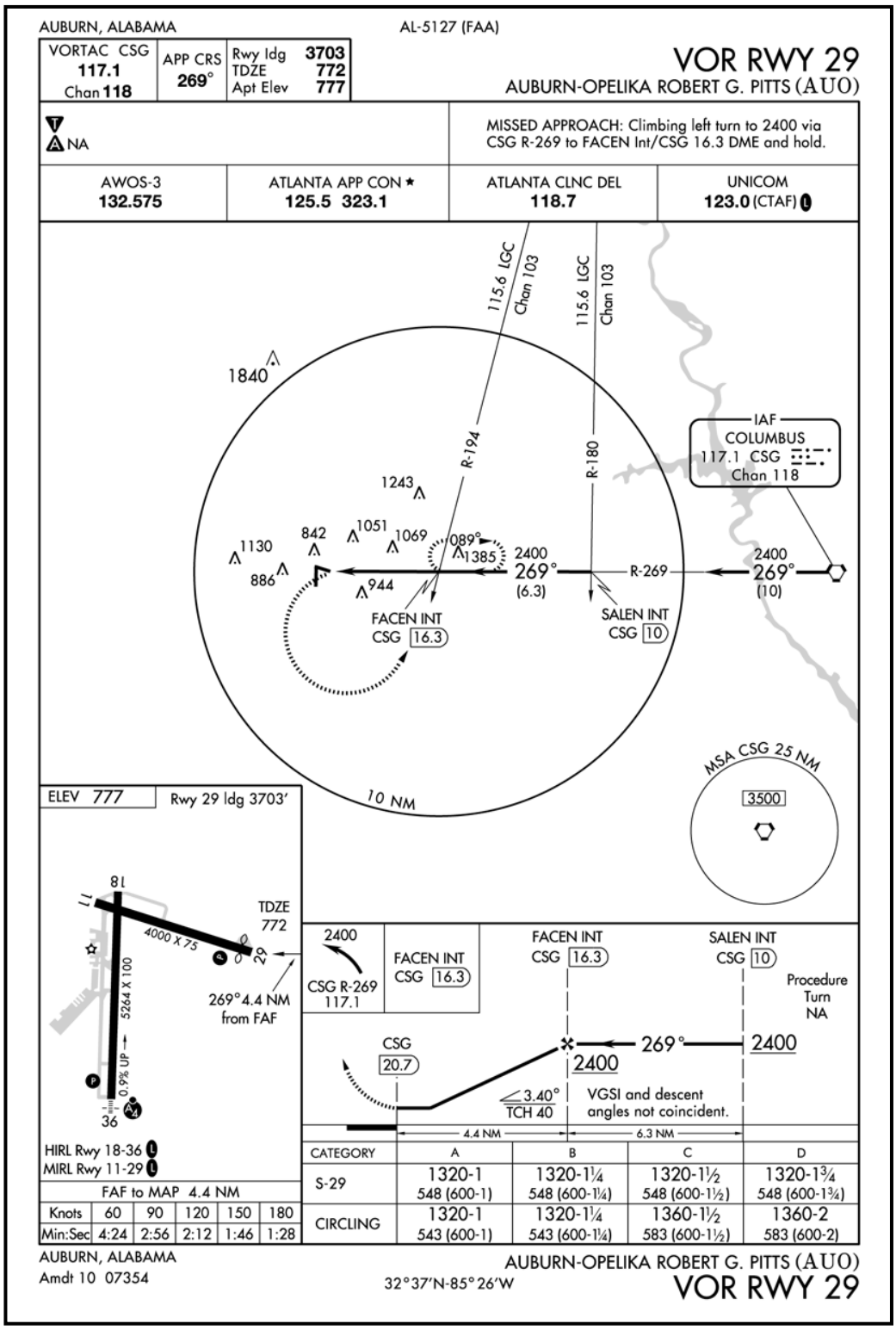

Figure 6–66 VOR RWY 29

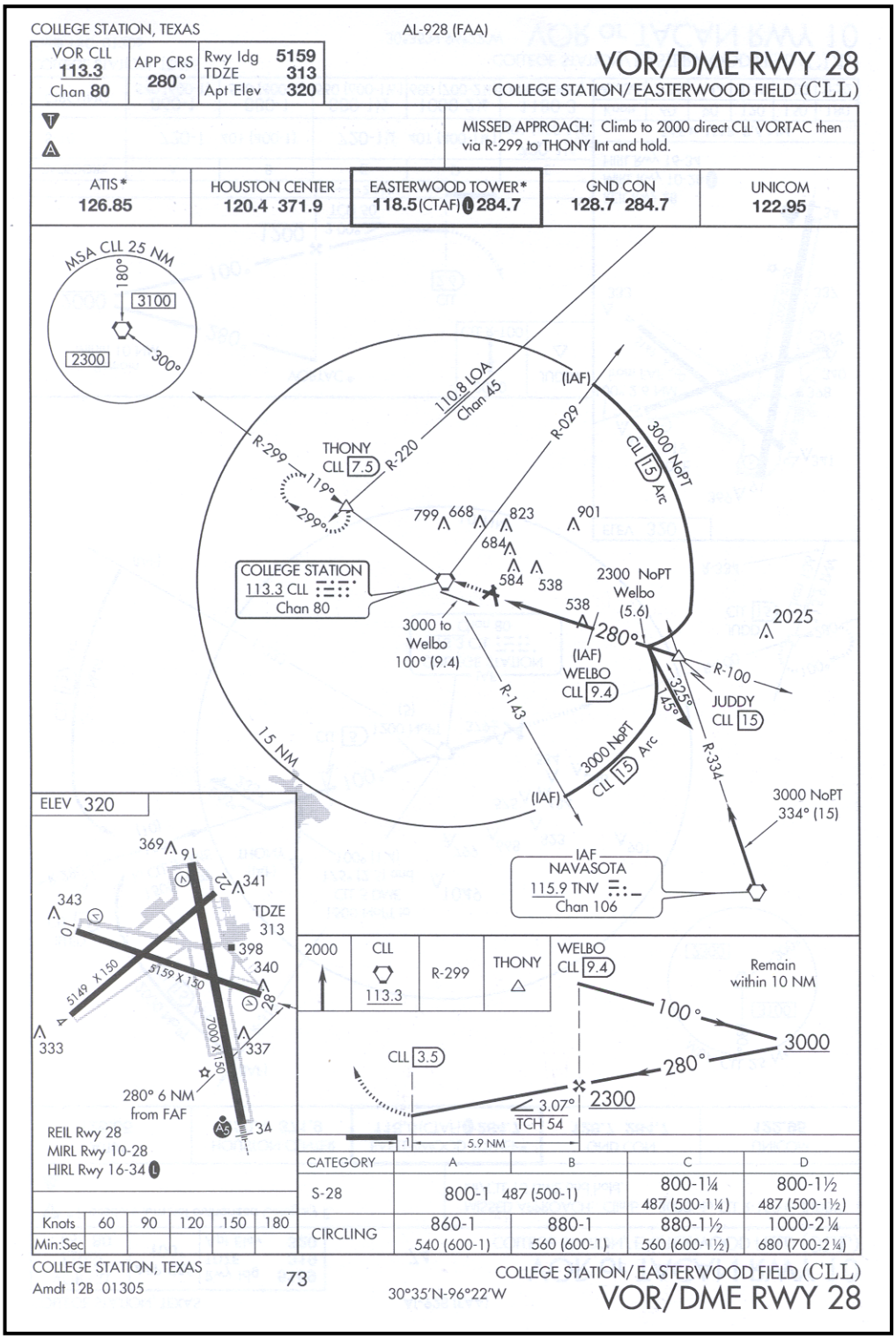

Figure 6–67 VOR/DME RWY 28 (CLL)

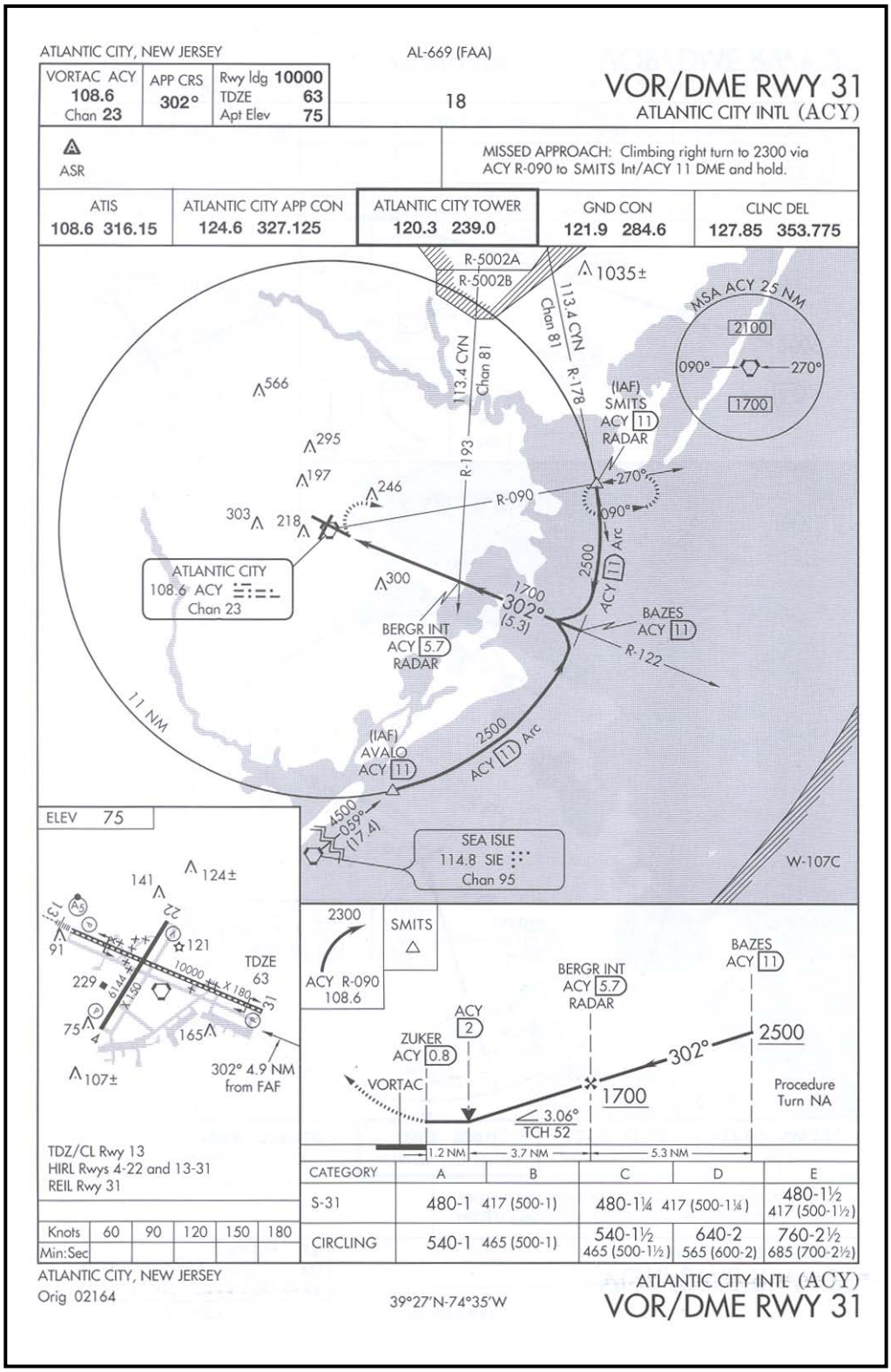

Figure 6–68 VOR/DME RWY 31 (ACY)

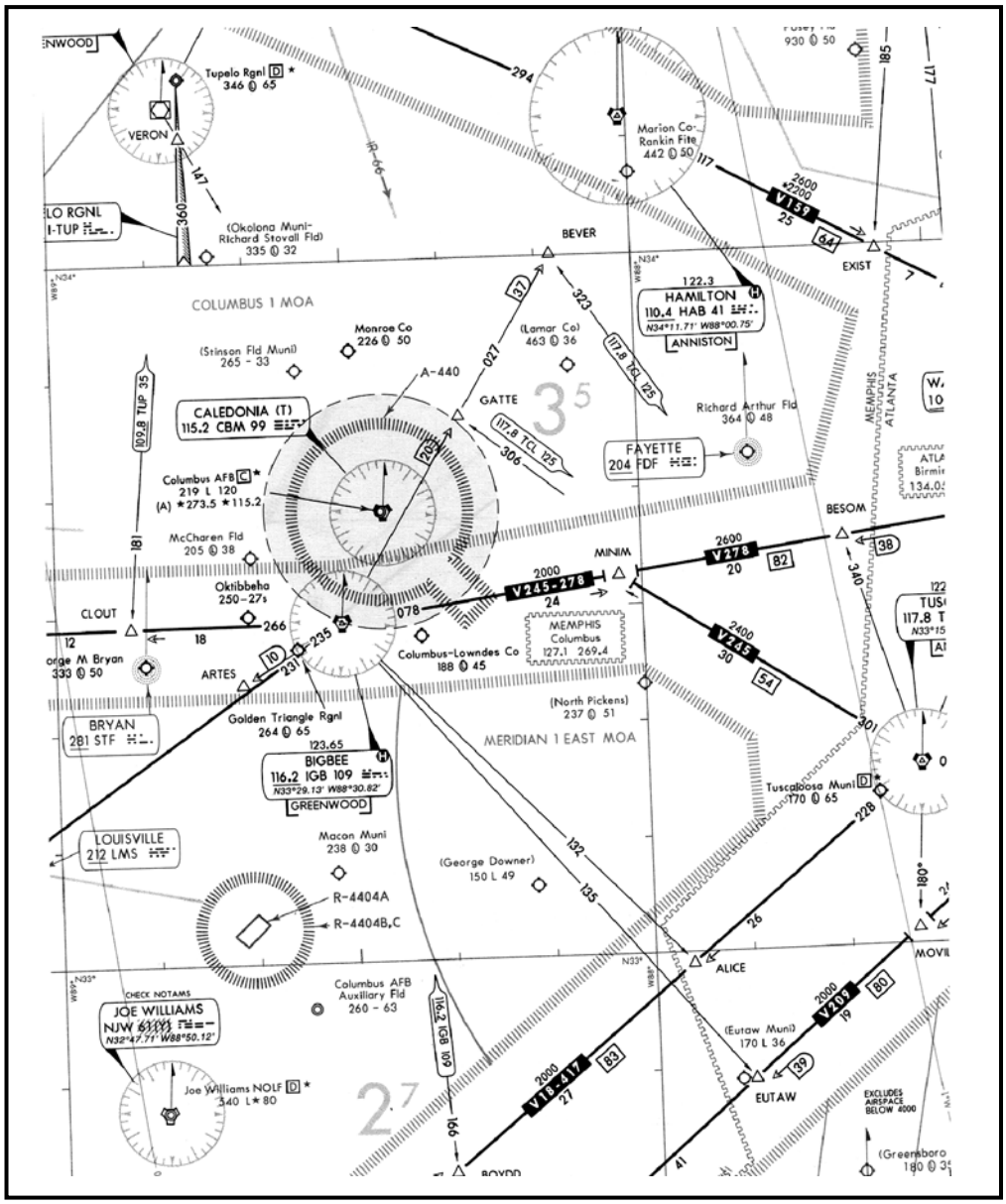

Figure 6–69 L-13/14

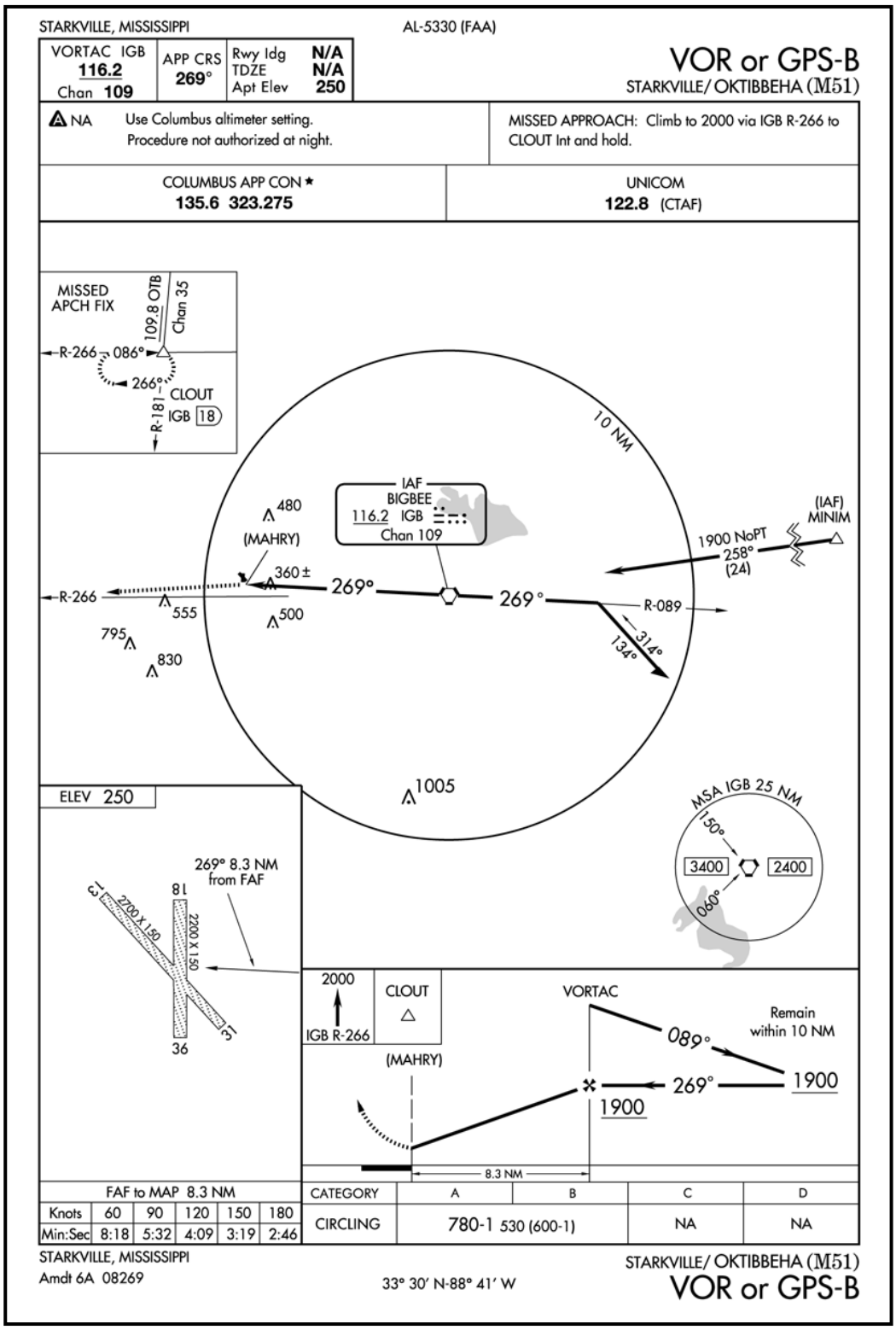

Figure 6–70 VOR or GPS-B (M51)

629. RADAR VECTORS TO FINAL APPROACH COURSE

1. **Amplification** – Radar vectors to final approach course is a procedure used by approach control to increase the arrival rate of aircraft and to establish aircraft on the final approach course through the most expeditious routes consistent with traffic situations. Previous procedures have emphasized the "Procedure Turn" or arcing method of establishing your aircraft on the inbound course to the FAF. However, approach control agencies with radar capability will often vector you from your present position on the airway directly to the final approach course, thereby eliminating the "Procedure Turn" or arcing portion of the approach.

Although this routing does expedite arrival at your destination, it has one characteristic of which you should be aware – the lack of published minimum altitudes until joining a segment of a published approach. Approach control has the statutory responsibility for ensuring terrain clearance while vectoring you for the approach. This is done using Minimum Vectoring Altitude (MVA) charts superimposed on its radar displays. However, the pilot who wishes to double–check the controller must depend largely upon the minimum safe altitudes published on the approach plate and a constant awareness of his own position.

Good pilot technique and good sense dictate you never fully relinquish the responsibility for terrain clearance to an outside agency. Maintain positional awareness and crosscheck terrain clearance altitude by using all available NAVAIDS. Never blindly follow vectors from a controller – be aware of what lies ahead on your assigned heading. If in doubt as to the appropriateness of a given instruction, query the controller.

2. **Procedure** – See Figures 6–72 and 6–73.

   a. Tune and identify the appropriate NAVAID.

   b. Check the VOR/TACAN switch in the appropriate position.

   c. Twist the final approach course into the IND–350.

   d. Follow radar vectors given by approach control.

   e. If a lower altitude is assigned, perform a terminal descent.

   f. Transition to BAC:

      i. When within 5 NM of the FAF and aircraft heading is within 90º of the FAC, or

      ii. Once established on final if no FAF is depicted.

   g. When cleared for the approach, maintain the last assigned altitude and heading given by ATC until established on the approach. As the CDI begins to center, you are expected to turn onto the final approach course and track inbound.

h. Once established inbound comply with the remainder of the Low Altitude Instrument Approach Procedures (paragraph 623).

3. **Common Errors**

a. Poor orientation.

b. Failure to transition to BAC at the appropriate time.

c. Failure to intercept the approach course once cleared for the approach. Be alert for CDI movement and lead the turn sufficiently to roll out on course.

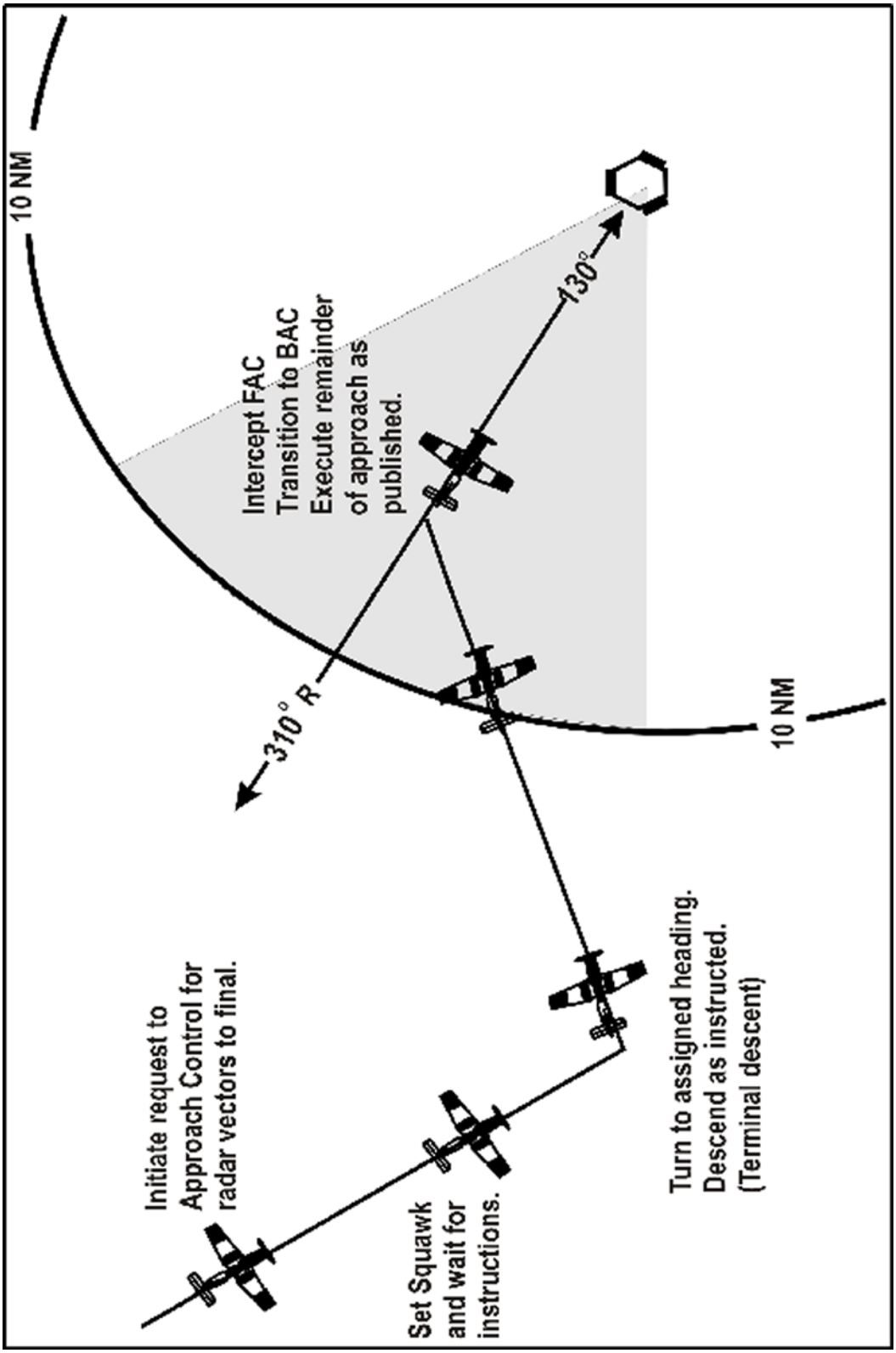

Figure 6–71 RVFAC (No FAF Depicted)

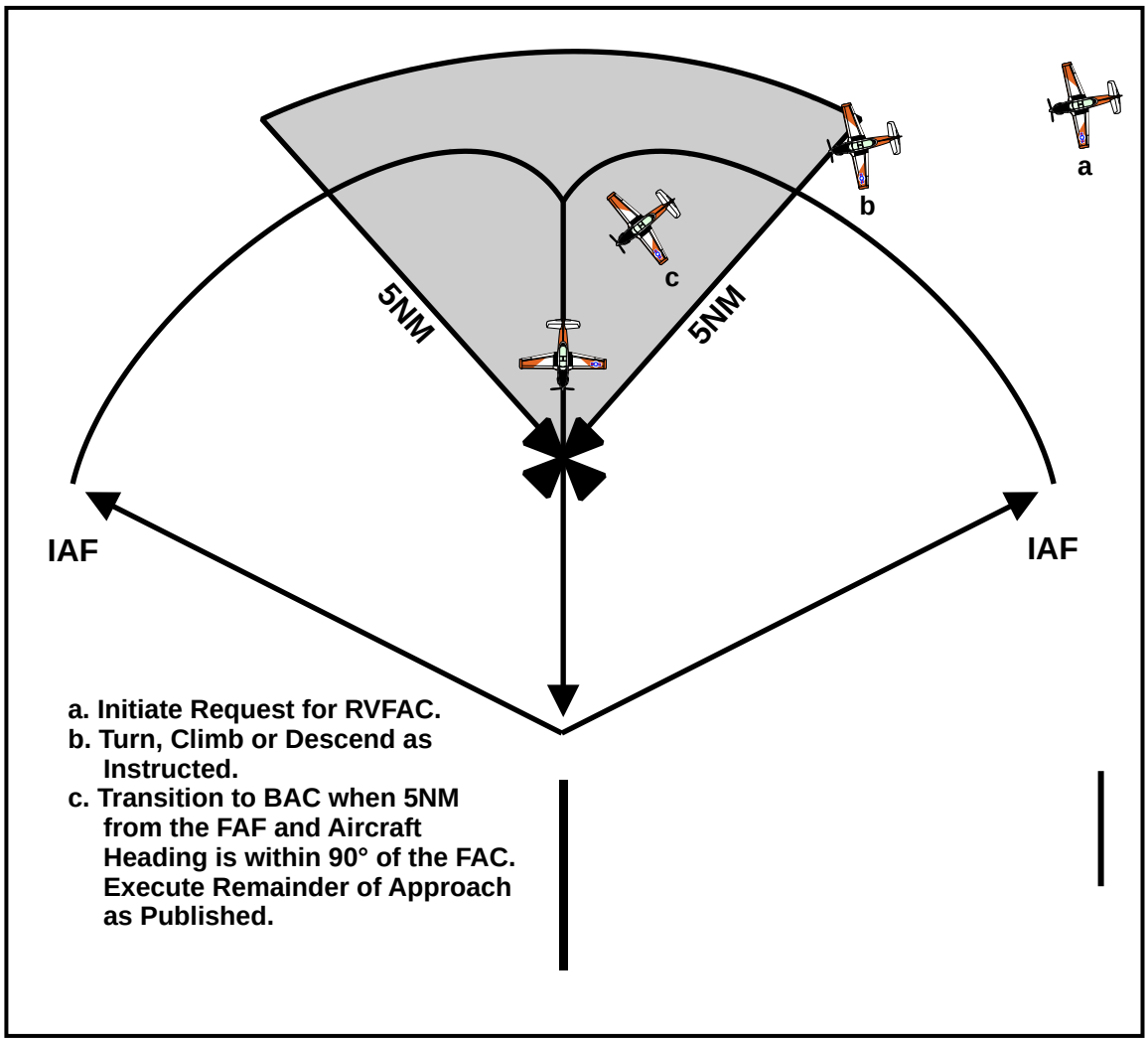

Figure 6–72 RVFAC (FAF Depicted)

630. PRECISION APPROACH RADAR (PAR) APPROACH

Reference: AIM, Chapter 5; NIFM, Chapter 24, "Radar Approaches."

1. **Amplification** – The precision approach radar (PAR) approach uses radar vice aircraft equipment to vector the aircraft to a position for landing during conditions of low ceiling and/or poor visibility. You have been introduced to vectoring procedures during radar vectors to final approach course. During the radar vector procedure, the approach controller used his/her radar capability to direct your aircraft onto a segment of a standard Instrument Approach Procedure. During a radar approach, the controller will direct your aircraft to a position from which you can safely land.

Radar approaches fall into two classes:

a. Airport Surveillance Radar (ASR) approaches which provide course and range information only and are thus non–precision approaches (these use an MDA).

b. PAR approaches provide course, range, and glideslope information and can thus be flown to lower minimums using a Decision Height (DH).

This chapter will address PARs only. The procedures for ASRs are similar but will not be fully discussed until Chapter Seven.

2. **Planning for the PAR**

Preflight – Radar instrument approach minimums are published in the front of FLIP Terminal Instrument Approach Procedures (approach plates) and in the minimum section of approach plates if they have radar approaches available. Published information includes the decision height, weather minimums, and glideslope angle. From glideslope angle and groundspeed the pilot can determine the rate of descent required to maintain glideslope on final using the rate of descent table, also in the back of the approach plates.

Familiarize yourself with this information as part of your preflight planning when a radar approach (PAR or ASR) is available at your destination or alternate.

Figure 6–73 is a sample of the section in the approach plates that contains information on radar approaches. For the purposes of illustration, we will consider the PAR approach to RWY 5 at Mayport NS.

a. Beside the heading of **RADAR** is a list of **frequencies** on which your approach may be used. The x's following the frequencies indicate that the radar site has the capability to work on that frequency but does not monitor it continuously. (Additional notes will be found in the Radio/NAV remarks section of the IFR supplement.)

b. The **runway (RWY)**, plus any referenced notes.

c. The PAR approach to runway has a **glideslope (GS)**, of 3º.

d. The **threshold crossing height (TCH)**, is 39 feet. This means that if you are on glideslope, as you cross the runway threshold, you will be 39 feet above the runway surface.

e. **Runway point of intercept (RPI).** If you remain on glideslope until touchdown, you will land 736 feet down the runway.

f. **Category of aircraft (CAT).** "ABCDE" indicates that the published minimums for this approach applies to all five categories of aircraft.

g. **Decision Height (DH), Minimum Descent Altitude (MDA)** is the MSL altitude of 114 feet in this case. Minimum visibility required for this approach is ½ mile.

NOTE

Runway Visibility Range (RVR) may be listed if used.

h. **Height above touchdown (HAT) and Height above airport (HAA)** is the AGL altitude of the published (DH) or (MDA).

i. **Ceiling–Visibility, (CEIL–VIS),** is used during filing to determine alternate requirements.

OPNAV 3710.7

The T–34C is considered a single–piloted aircraft. OPNAV requires that single–piloted aircraft use 200 feet ceiling/HAT and ½ mile/ 2400 feet RVR as absolute minimums for Instruments approaches. Consider the above example. When you reached the published decision height of 114 feet MSL, you will be at an HAT of 100 feet AGL. In order not to break the 200 feet HAT absolute minimum, you must increase the decision height. In this case, an increase of 100 feet is necessary. This would result in a modified DH of 214 feet MSL resulting in a HAT of 200 feet AGL. In addition, the minimum visibility required to commence the approach would become ½ mile instead of the ¼ mile, had that been the case.

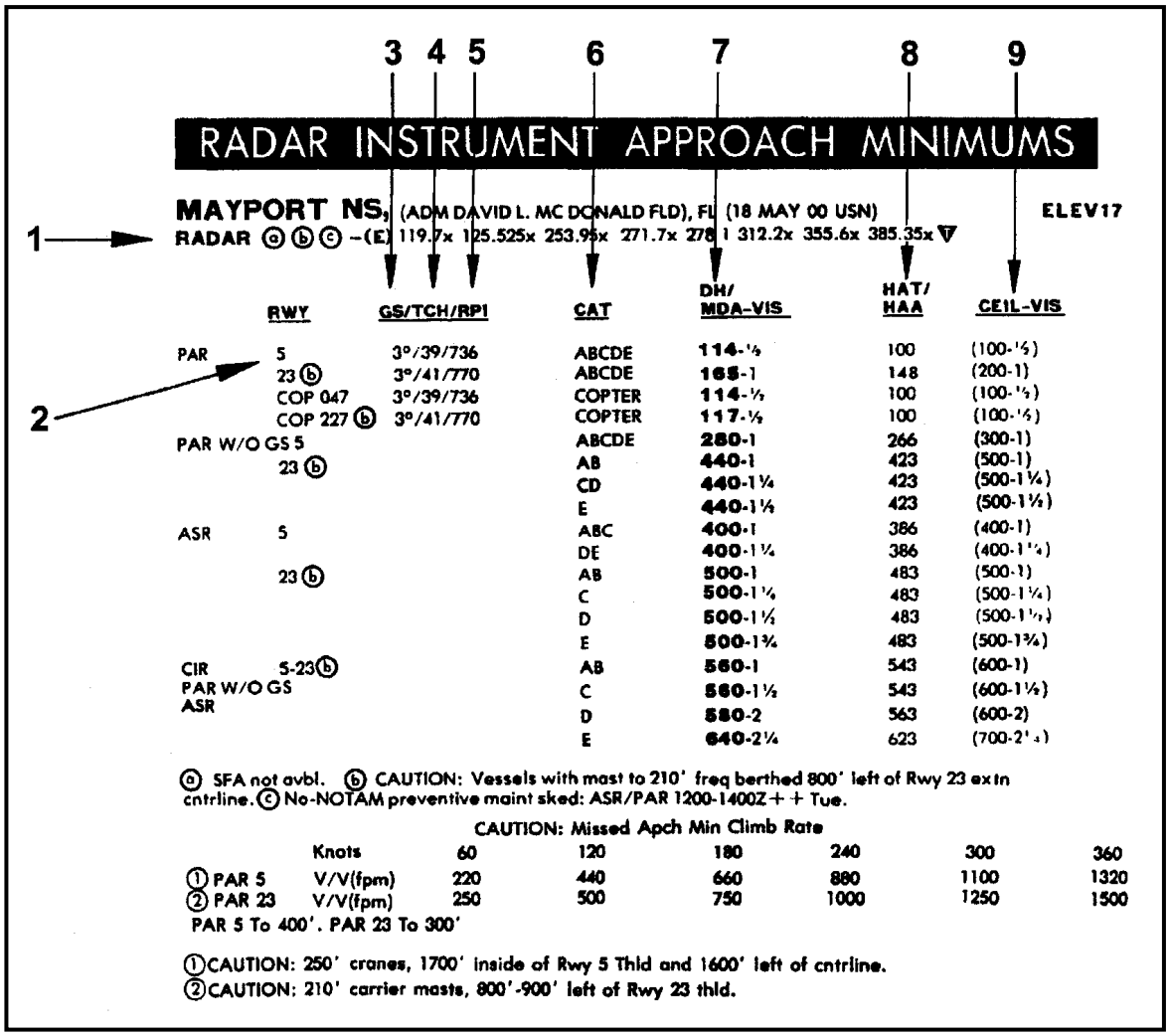

RADAR INSTRUMENT APPROACH MINIMUMS

MAYPORT NS, (ADM DAVID L. MC DONALD FLD), FL (18 MAY 00 USN) ELEV17

RADAR ⓐⓑⓒ –(E) 119.7x 125.525x 253.95x 271.7x 278.1 312.2x 355.6x 385.35x ▽

	RWY	GS/TCH/RPI	CAT	DH/ MDA-VIS	HAT/ HAA	CEIL-VIS
PAR	5	3°/39/736	ABCDE	**114**-½	100	(100-½)
	23 ⓑ	3°/41/770	ABCDE	**165**-1	148	(200-1)
	COP 047	3°/39/736	COPTER	**114**-½	100	(100-½)
	COP 227 ⓑ	3°/41/770	COPTER	**117**-½	100	(100-½)
PAR W/O GS	5		ABCDE	**280**-1	266	(300-1)
	23 ⓑ		AB	**440**-1	423	(500-1)
			CD	**440**-1¼	423	(500-1¼)
			E	**440**-1½	423	(500-1½)
ASR	5		ABC	**400**-1	386	(400-1)
			DE	**400**-1¼	386	(400-1¼)
	23 ⓑ		AB	**500**-1	483	(500-1)
			C	**500**-1¼	483	(500-1¼)
			D	**500**-1½	483	(500-1½)
			E	**500**-1¾	483	(500-1¾)
CIR	5-23ⓑ		AB	**560**-1	543	(600-1)
PAR W/O GS			C	**560**-1½	543	(600-1½)
ASR			D	**580**-2	563	(600-2)
			E	**640**-2¼	623	(700-2¼)

ⓐ SFA not avbl. ⓑ CAUTION: Vessels with mast to 210' freq berthed 800' left of Rwy 23 extn cntrline. ⓒ No-NOTAM preventive maint sked: ASR/PAR 1200-1400Z++ Tue.

CAUTION: Missed Apch Min Climb Rate

	Knots	60	120	180	240	300	360
① PAR 5	V/V(fpm)	220	440	660	880	1100	1320
② PAR 23	V/V(fpm)	250	500	750	1000	1250	1500

PAR 5 To 400'. PAR 23 To 300'

①CAUTION: 250' cranes, 1700' inside of Rwy 5 Thld and 1600' left of cntrline.
②CAUTION: 210' carrier masts, 800'-900' left of Rwy 23 thld.

Figure 6–73 Radar Instrument Approach Minimums

3. **Procedure**

a. Initiate the request for vectors to the PAR. The following approach information will be provided by ATC to aircraft conducting Radar approaches.

i. Type of approach. "This will be a PAR approach to Runway 5."

ii. Altimeter setting.

iii. Ceiling and visibility if below 1000 feet (or below highest circling minimum, whichever is greater) or visibility less than 3 miles.

iv. Special weather observations.

v. Airport conditions important to the safe operation of aircraft.

vi. Lost Communication Procedures, e.g., "…if no transmissions received for 30 seconds (not more than one minute) in the pattern or five seconds on final, attempt contact on 234.5 and proceed VFR. If unable, proceed with the TACAN 23 approach." (See MAYPORT NS TACAN RWY 23 in DOD Volume 15 for illustration.)

vii. Missed Approach instructions.

b. Comply with vectors provided by approach control and the final approach controller. Maintain situational awareness at all times.

c. Transition to BAC and initiate the Landing Checklist once established on downwind or as directed in local SOP.

NOTES

1. Army and Navy controllers are required to advise pilots to "Perform landing checks" while the aircraft is on the downwind leg and in time to complete it before turning base leg. This is done before handoff to the final controller for a PAR approach, or before starting descent on final for a surveillance approach. This is advisory only and not an instruction.

2. Configurations and Airspeeds may vary in the GCA pattern as dictated by local directives.

d. Transition to FAC and complete the Landing Checklist once established on base leg.

e. Expect a frequency change to the final controller on final or semi–final.

f. Begin descent when the final controller advises that you are "on glidepath."

Reduce power to approximately 500 ft–lbs and lower the nose to maintain 100 knots. As a technique, if you lower the nose a number of degrees equal to the published glidescope angle (normally 3º), you will approximate the descent rate required to maintain gildepath.

g. If informed by the final controller of glidepath deviations, make appropriate corrections with coordinated pitch and power. Maintain 100 knots and continue to comply with assigned headings.

h. At decision height (as determined by your altimeter or the controller advising you that you are at decision height, whichever occurs first), if the runway environment is not in sight or you are not in a position to make a safe landing, then execute the Missed Approach instructions.

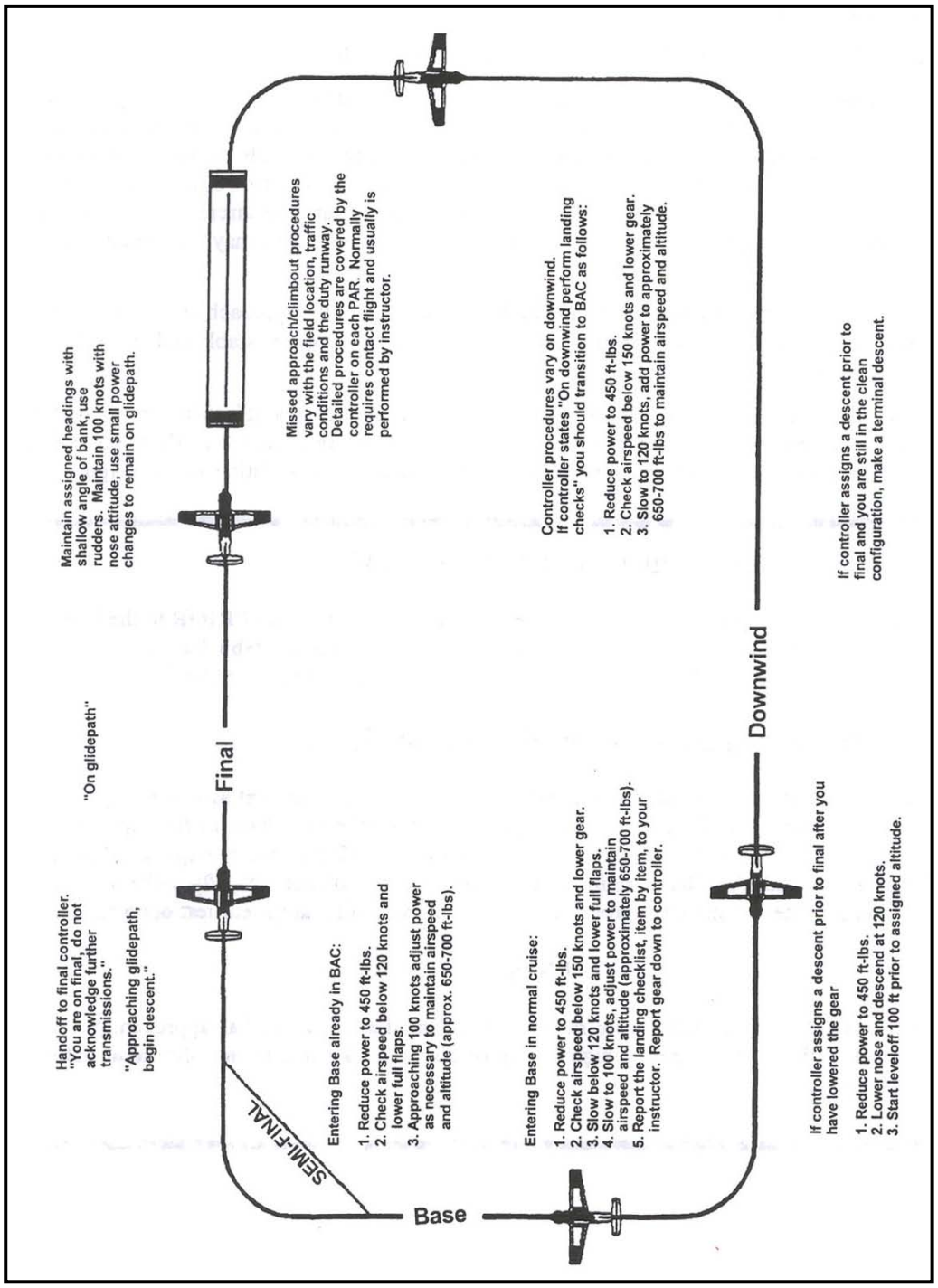

Figure 6–74 PAR "Box Pattern"

631. MISSED APPROACH

Reference: AIM, Chapter 5; NIFM Chapter 29, "Missed Approach."

1. **Amplification** – A Missed Approach is a procedure used to discontinue an instrument approach in the event visual contact has not been established or the aircraft is not in a position to make a safe landing. Your primary concern, if unable to land, is to climb to a safe altitude. Therefore, establishing and maintaining a positive rate of climb should be your first reaction if a Missed Approach is commenced. Your second reaction should be to turn the aircraft (if required) to intercept the missed approach course or to the designated heading. (There may be a mountain dead ahead.)

The Missed Approach instructions are found in the profile view of the approach plate. The student shall review the Missed Approach instructions prior to the FAF, or once established on final if no FAF is depicted.

NOTE

When flying practice approaches, ATC frequently assigns climbout instructions that differ from the published Missed Approach Procedures. You are expected to fly the assigned climbout instructions vice Missed Approach Procedures when executing a Missed Approach.

Missed Approach Prior to the FAF

If executing an instrument approach and full scale deflection of the CDI occurs PRIOR to the FAF, the pilot should make every attempt to return back onto course. If unable to reestablish the aircraft on course, do not descend below the FAF altitude, inform ATC, and follow ATC instructions.

Missed Approach Between the FAF and MAP

If executing an instrument approach and full scale deflection of the CDI occurs at any time between the FAF and the MAP, the pilot shall make every attempt to reestablish the aircraft on the final approach course. If an intercept cannot be safely established, begin an IMMEDIATE climb on the depicted Missed Approach altitude (or altitude ATC has assigned in the event of a Missed Approach), fly to the MAP and execute the Missed Approach Procedure. Advise ATC at the earliest opportunity.

WARNING

Obstacle clearance is not ensured when the aircraft is off the published portions of an approach. With full scale deflection of the CDI in areas of high terrain or obstacles, a climb to the Minimum Safe Altitude may be required.

2. **Procedure** – At the MAP if sufficient visual cues are not available, or a safe landing can not be made, execute a Missed Approach as follows:

a. Increase power to maximum allowable (not to exceed 1015 ft–lbs).

b. Raise the nose to a positive climbing attitude (approximately 6–8 degrees nose up for no flap, 4º nose up for full flap).

c. Check for a positive rate of climb (check the altimeter and VSI).

d. Check the airspeed at or below 120 knots and raise the landing gear (and flaps if applicable). Turn the landing lights off.

e. If flaps were down, transition to 6–8 degrees nose up as the flaps retract.

f. Check and report the gear up and locked to your instructor.

g. Maintain 120 knots and start a Standard–Rate Turn toward the Missed Approach course or heading. Stay on the attitude gyro and maintain the climbing attitude (6–8 degrees).

h. Establish an appropriate intercept to the Missed Approach course or continue the turn to the designated heading. The Missed Approach course may be twisted in the CDI when comfortably established in the Missed Approach.

i. Make the "Missed Approach" report to Tower or the controlling agency if no tower.

j. Level off at Missed Approach altitude.

   i. Two hundred feet prior, commence the transition to level-off.

   ii. Lower the nose toward the level flight attitude and accelerate toward normal cruise.

   iii. Two to three knots prior to normal cruise airspeed, reduce power to 600–650 ft–lbs and retrim.

k. If directed to contact approach control, inform them of your Missed Approach and state your intentions.

Options include:

i. **Request the same approach**. If you flew a bad approach due to your own poor basic airwork, you might request clearance to fly the same approach again.

ii. **Request a different approach** with lower minimums if available.

iii. **Proceed to your alternate**. If weather and/or fuel considerations dictate that you proceed to your alternate, coordinate with ATC to obtain clearance using DRAFT format (Reference Para 502, Section (11), Missed Approach Radio Communications).

l. Update the weather as appropriate.

3. **Common Errors**

a. Scan: When you first execute the Missed Approach, stay on the attitude gyro exclusively until the aircraft is cleaned up and trimmed up. Raise the nose no more than 6–8 degrees above the horizon and your airspeed will not get slow.

b. Letting the nose attitude drop when commencing the turn. This allows the airspeed to get fast and the climb rate to decay. Stay on the attitude gyro and maintain the climb attitude.

c. Not distinguishing between a depicted heading and a radial outbound type of Missed Approach.

d. Not trimming as the aircraft accelerates to normal cruise.

e. Trying to contact Tower or approach before comfortably established in the Missed Approach. However, do not wait an excessive amount of time to make your Missed Approach call either.

CHAPTER SEVEN
INSTRUMENT NAVIGATION

700. INTRODUCTION

In this block of instrument training, you will build upon what you learned in earlier RI training blocks and introduce a few new concepts and procedures. Emphasis will be placed upon operations in the actual IFR environment.

Be ready for deviations from the ATC controller. You may be required to operate "out–of–the–norm" from the way you did things in earlier training. Examples of variations that may require adjustments on your part are:

1. "Maintain 150 knots until the FAF."

2. "Reduce to your final approach speed."

3. Expect frequency changes at the worst possible time. Remember to AVIATE, NAVIGATE, and COMMUNICATE.

4. Unexpected holding instructions.

5. Assigned altitude restrictions even though you are cleared for the approach.

6. Compute your actual ground speed from the FAF to the MAP based on the latest wind information.

The bottom line is listen closely to the radios and be ready for anything. You must know your procedures, but be ready to modify them as the situation dictates.

To the maximum extent possible, instrument flights will be flown using actual approaches to "real" airports during this block of training. When in actual instrument conditions you may be flying without the instrument hood. This can be quite disorienting when transitioning in and out of cloud layers. You must be able to apply proper Instrument procedures while maintaining good basic airwork.

You will become quite familiar with Base Ops and Weather. You will be required to complete a DD 175 flight plan, put it in the ATC system, and then go fly it. You should brush up on filling out flight plans with the help of FLIP, General Planning (GP).

You will also obtain DD 175–1 weather briefs. Dust off those old Meteorology pubs and review such things as Terminal Area Forecasts, Radar Summaries, Winds Aloft, etc. Also, review weather requirements for destination and alternates.

Be sure you have a solid foundation to build upon. Review all RI Procedures and eliminate any questions and "gray areas." Strive for a clearer understanding of the "Big Picture."

701. STANDARD INSTRUMENT BRIEF

Before each flight, the "standard instrument brief" will be conducted along with the standard NATOPS brief. It essentially covers the conduct of the flight and what is expected from both the student and the instructor.

NOTE

These blocks of training may utilize fast cruise or max power for enroute phases of flight, if prebriefed.

702. INSTRUMENT APPROACH BRIEF

This is done in flight before each approach.

Prior to commencing an instrument approach, the student will brief the instructor on the particulars of the approach. The brief should include the following:

1. Approach name and page number (include volume if other than local).
2. NAVAIDS required.
3. Course to set in CDI.
4. Weather minimums (may be deleted if flown in VMC).
5. Segment altitudes, including DH or MDA.
6. Timing.
7. Missed Approach or Climbout instructions.
8. Unusual or other noteworthy items peculiar to the approach.

703. INTERSECTION HOLDING

Reference: NIFM, Chapter 20, "Holding"; AIM, Chapter 5, "Holding," "Holding Procedures."

1. **Amplification**

   a. Intersection Holding is a procedure used to delay aircraft at a fix defined by the intersection of two or more radials. A Holding Pattern may be depicted on Low Altitude charts (see ATHIS intersection, Figure 7–1) or, if not depicted, may be coordinated by the instructor. An intersection may be defined by a single radial and DME (see KLEIN intersection, Figure 7–1). Holding at this type of intersection is addressed in the sections on TACAN holding. This section will cover holding at intersections defined by the crossing of radials from two or more NAVAIDS.

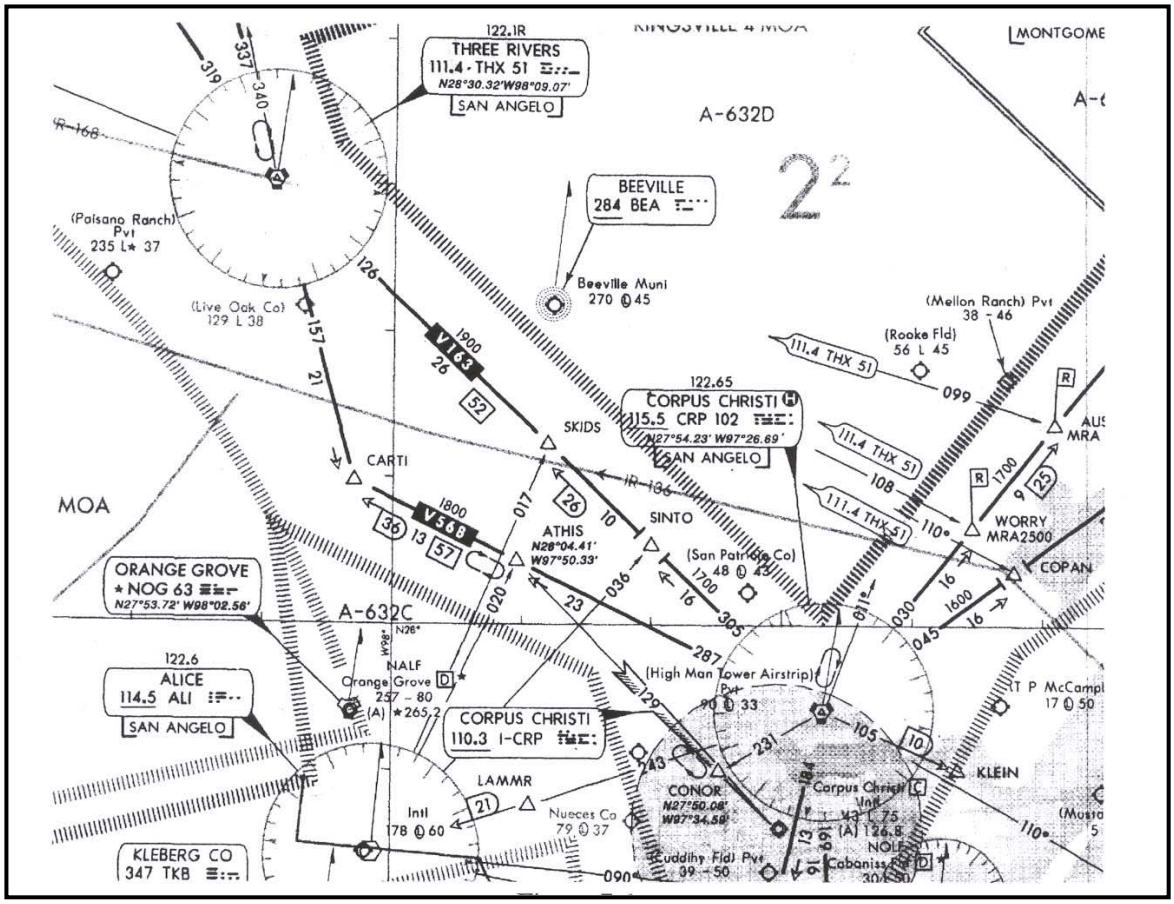

Figure 7–1 Holding at ATHIS

NOTE

To be able to positively identify an intersection formed by the intersection of two or more radials, you must use the radials that have "arrows" associated with them. Example: SINTO intersection can be identified by the combination of the ALICE 36º radial and the CORPUS CHRISTI 305º radial (or just 16 DME off CRP), but the THREE RIVERS 126º radial may NOT be used, since there is no arrow associated with this NAVAID radial to SINTO intersection.

Intersection Holding is similar to VOR station holding in that you treat the intersection as if it were a VOR station you were holding at. However, there are some additional concepts you must understand to become proficient at Intersection Holding.

b. In Radio Instruments, you learned to identify an intersection using two NAVAIDS, the primary and secondary NAVAIDS. Similar concepts are utilized in Intersection Holding and the following definitions are applicable:

i. **Primary NAVAID/Radial**: The NAVAID and radial from that NAVAID upon which the holding pattern is oriented.

ii. **Secondary NAVAID/Radial**: The NAVAID and radial from that NAVAID which defines the holding fix (intersection) on the primary radial. (Figure 7–2)

c. Using normal Intersection procedures identify STUDY intersection. If you are flying direct Point–to–Point to the intersection you will probably intercept the primary or secondary radial prior to arriving at the intersection (unless your tracking was perfect). In either case, the Holding Entry procedures are dependent upon the reciprocal of the holding course at the time you cross the fix.

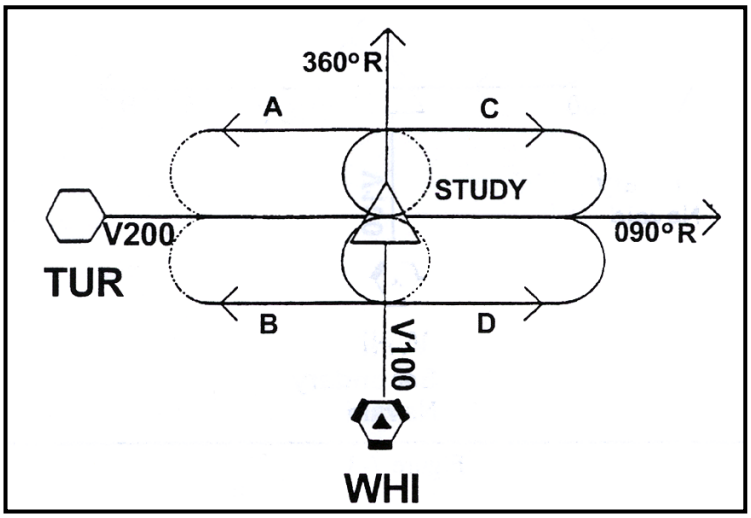

Figure 7–2 Study Intersection

d. When holding at a VOR station the reciprocal of the holding course is always the same as the radial. At an intersection, however, this will only be true when the holding pattern is oriented so that the inbound leg is toward the station. Holding is always inbound to a fix. When that fix is an intersection, the inbound holding course could possibly be away from the station. Inbound to the holding fix does not necessarily mean inbound to the NAVAID.

Figure 7–2 depicts STUDY intersection, which is located at the crossing point of V200 (TUR 90ºR) and V100 (WHI 360ºR). There are four possible holding patterns at STUDY located along V200.

In patterns A and B, the holding course 90º and the holding radial are the same. There are four additional holding patterns, which could be located at STUDY. They would be North and South of STUDY on V100.

2. **Procedure (TWO NAV RECEIVERS)**

a. Intersection Holding can be accomplished with one or two navigation receivers (VOR and TACAN). This discussion will refer to a specific example in which two NAV receivers are used. (Figure 7-3)

For the following example, the aircraft is tracking southbound on V100, North of STUDY intersection, and receives the following instructions from ATC.

"Navy ————, ———— Approach or Center, hold west of STUDY, on Victor 200, left turns, maintain 5000, time is now 28, expect further clearance at time 50."

Pilot reads back the holding clearance.

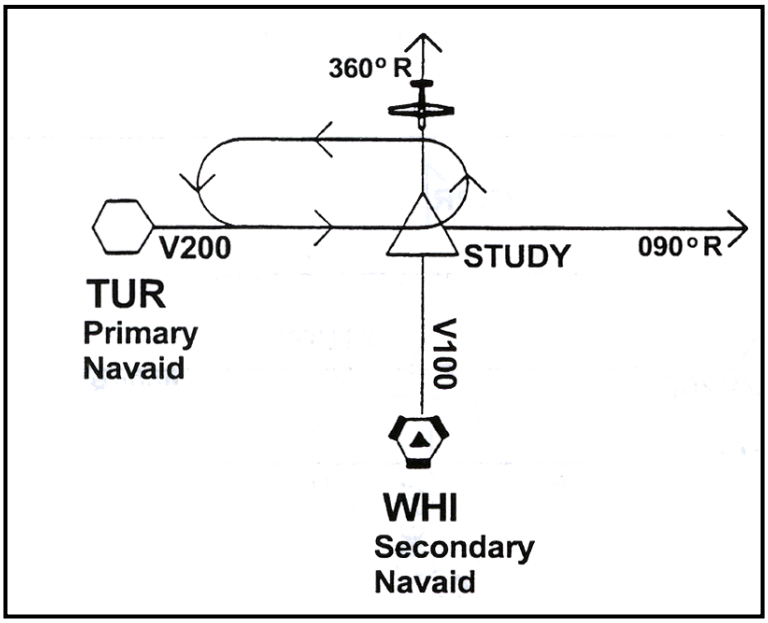

Figure 7–3 Intersection Holding

You decide to keep the TACAN on WHI, and use the VOR on TUR.

b. Determine the direction and heading to turn to for the entry orbit. Use the sector method. (Remember this is non–standard holding.) In this example, 270º equals the reciprocal of the holding course. 270º is within the 110º sector (sector B – RT Parallel) and a right turn to 270º is determined (Figure 7–4a).

c. Using two NAVAIDS Intersection procedures, ensure TUR is tuned in the VOR. Note the tail of the VOR needle. When it is within 10º of the intersection, place the VOR/ TACAN switch in the VOR position and twist 90º, your inbound holding course, into the IND–350. (TUR will be your primary NAVAID in this holding pattern.)

d. At STUDY intersection (when the CDI centers), commence the 6 Ts, turning right to heading 270º to parallel the holding radial. Time outbound for one minute. Timing will commence when wings level on the outbound heading. At the completion of one minute outbound timing, turn to intercept the holding radial inbound to STUDY. Remember, **TAIL–RADIAL–TURN**. If on the holding radial, turn to the holding pattern side (Figure 7–4b). Stop the inbound turn to set an intercept to the holding course (Figure 7–4c). It is critical to establish the aircraft on the holding radial prior to

crossing the intersection; normally a 30 to 45 degree intercept will establish the aircraft on the holding radial.

NOTE

Remember, in stationside holding, inbound to the fix means away from the station. You will be using the tail of the needle to fly inbound.

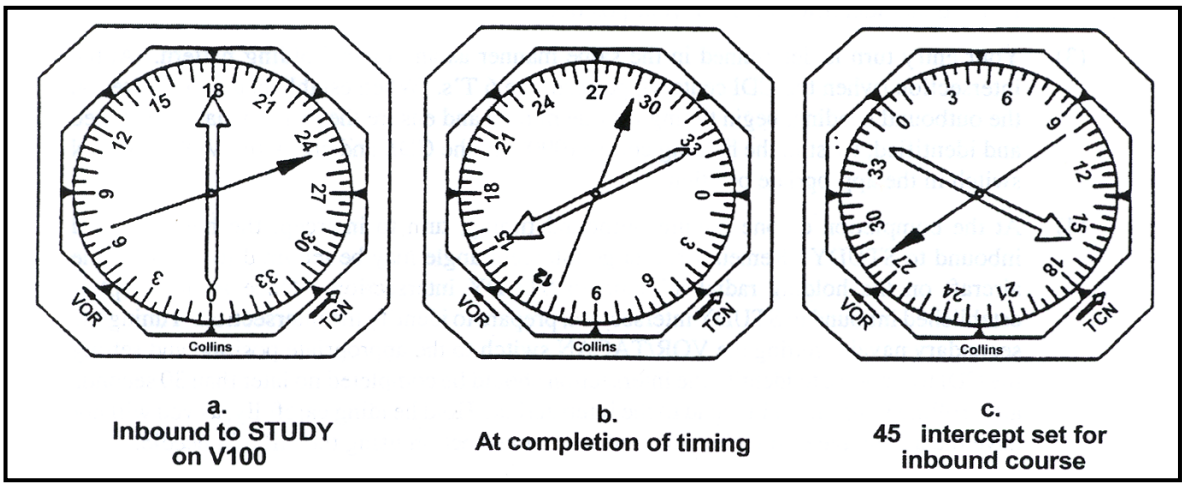

Figure 7–4 Tail-Radial-Turn

e. With the intercept established, wings level inbound to STUDY, place the VOR/TACAN switch in the TACAN position and twist either 360 or 180 into the CDI to identify the intersection. This step should be completed no later than 30 seconds after rolling wings level inbound to the interactions to the intersection. Continue to track inbound to STUDY using the tail of needle of the primary NAVAID.

f. At STUDY intersection, commence the NO-WIND orbit. Using a Standard-Rate Turn, turn left to heading 270º. Start one minute of timing once wings level on the outbound hading. When established outbound twist the holding course (90º) into the IND-350 and switch the VOR/TACAN switch to the VOR position to identify the primary radial.

g. At the end of your one–minute outbound timing, turn to intercept the holding radial inbound to STUDY. Remember, **TAIL–RADIAL–TURN**.

h. Start timing as you roll wings level (with an intercept set or on course) and determine wind direction. **TAIL–RADIAL–WIND**.

i. Repeat step e so that you can identify your arrival at STUDY. At STUDY, note the time to the second. Use this to determine the need for outbound timing corrections (if any).

j. Update correction orbits based on the data from previous orbits. Remember, your displacement from the station will make precise wind corrections more difficult at an intersection.

k. Continue to monitor the time. Be sure to update to the EFC time five minutes prior to the EFC time.

l. When cleared out of Intersection Holding, you may turn direct to the intersection and begin an immediate acceleration to cruise airspeed.

3. **Procedure (ONE NAV RECEIVER)**

Using the same example:

a. Intersection Holding using one NAVAID is very similar to Intersection Holding using two NAVAIDS. However, in this case, you will be using a single NAV receiver to monitor both the primary and secondary NAVAIDS.

b. Three to five minutes prior to reaching the holding intersection ensure the secondary NAVAID is tuned and identified to check your position.

c. Your entry turn is determined in the same manner as any other holding pattern. At the intersection (when the CDI centers), perform the 6 Ts. When established wings level on the outbound heading, begin timing for one minute and ensure the primary NAVAID is tuned and identified, twist in the holding course (90º) in the CDI, and check the VOR/TACAN switch in the appropriate position.

d. At the completion of one minute outbound timing, turn to intercept the holding radial inbound to STUDY. Remember, a large intercept angle may be required to establish the aircraft on the holding radial inbound to STUDY intersection. Once an intercept is established inbound to STUDY intersection, prepare to identify the intersection. Tuning the secondary NAVAID, setting the VOR/TACAN switch to the appropriate position and setting the CDI to a course to identify the intersection should be completed no later than 30 seconds after rolling wings level inbound to the intersection. Hold heading carefully, as you will not have the advantage of tracking inbound to the intersection using the tail of a needle.

e. At STUDY intersection, commence the NO–WIND orbit. Once wings level on the outbound heading (270º), begin timing for one minute. Retune and identify the primary NAVAID and twist the holding course (90º) in the CDI.

f. At the completion of your one–minute outbound timing, turn to intercept the holding radial inbound to STUDY. **TAIL–RADIAL–TURN.**

g. Start timing as you roll wings level (with an intercept set or on course) and determine wind direction. **TAIL–RADIAL–WIND**.

h. Once an intercept is established inbound to the holding fix prepare to identify the intersection. Just like you did in step 4, tune the secondary NAVAID, set the VOR/TACAN switch, and set the CDI to a course to identify the intersection.

i. At the intersection, commence the CORRECTION ORBIT. On the outbound leg apply your predetermined wind corrections, retune and identify the primary NAVAID and twist in the holding course into the CDI. Remember to take into account the greater radial spacing when operating farther away from the station.

j. Repeat Steps f - i for all subsequent CORRECTION ORBITS.

k. Continue to monitor the time. Be sure to update the EFC time five minutes prior to the EFC time.

l. When cleared out of Intersection Holding, you may turn direct to the intersection and begin an immediate acceleration to cruise speed.

4. **Common Errors**

a. Confusing the holding course and holding radial.

b. Using insufficient wind corrections and too shallow an intercept.

c. Waiting an excessive amount of time after turning inbound before setting up your NAVAIDS to identify the intersection.

d. Leading the turn like normal turns at an intersection. For Intersection Holding – you must wait for the CDI to center before entering the holding pattern.

e. Becoming disoriented in the holding pattern.

f. Not obtaining an EFC time prior to entering the holding pattern.

704. AIRPORT SURVEILLANCE APPROACH (ASR APPROACH)

Reference: AIM Chapter 5, Section 4, "Arrival Procedures"; NIFM Chapter 24, "Surveillance Final Approach."

1. **Amplification** – A surveillance approach is a non–precision approach in which the controller provides navigational guidance in azimuth only. The surveillance approach, like the PAR approach, is a special instrument approach procedure and as such will not be described in the approach plates. Airport surveillance radar is less precise than precision radar. Surveillance radar also lacks altitude readout. This accounts for the higher minimums on ASR approaches. It is a good practice to "back up" any Radar approach with a published non–precision approach if possible. Procedures prior to the surveillance final are exactly the same as a PAR, except it will be flown in the Basic Approach Configuration. Refer to the section on PAR for a review of these procedures.

2. **Procedures**

a. Maintain altitude and heading as directed by the controller.

b. Begin descent when directed to "descend to your minimum descent altitude."

Reduce power to 450 ft–lbs. and lower the nose to maintain 120 knots (no glidepath advisories will be given unless requested).

c. Level off at MDA.

100 feet prior to MDA, initiate level off by adding power to 650–700 ft–lbs. and raising the nose.

d. At the MAP, if the appropriate visual references are not visible or you are not in a position to make a safe landing, execute the Missed Approach instructions.

705. NO–GYRO PRECISION APPROACH

Reference: NIFM, Chapter 24, "Radar Approaches," AIM, Chapter 5, Section 4, "Arrival Procedures."

1. **Amplification** – The No–Gyro precision approach is a precision approach flown without the use of an RMI. In this case the word "gyro" refers to your directional gyro, which provides input to the RMI. It is conceivable that during flight your RMI could fail while all other systems essential to flight remain normal. Under such conditions, it would be impossible to perform Instrument Navigation or execute a published instrument approach. However, if you are under radar contact ATC can provide a service enabling you to navigate safely under instrument conditions without an RMI. This service is a no–gyro vector. How can you fly a radar vector with no RMI? The answer is simple if you consider that:

a. The radar controller can observe the track you are making over the ground and adjust that track by assigning headings to fly.

b. Your aircraft has a turn needle (assumed to still be operating).

c. Your aircraft has an operating attitude gyro.

The radar controller, knowing your present track, can apply a procedure very similar to the timed turns you learned in BI. In this case the controller tells you to start and stop turns and performs the timing between starts and stops.

These no–gyro vectors can be used to vector you to VFR conditions for a visual landing or to vector you through a ground controlled approach. This section will address the No–Gyro PAR. It is a good practice to "back up" any Radar approach with a published non–precision approach if one is available. Since the No–Gyro approach is primarily designed as a response to an inflight equipment failure, preflight planning will be limited. The same glideslope and DH that apply to

the standard PAR also apply to the No– Gyro approach. This information should be reviewed prior to any GCA.

2. **Procedure**

Review the PAR Procedures from Chapter 6. No–Gyro Procedures are the same with the following exceptions:

a. Make a specific request for a "No–Gyro PAR" when you contact approach control.

b. Make all turns at standard rate until on final approach, then make turns at half–standard rate, unless instructed otherwise by ATC.

c. Roll into turns promptly and verbally acknowledge ATC upon hearing the words “turn right” or “turn left”. Roll wings level and acknowledge on receipt of the words “stop turn”.

NOTES

1. The standby compass may be used for orientation during the No–Gyro approach. Use this compass only for orientation and not for maintaining heading.

2. These same procedures can be applied to a No–Gyro ASR if a PAR is unavailable.

706. LOCALIZER APPROACH

Reference: NIFM, Part 5, Chapter 23, "Instrument Landing System," AIM Chapter 1, "Instrument Landing System."

1. **Amplification** – The Localizer approach makes use of a localizer transmitter, a component of an instrument landing system, to provide course guidance to the runway centerline. The localizer transmitter operates in the frequency range of 108.1 MHz to 111.95 MHz (odd tenths). There are two types of Localizer approaches – front course (Figures 7–9 and 7–10) and back course (Figures 7–11 and 7–12). The back course signal is transmitted along extended runway centerline, in the opposite direction of the front course. Course guidance can be received at a distance of 18 NM from the transmitter at 1000 feet above the highest terrain along the course line to 4500 feet above antenna elevation. Off–course indications are reliable within 10º along course out to 18 NM and within 35º out to 10 NM (Figure 7–5) unless otherwise indicated on the approach plate.

The ILS or Localizer approach can be easily identified on IFR Enroute Low Altitude approach charts with the "ILS approach" symbol. See the ILS approach "feather" into GULFPORT–BILOXI Regional Airport and NEW ORLEANS International Airport, Figure 7–7.

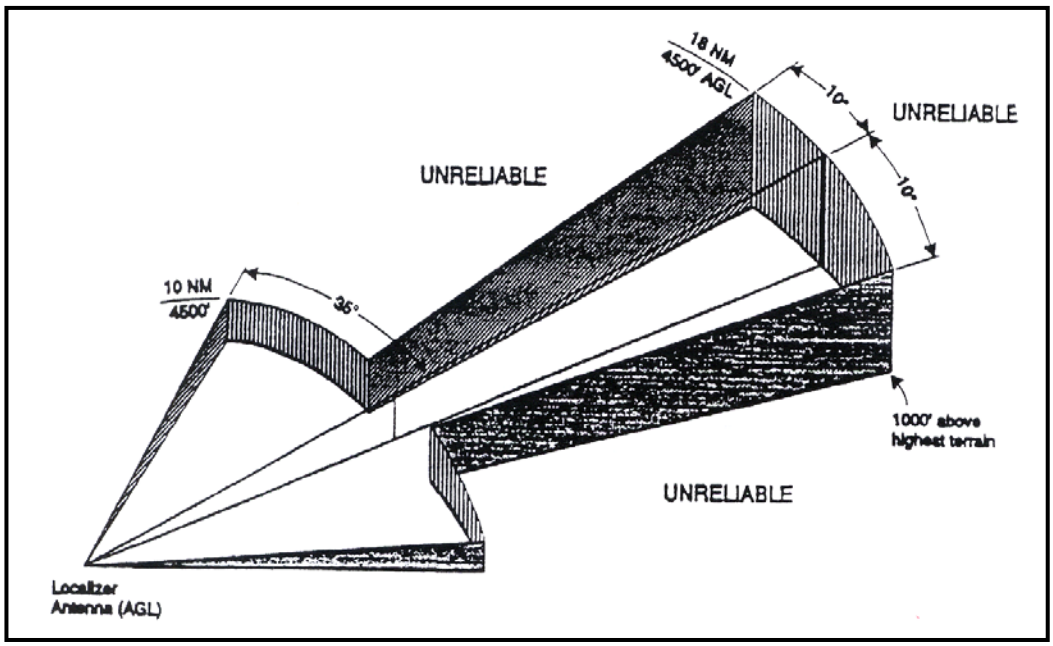

Figure 7–5 Normal Limits of Localizer Coverage
(Same area applies to back course when provided)

The Localizer approach is identified in the approach plate margin by the letters "ILS" (if a localizer is available within the ILS, it will be identified as "S–LOC" in the listed minimums section), LOC, or LOC BC. Although the Localizer procedure is a Non–Precision approach, the Straight–in minimum descent altitude is normally lower than the MDA for approach procedures using VOR or TACAN for course guidance. When executing a portion of an approach, such as the Localizer portion of an ILS approach, you will be cleared for the approach as listed in the approach plate margin. For example, you are executing the Localizer approach off the PENSACOLA REGIONAL ILS RWY 17 approach (Figure 7–8). You will be "... cleared for the ILS approach" even though you are executing a Localizer approach. The Localizer frequency is identified by the letter "I" followed by the three–letter identifier. i.e., "I–UDL" with its four–letter Morse code.

The frequency box may be in one of two forms:

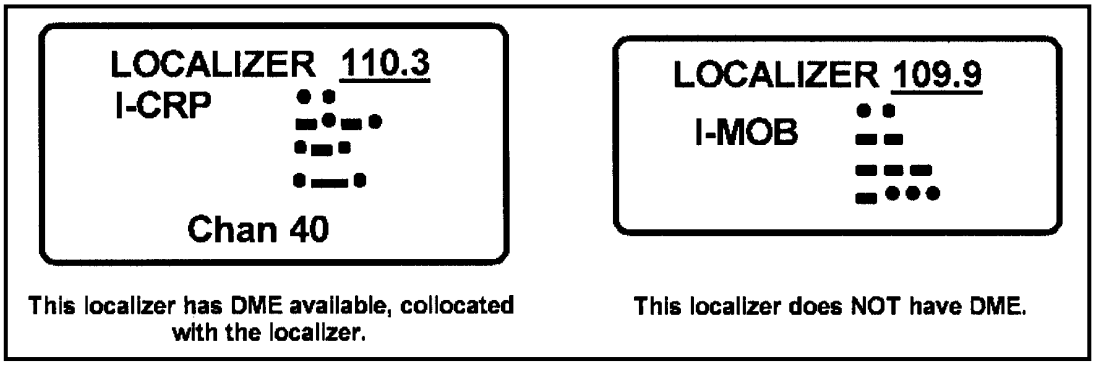

Figure 7–6 Localizers

With a localizer frequency selected in the aircraft's VOR and the VOR/TACAN switch selected to the VOR position:

a. The course deviation indicator of the IND–350 is four times more sensitive, each mark indicates ½° of deviation with a full scale deflection of ± 2½° from CDI centerline.

b. The OBS knob will not effect the CDI movement.

c. The TO/FROM flag disappears from view.

d. The VOR needle will park at the three o'clock position of the RMI.

Since the T–34C is not equipped with an ADF or marker beacon, a Localizer procedure is not authorized unless the Final Approach Fix is indicated by:

i. DME.

ii. A radial cut – the arrow must pass through the FAF.

iii. Radar fixing – you must request that ATC inform you when you are at the FAF.

iv. GPS database fix.

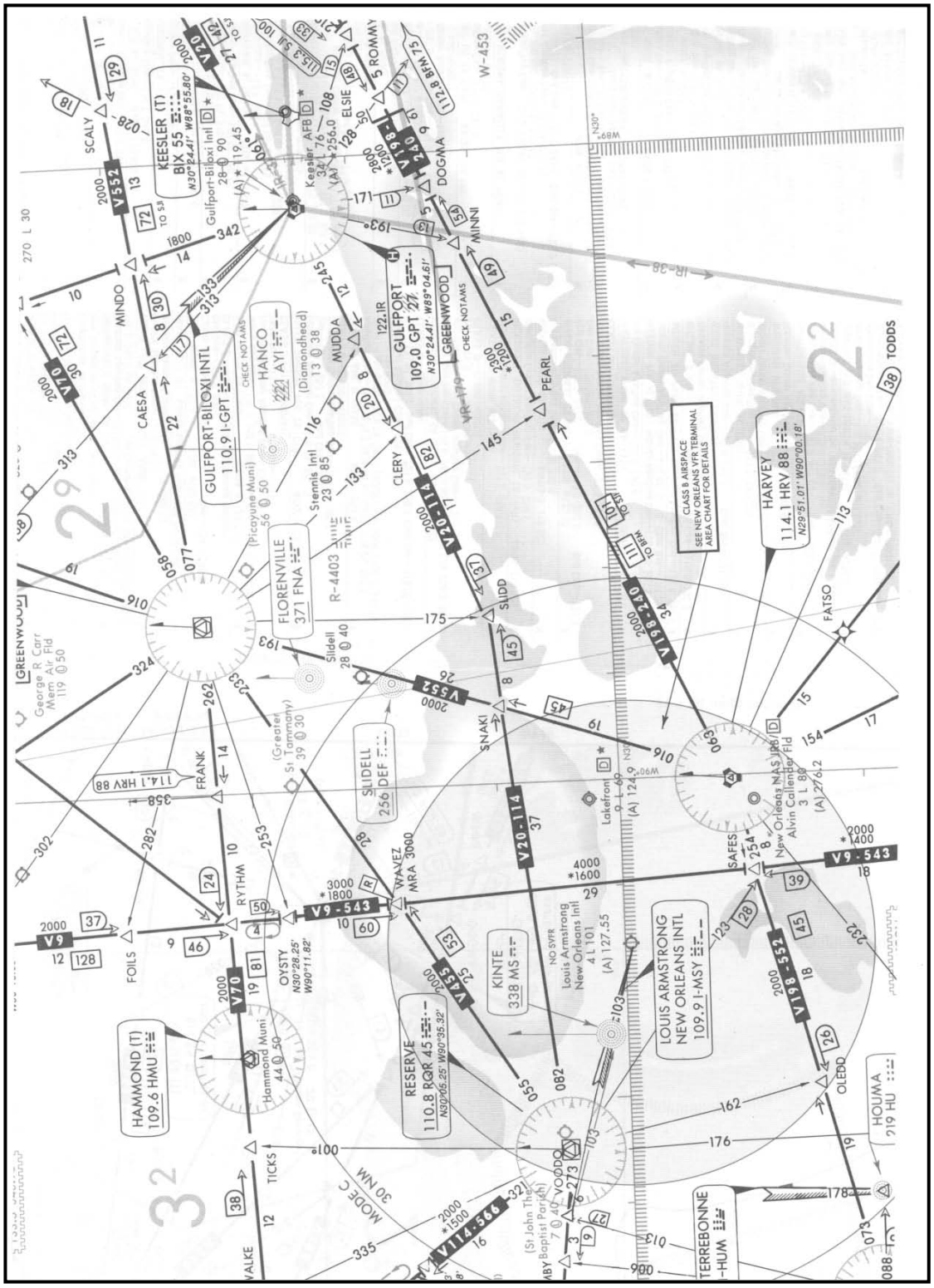

Figure 7–7 L-17D
Notice ILS "feather" at Gulfport and New Orleans

In order to arrive at the FAF on the Localizer approach, you will be required to fly some sort of course reversal (Procedure Turn, Holding Pattern, Teardrop), Arcing approach, Straight–in approach, or radar vectors to final. The procedures for these are just as you learned in RI Stage. However, when flying the Procedure Turn outbound portion of any ILS/LOC type approach, you will get reverse sensing. You must fly away from the CDI to return on course during that portion of the approach. Additionally, when flying a back course LOC approach, you will get reverse sensing inbound and correct sensing on the Procedure Turn outbound.

2. **Procedure** – Once cleared for the approach:

a. Fly the approach as depicted (i.e., Procedure Turn, Holding Pattern, Teardrop, etc.) or comply with the controller's instructions if being radar vectored to final approach course.

b. Once established inbound, comply with the remainder of the procedures from Section 623.

NOTES

1. Once established on the Localizer course, the VOR (tuned to the localizer frequency) should never be tuned to another NAVAID to identify the FAF. You must use either DME, the tail of the TACAN needle, or radar fixing to identify the FAF. The VOR/TACAN switch should never be moved from the VOR position. If the FAF cannot be identified by any of these methods, the Localizer approach will not be commenced.

2. Although the OBS knob will not affect CDI movement, it is a good technique to twist the final approach course in the IND–350. This will serve as a reminder during the approach and indicates the no–wind heading that will maintain course while tracking inbound.

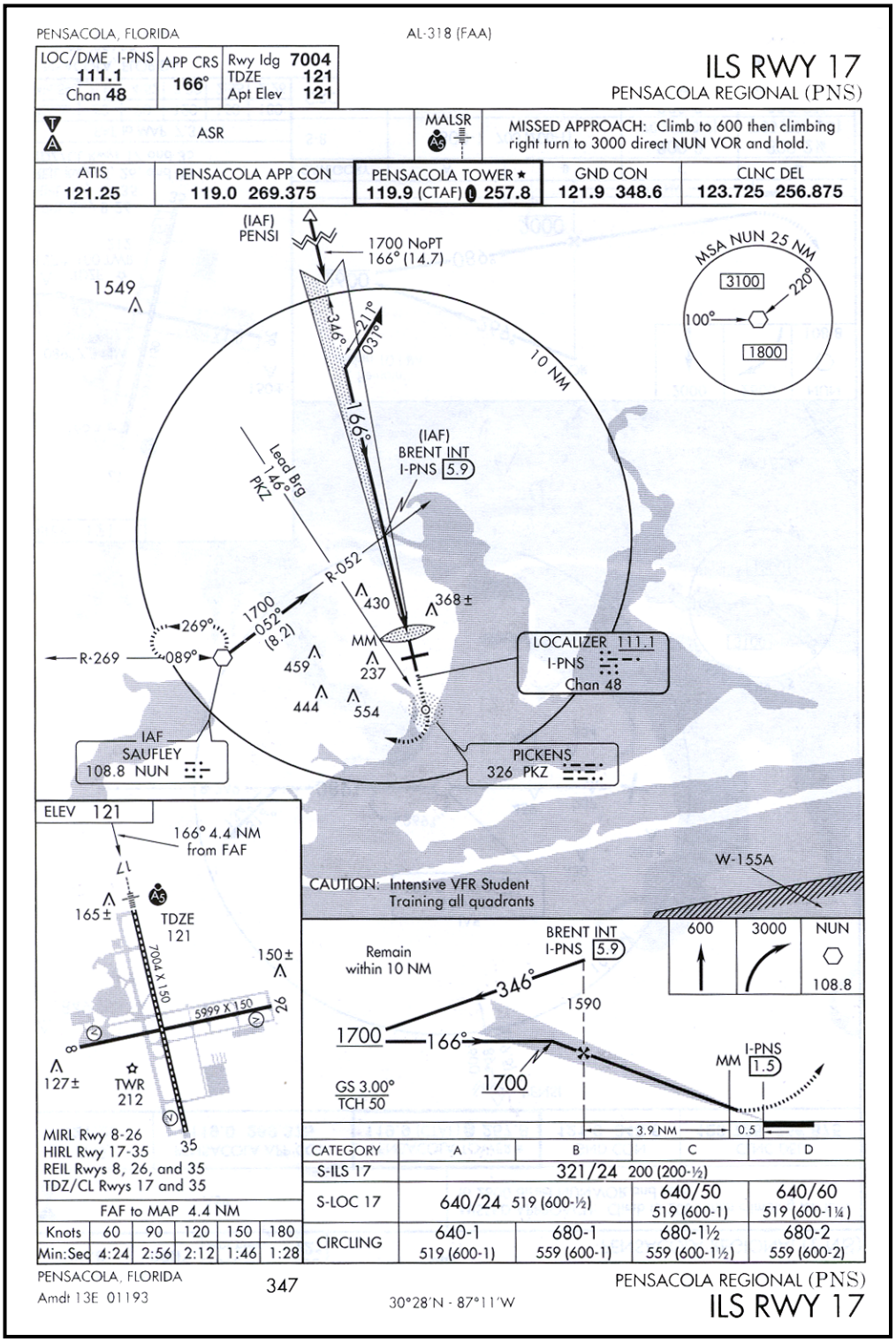

Figure 7–8 ILS RWY 17 (PNS)

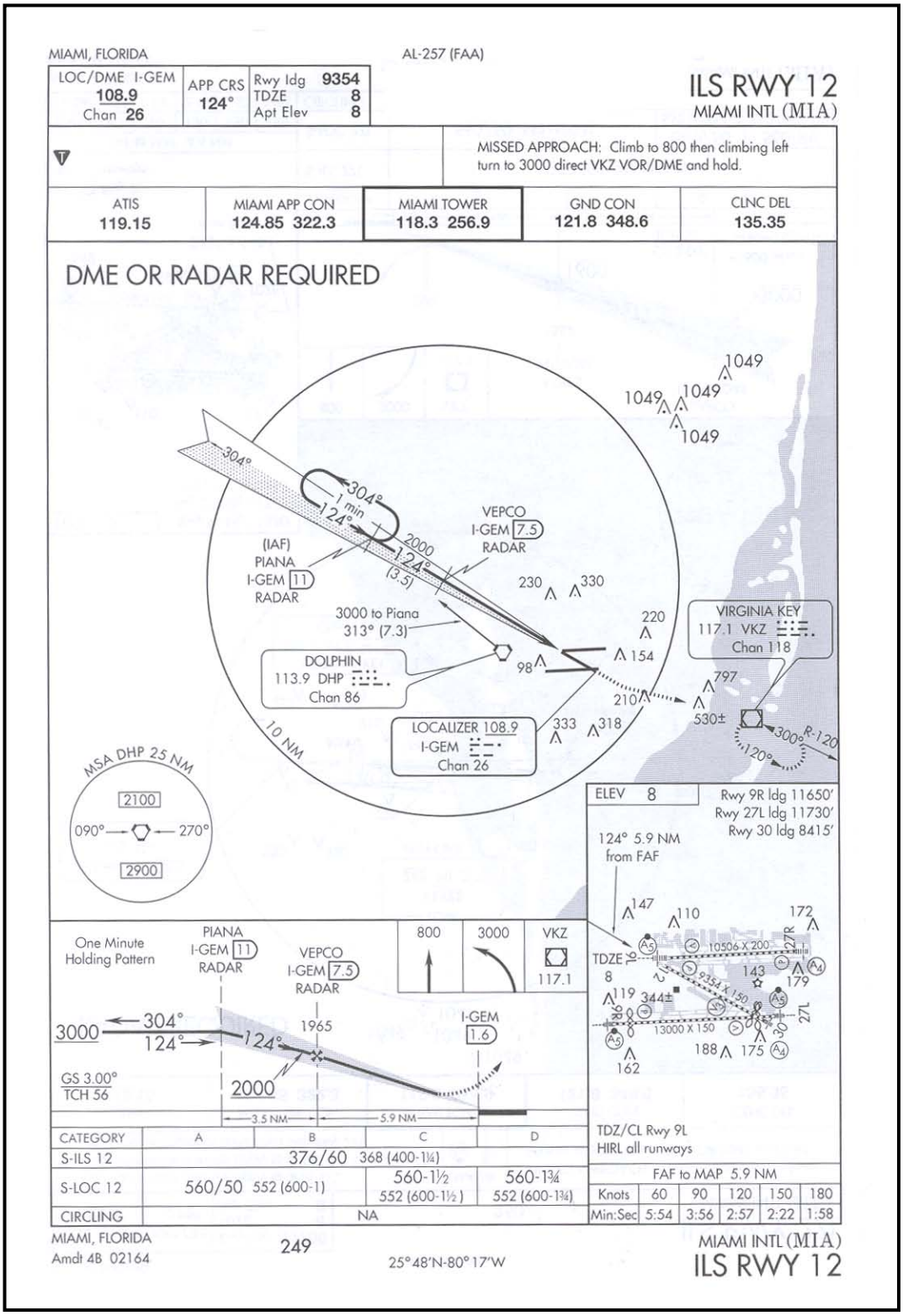

Figure 7–9 ILS RWY 12 (MIA)

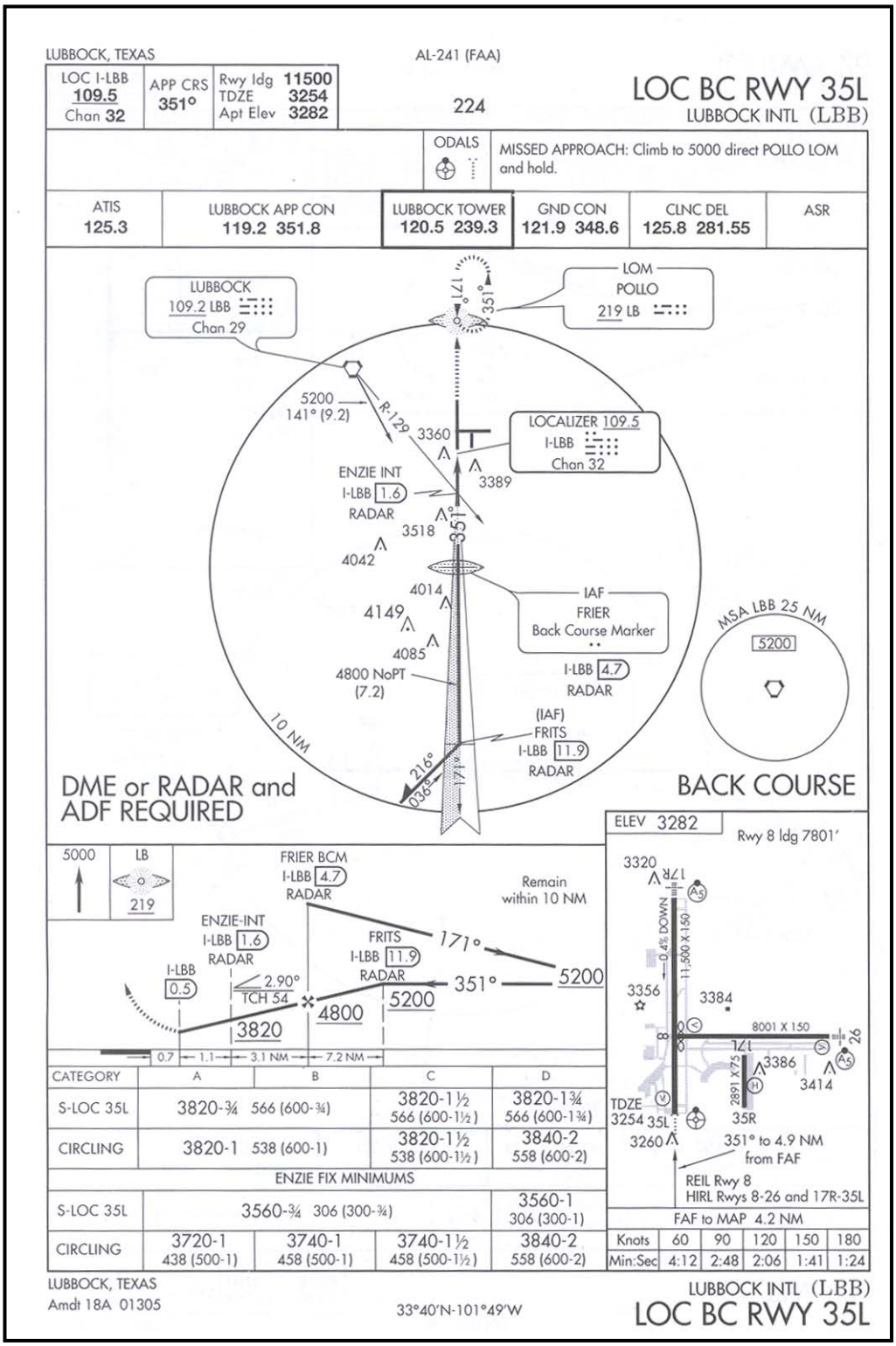

Figure 7–10 LOC BC RWY 35L (LBB)

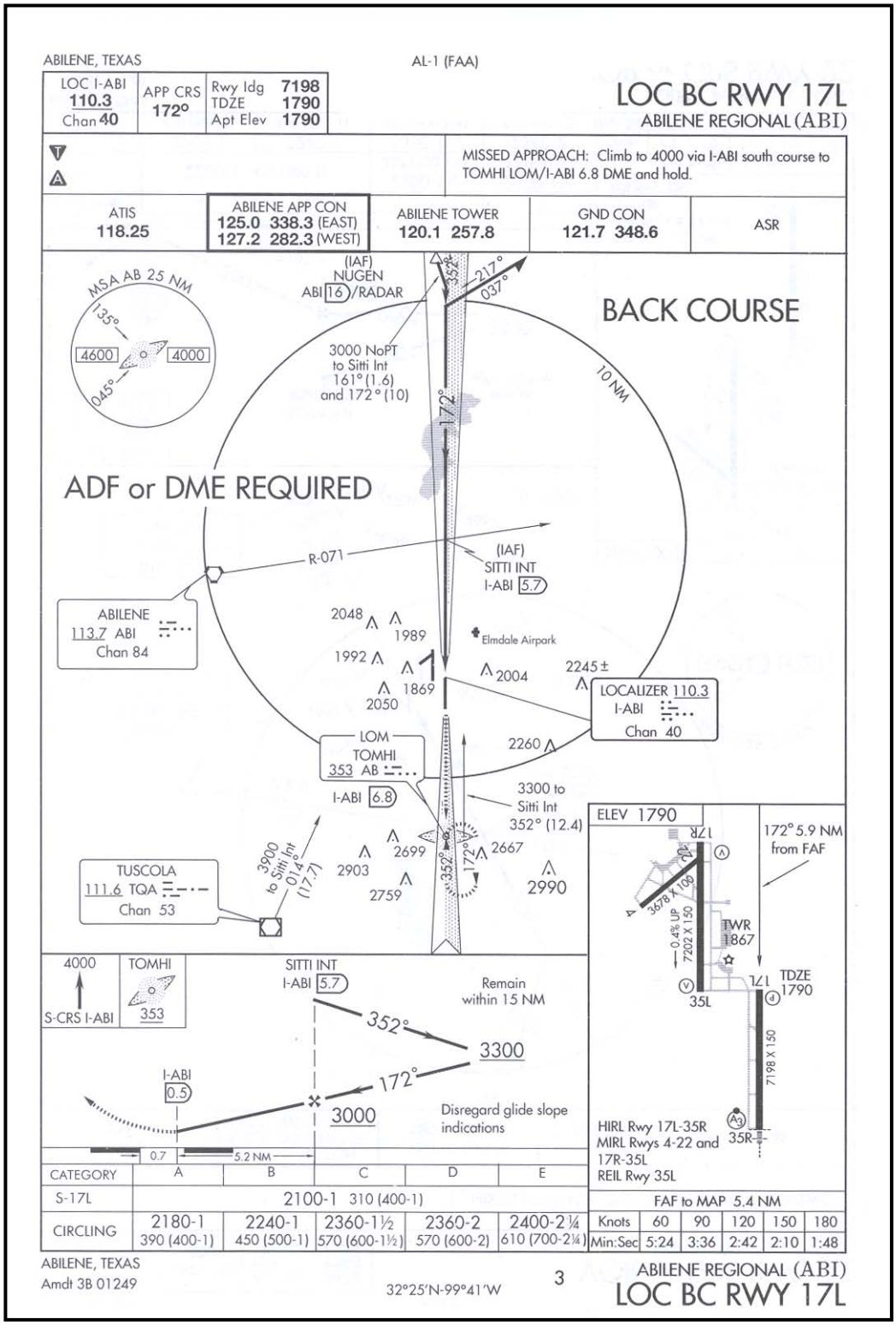

Figure 7–11 LOC BC RWY 17L (ABI)

707. TRANSITION TO VISUAL SEGMENT OF THE APPROACH

The transition to the visual segment on an instrument approach may begin at any point during the approach, once the field is in sight. If a VDP is depicted on the approach, you should not descend below the MDA prior to reaching the VDP.

1. Straight–In Approaches

On PAR, ASR, and Localizer approaches, the aircraft should be very close to being lined up on centerline when you gain visual reference with the runway environment. The transition in this case should be relatively simple. All that is normally required is a speed reduction while continuing the descent from the DH/MDA to intercept a normal visual glidepath. Comply with the minimum speed for the aircraft configuration until touchdown. On Non–precision approaches, you must also decide if flaps should be used.

On other types of Straight–in approaches (TAC/VOR), the final approach course may be as much as 30º off runway heading. For example, the TAC 14 to North Whiting has a FAC of 124º, while actual runway magnetic heading is 137.9º. In these cases, it will be necessary to continue on the final approach course until you can make a turn to line up on centerline. To avoid needing large heading corrections at low altitude, do not "angle in" toward the runway.

Some Non–precision approaches have MDAs of 800/1 or higher. At typical approach speeds in the T–34C (120 knots), this could require descent rates in excess of 1600 FPM if you do not break out prior to the MAP. In these cases, an aggressive power reduction, possibly idle power, may be required in which case a missed approach may be warranted. Typically, if you gain sight of the runway at the MAP itself, a safe landing is not possible. Remember, adjust nose attitude accordingly to maintain a safe speed. Try to dissipate excess altitude and airspeed as soon as possible so that you can arrest the resultant high sink rate prior to the landing threshold. Remember – just because the runway environment is in sight at the MAP does NOT mean a safe landing can be made. Both of these conditions must be met before attempting a landing from a Straight–in approach.

2. Circling Approaches

Circling approaches can present a very challenging situation. If the weather is at or near minimums, the circling maneuver may severely tax the pilot's ability. While you will attempt to fly the aircraft to a normal VFR checkpoint (i.e., 180, 90, final), it may not be possible. A thorough discussion of different types of maneuvers is discussed in Section 710.

Remember, a ¾ wingtip on downwind at 400 feet AGL (for example) will be much closer to the runway than at the normal VFR altitude of 800 feet AGL, and may not be a sufficient distance from the runway to allow a safe turn to final. There are no absolutes on Circling approaches; you must use good judgment to position the aircraft for landing.

3. Visual Approaches

When it will be operationally beneficial, ATC may authorize an aircraft to conduct a visual approach to an airport or to follow another aircraft when flight to, and landing at, the airport can be accomplished in VFR weather. Visual approaches are initiated by ATC to reduce pilot/controller workload and expedite arrivals by shortening flight paths to the airport. It is the pilot's responsibility to advise ATC as soon as possible if a visual approach is not desired. The pilot must have the airport or the identified preceding aircraft in sight before the clearance can be issued. If the pilot has the airport in sight but cannot see the aircraft he is following, ATC may still clear the aircraft for a visual approach, but ATC retains both separation and wake turbulence separation responsibility. When visually following a preceding aircraft, acceptance of the visual approach clearance constitutes acceptance of pilot responsibility for maintaining a safe approach interval and adequate wake turbulence separation.

708. CIRCLING MANEUVERS

Reference: AIM Section V, "Circling Minimums," NIFM Section 29, "The Circling Approach," FAA ATC Manual 7110, "Circling Approach."

NOTE

> Because of obstacles near the airport, a portion of the circling area may be restricted by a procedural note: i.e., "Circling NA E of RWY 17–35." It is the pilot's responsibility to review any circling restrictions for the intended airport. These restrictions can be found in the Approach Plates, AP1, IFR Supplement or current NOTAMs.

1. Circling Minimums

Published circling minimums provide a 300–foot obstacle clearance when pilots remain within the appropriate area of protection (Figure 7–12).

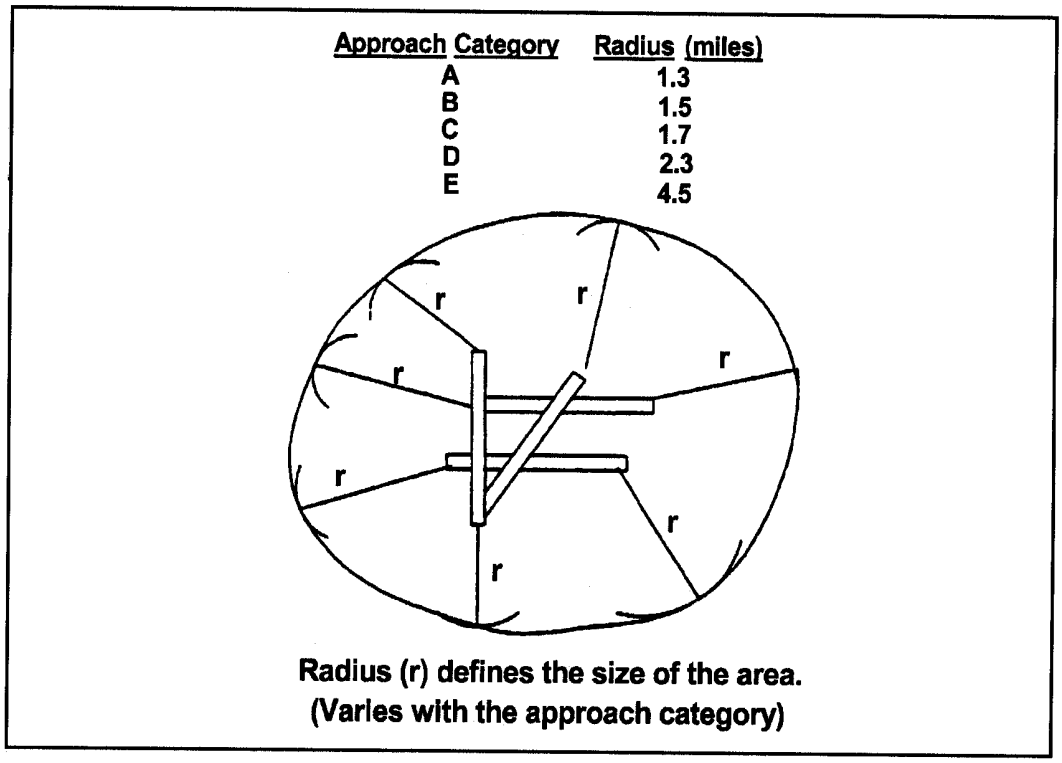

Figure 7–12 Circling Approach Area

Pilots should remain at or above the circling altitude until the aircraft is continuously in a position from which a descent to a landing on the intended runway can be made at a normal rate of descent using normal maneuvers. Circling may require maneuvering at low altitude, at low airspeed, and in marginal weather conditions. Pilots must use sound judgment, have an in–depth knowledge of their capabilities, and fully understand the aircraft performance to determine the exact circle maneuver to use. The pilot should brief division of responsibilities during circling maneuvers; the pilot keeps the runway in sight and the copilot monitors instruments, especially the altimeter.

2. Circling Maneuvers

Figure 7–13 illustrates suggested patterns that may be flown. Choose a pattern that best suits the situation.

In preparation for the circling maneuver, study the Aerodrome Data box on the instrument approach plate. The "inbound arrow" will display the track of the arriving aircraft in relation to the airport. This will help the pilot determine which circling maneuver may work best for landing on the intended runway.

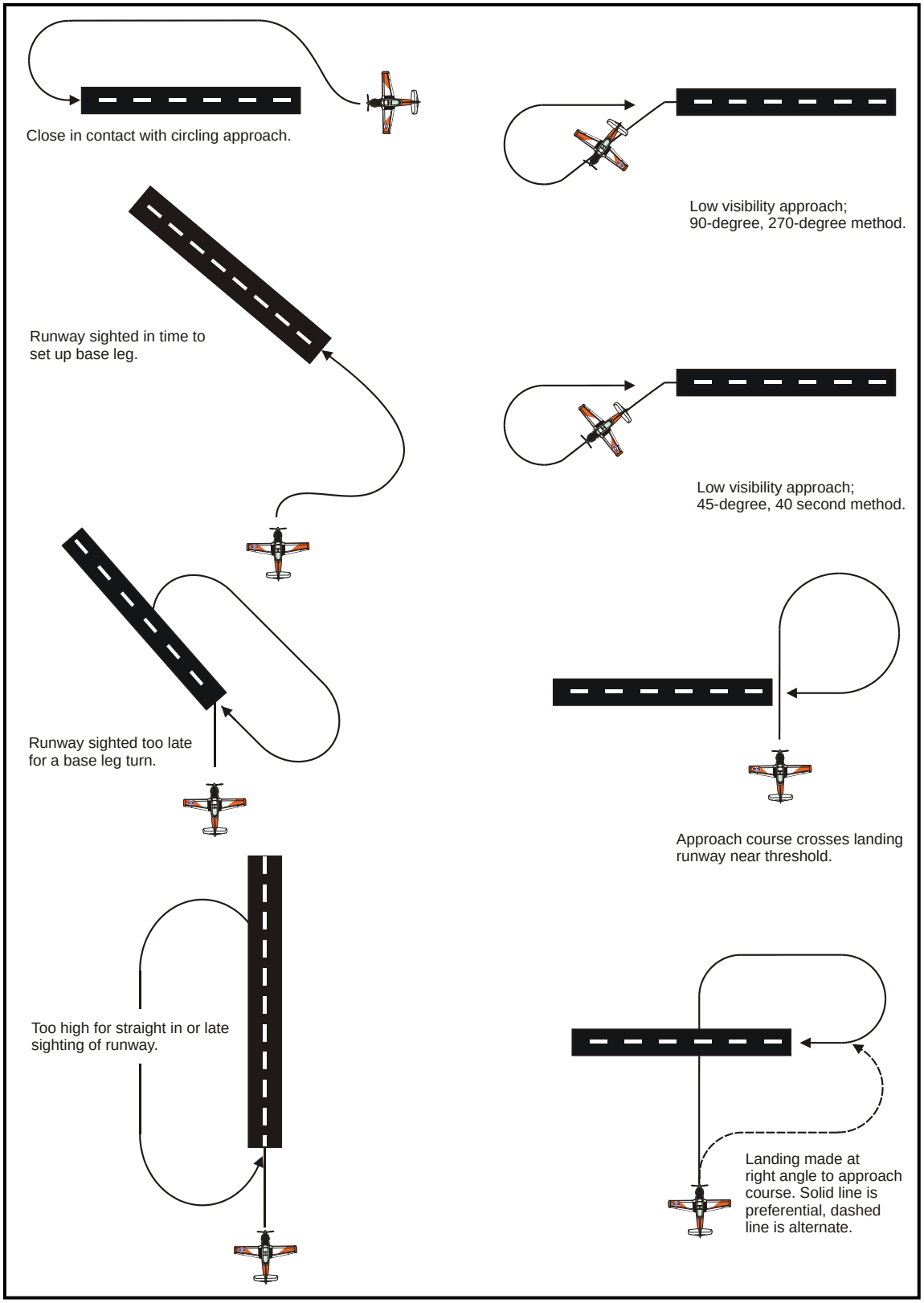

Figure 7–13 Circling Maneuvers

3. Missed Approach from a Circling Maneuver

If visual reference with any identifiable part of the airport is lost while circling to land from an instrument approach (unless the inability to see an identifiable part of the airport results only from a normal bank of the aircraft during the circling approach), the Missed Approach specified for that particular procedure must be followed (unless an alternate Missed Approach Procedure is specified by ATC).

To become established on the prescribed Missed Approach course, the pilot should make an initial climbing turn toward the landing runway and continue the turn until he/she is established on the Missed Approach course. Because there are many variations to the circle–to–land maneuver, different patterns may be required to become established on the prescribed Missed Approach course, depending on the aircraft position at the time and the time visual reference is lost (Figure 7–14).

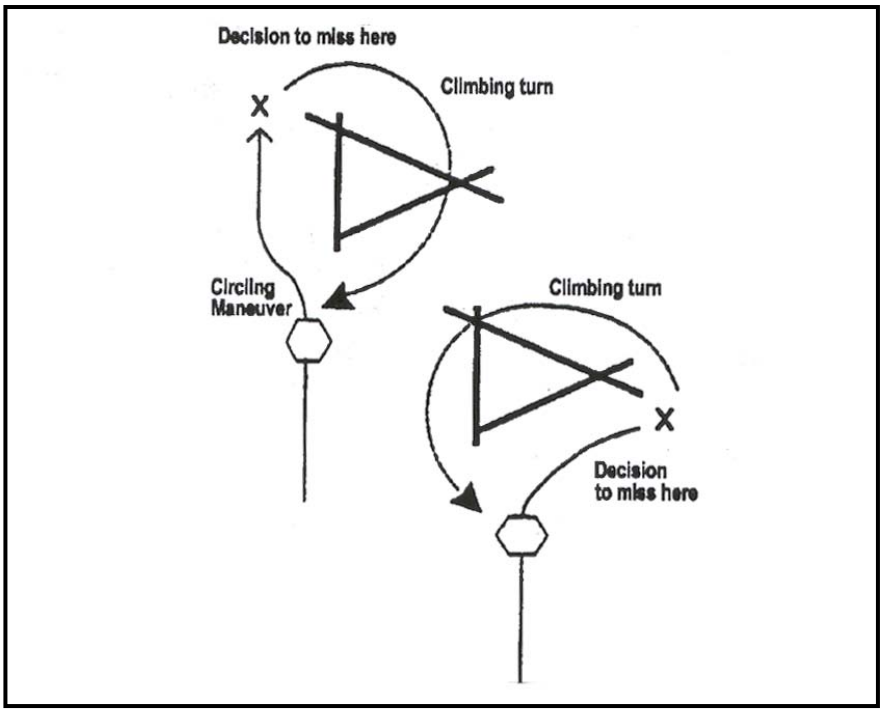

Figure 7–14 Missed Approach from a Circling Maneuver

Adherence to the procedure will assure that an aircraft will remain within the circling and missed approach obstruction clearance areas.

NOTE

At locations where ATC Radar Service is provided, the pilot should conform to radar vectors when provided by ATC in lieu of the published Missed Approach Procedure.

709. HIGH ALTITUDE APPROACH

Reference: NIFM, Chapter 29; AFM 51–37.

1. **Amplification**

   a. Instrument Approach Procedure (IAP) charts are divided into two categories: high altitude and low altitude. A high altitude instrument approach enables an aircraft to transition from the high altitude structure to a position on the final approach course for landing.

   b. High Altitude Instrument approaches are routinely executed by high performance military aircraft into military aerodromes for the following reasons: to maintain efficient fuel consumption, to maintain higher TAS, and to avoid low altitude weather until closer to the destination.

   c. The procedures used to execute a High Altitude Instrument approach combine the penetration pattern first learned in the Basic Instruments Stage with Instrument Approach Procedures learned in the Radio Instruments Stage (typically a Teardrop or Arcing approach). For this reason, High Altitude approaches normally require higher rates of descent and indicated airspeeds than Low Altitude approaches until the transition to BAC. Once the aircraft is in BAC, procedures for both High and Low Altitude Instrument approaches are the same.

2. **Procedure**

   a. Inbound to the IAF, complete the Penetration Checklist:

      i. Oxygen . . . 100%.

      ii. Fuel state . . . check.

      iii. Defog . . . as required.

   b. At the IAF, execute the 6 Ts:

      i. **TIME** – not required; time of commencing approach is not reported.

      ii. **TURN** – turn in the shortest direction to parallel the course.

NOTE

The penetration course is depicted on high altitude IAP charts by a bold–dotted track. Figure 7–15.

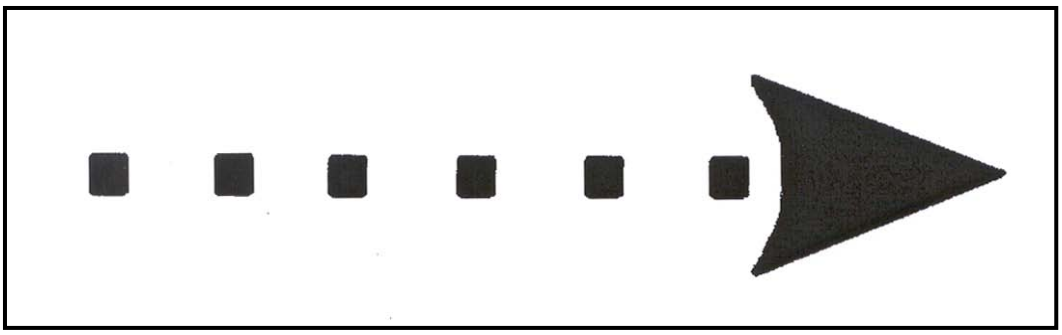

Figure 7–15 Penetration course

NOTE

The IAF may be approached from directions not favorable to intercepting the IAC. Apply the techniques for maneuvering airspace discussed in Chapter Six.

iii. **TIME** – as required.

iv. **TRANSITION** – Initiate the penetration by reducing power to idle while simultaneously lowering the nose to 13°–15° nose down. As the airspeed approaches 180 KIAS, trim the aircraft for a 180 KIAS descent (approximately 11°–13° nose down). The rate of descent will be approximately 4000 FPM.

v. **TWIST** – set the appropriate course in the IND–350 and establish an intercept heading.

vi. **TALK** – make the appropriate report if required.

c. Comply with all courses, altitudes, and DME restrictions. Lead level off from penetration by 1000 feet. Level segments of the penetration may be flown at fast cruise.

i. Teardrop Penetration

At one–half your initial altitude or at reaching the published penetration turn, fly the penetration turn in the published direction. A 30º AOB turn is normally used during the penetration. During the last half of the turn, note the position of the head of the needle:

If the head of the needle is not within 5º of the inbound course, stop the turn with a 45º intercept.

If the head of the needle is within 5º of the inbound course, continue the turn and roll out with a double–the–angle intercept.

ii. Penetration including an Arcing Maneuver

When turning 90º onto an arc from a radial using SRT, the amount of lead (in nautical miles) should be 0.5% of groundspeed. Do not exceed 30º AOB or SRT, whichever occurs first. For 180 KIAS, use 1.2 NM lead as an approximation since 30º AOB will give less than SRT.

NOTE

Some high altitude approach charts have penetration instructions printed in the profile view of the approach chart. Review and comply with all printed instructions.

d. Once established inbound, comply with the remainder of the Low Altitude Instrument Approach procedures (paragraph 623.)

NOTE

High altitude approach charts do not contain landing minimums for category B aircraft. T–34s should use category C minimums.

710. GPS PROCEDURES

Reference: AIM Chapter 1, KLN 900 Pilot's Guide, T-34C NATOPS

1. **Description.** The T-34C has a panel mounted KLN900 GPS system consisting of a sensor/navigation computer, a database card and an antenna. This system is used to conduct non-precision instrument approaches based on satellite transmitted positioning information.

2. **General.** Prior to conducting any GPS approach training it is essential that the student read the T-34C NATOPS section 19.8 (Global Positioning System) and be thoroughly familiar with the components and operation of the KLN900 system. The GPS is considered a supplemental navigation system and will not be used as a sole source of IFR navigation. All aircraft **SHALL** have a operable TACAN/VOR while conducting IFR operations. While the GPS system does provide the capability to conduct GPS Arcing approaches, GPS Standard Instrument Departure (SID) procedures and GPS STAR procedures they will not be studied in this phase of training. Student training will only be conducted utilizing radar vectors to the final portion of a stand-alone or overlay GPS approach.

NOTE

Students must be familiar with the Turn-on and Self-Test Page functions of the GPS at initial power up in order to verify correct initialization and position data.

There is important information to know when using the GPS for IFR navigation and instrument approaches. As a part of the system integrity, the GPS receiver monitors and predicts satellite orbital position and geometry. The process of monitoring and predicting satellite position is known as Receiver Autonomous Integrity Monitoring (RAIM). RAIM verifies the predicted orbital position of the satellite or satellites used for a particular approach matches the actual orbital position(s). If the positions do not match, the accuracy of the GPS position data may not meet non-precision approach requirements. In this case, the GPS receiver will generate a message notifying the pilot that GPS data should not be used for the approach. RAIM outages may occur due to an insufficient number of satellites, unsuitable satellite position, terrain masking, aircraft dynamics (changes in pitch or bank angle) or improper barometric altitude data input.

Prior to any IFR GPS operation, the pilot must check for planned GPS outages at the departure and destination airports by either calling an FSS preflight briefer or checking online NOTAM information using "KGPS" as the airfield identifier. The military provides airfield specific GPS RAIM (M-series) NOTAM's for non-precision approach procedures at military airfields. During longer flights, predictive RAIM at the destination should be checked manually by using the Status 5 (STA5) page of the KLN 900. This may provide early indications that an unscheduled satellite outage has occurred since takeoff. Predictive RAIM cannot account for terrain masking problems associated with flights in the vicinity of mountainous terrain, for unplanned satellite outages or for internal equipment malfunctions. Since the relative positions of the satellites are constantly changing, prior experience with the airport does not guarantee reception at all times, and RAIM availability should always be checked.

NOTE

For the purposed of alternate field selection a compatible and operational non-GPS approach SHALL exist at the alternate airport.

The Super NAV 5 page has been specifically designed to provide most of the functions needed for non-precision approaches. This page provides an interface that presents pertinent navigation information, a way to access the flight plan, and a graphic presentation of the present position relative to the flight plan waypoints. You will find this page to be very useful in conducting non-precision approaches. It can be accessed by selected the NAV 5 page on both the left and right side of the GPS console.

When conducting GPS approaches it is important to understand the differences between the OBS and LEG modes of operation of the KLN900. The OBS mode provides no automatic sequencing between waypoints. OBS mode only provides navigation to the active waypoint by way of the course dialed into the OBS knob below the CDI. When the GPS is in OBS mode, rotating the OBS knob will rotate the course select line, but will not change course select line when in LEG mode. LEG mode provides Automatic Waypoint Sequencing, navigation to the active waypoint via a direct routing from your present position and Turn Anticipation. When using Turn Anticipation, the waypoint (WPT) light will begin to flash 20 seconds prior to turn. When the light goes steady, begin the turn to the new course. This will be used when flying approaches or any time the WPT is a Fly-Over WPT. OBS mode is used when holding, conducting a procedure

turn outbound or when intercepting a final approach course via radar vectors. LEG mode is used when flying along a flight planned routing or along a final approach course where auto-sequencing of waypoints is required. An example of this is when given radar vectors to the FAF, select OBS mode on the GPS, select the FAF as the active waypoint, and set the initial approach segment course in the CDI. Once established on the inbound course and prior to the FAF, reselect LEG mode on the GPS.

3. GPS OVERLAY APPROACHES

Overlay approaches consist of GPS waypoints overlayed on conventional (VOR, VOR/DME etc…) non-precision approaches (i.e., VOR or GPS-A at CEW pg 6-49). Though overlays have the same minimums as the underlying approach, they offer the opportunity to fly an instrument approach procedure using GPS. Because GPS approaches are designed as a TO-TO system (meaning you navigate to one fix, cross it and proceed to the next fix), overlays are not a perfect fit with the underlying procedure. Some conventional approaches, for example, have no FAFs, so GPS would not be able to navigate to a fix, nor would it know when to switch the CDI sensitivity. This problem is solved by inserting synthetic, GPS-specific "sensor final approach fixes" on approach overlays when required. There are various GPS overlay approach fix naming standards involving characters and numbers. It is not critical that the student memorize the naming methods, however, it is important to recognize that the GPS database uses this protocol. Listed below are examples of GPS overlay fixes the student may see as they scroll through the fix list:

D006J_____A DME arc fix, with the "D" meaning DME, 006 the radial and "J" the distance, 10 miles (J is the 10th letter of the alphabet)

ORW19_____Along track fix at DME 19

FF142_____FAF on 142° course

MA142_____MAF on 142° course

RW14_____MAP, runway 14

CF151_____Capture or course fix on the 151° radial

If any of the above listed fixes are an actual five-letter named fix, they will have a dash and a small letter suffix at the end of the waypoint. These suffixes are intended to assist the pilot in recognizing certain points during the approach, and are visible on the FPL 0, Super NAV 5 and Super NAV 1 pages. The IAF is denoted by (-i), for example FREBY-i. The FAF is denoted by (-f), for example ELMOO-f. The MAP is denoted by (-m), for example MA25B-m. The missed approach holding point is denoted by (-h), for example FITON-h.

WARNINGS

1. GPS overlay approaches that contain final approach step-down fixes may not have corresponding waypoints in the associated GPS approach. It is the pilot's responsibility to identify these points relative to charted GPS waypoints.

2. The GPS always displays distance **to** the active waypoint, which is different than the DME distance **from** the NAVAID on the instrument approach procedure. **Pilots must exercise extreme caution to preclude either a dangerously early or late descent on final.**

4. GPS STAND-ALONE APPROACHES

The GPS stand-alone approach is commonly known as the terminal arrival area (TAA) or "Basic T" approach (Figure 7-16). The objective of the TAA is to provide a seamless transition from the enroute structure to the terminal environment for arriving aircraft equipped with GPS. GPS TAA approaches make use of both Fly-Over and Fly-By waypoints. Fly-By waypoints are used when an aircraft should begin a turn to the next course prior to reaching the waypoint separating the two route segments. This is known as turn anticipation and is compensated for in the airspace and terrain clearance. Approach waypoints, except for the missed approach waypoint (MAWP) are normally Fly-By waypoints. Fly-Over waypoints are used when the aircraft must fly over the waypoint prior to executing a turn. Approach charts depict Fly-Over waypoints with a circle around the waypoint.

The "T" design incorporates from one to three IAF's; an intermediate fix (IF) that serves as a dual purpose IF (IAF); a FAF, and a MAP usually located at the runway threshold. The three IAF's are normally aligned in a straight line perpendicular to the intermediate course, which is an extension of the final course leading to the runway, forming a "T." The standard TAA consists of three areas defined by the extension of the IAF legs and the intermediate segment course. These areas are called the straight-in, left-base, and right-base areas. TAA area lateral boundaries are identified by magnetic courses TO the IF (IAF).

The Terminal Arrival Approach procedure is a portion of the new and rapidly evolving GPS arrival procedure program. For the most current and in-depth information on the TAA approach, consult the AIM section 5-4-5.

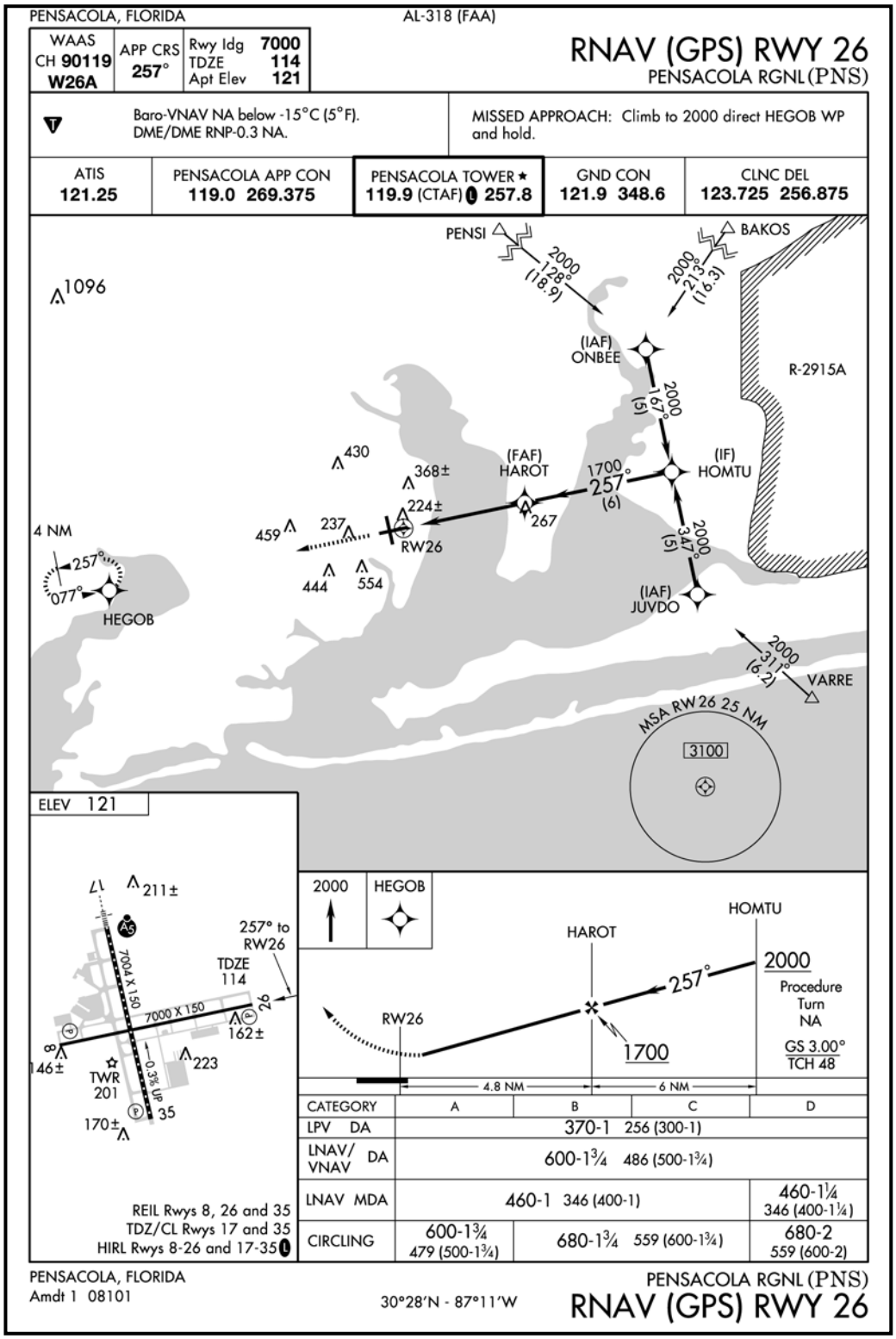

Figure 7-16 "T" Approach

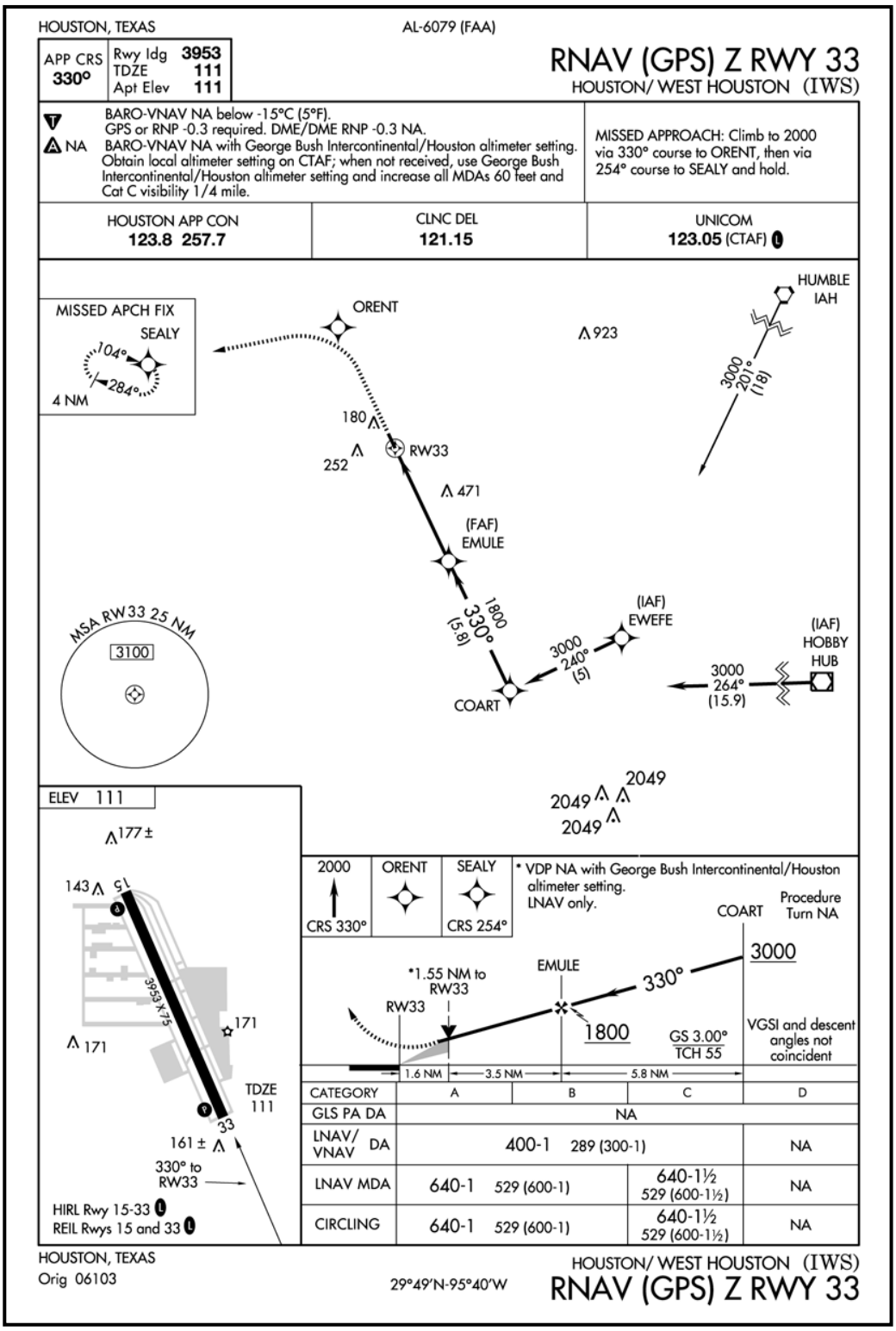

Figure 7-17 RNAV (GPS) Z RWY 33

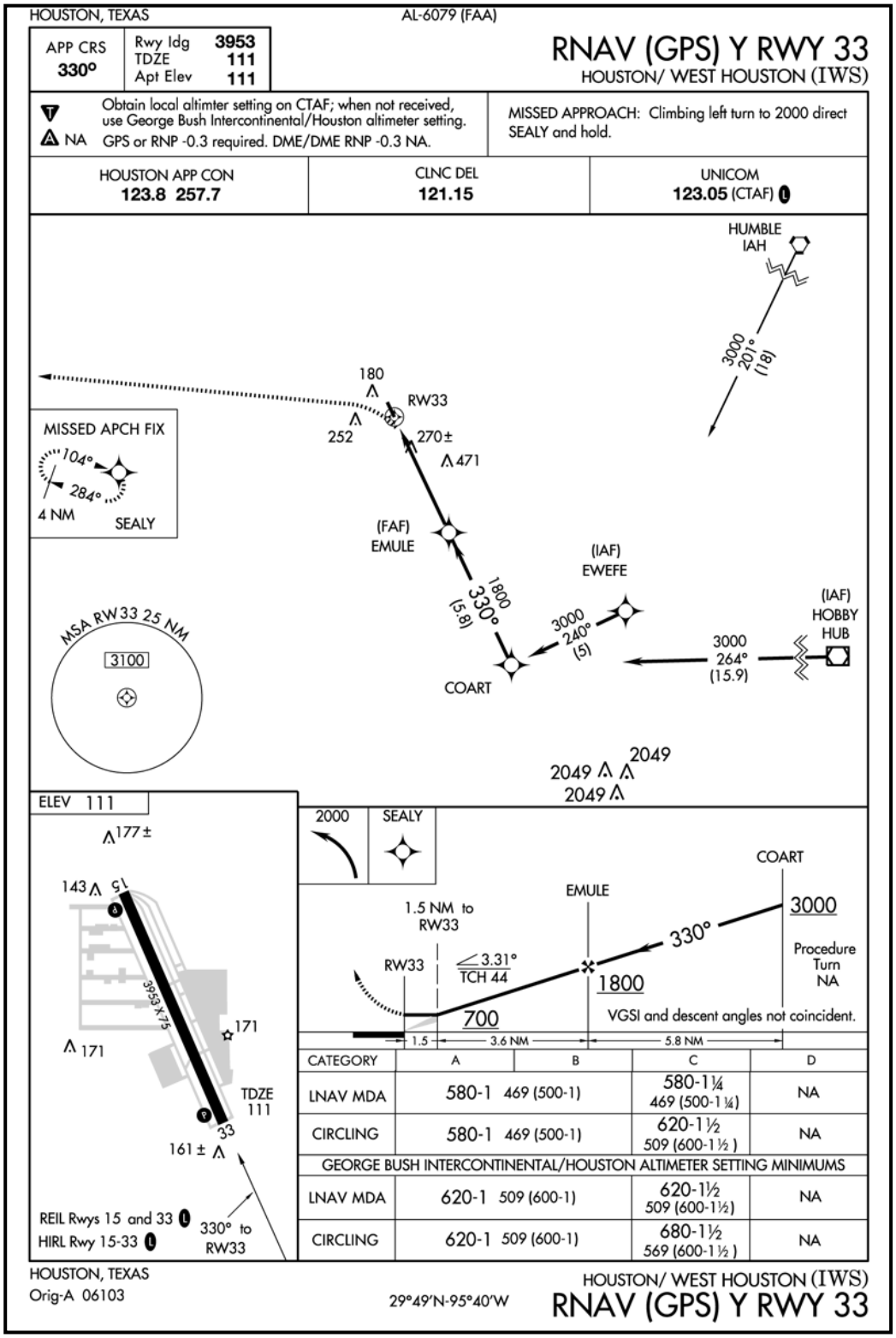

Figure 7-18 RNAV (GPS) Y RWY 33

5. REQUESTING GPS APPROACHES

Starting in February 2000, the FAA began the conversion of Published GPS approaches currently titled "GPS RWY XX" to the new RNAV (Area Navigation) plate entitled "RNAV RWY XX." Many aircraft, including the T-34C are not capable of conducting full RNAV precision approaches. In order to provide full utilization to all operators who have the GPS capability, the FAA has agreed to add "(GPS)" to the title of all RNAV procedures; e.g., "RNAV (GPS) RWY XX." Where multiple RNAV procedures exist to the same runway, subsequent RNAV procedure titles will be "RNAV (GPS) Z RWY 33,""RNAV (GPS) Y RWY 33," etc. (See Figures 7-17 and 7-18.)

Pilot/controller communications will not include the term "GPS" in describing an approach procedure, but will utilize current phraseology; i.e., "RNAV RWY 22," to describe these procedures. Multiple procedures will utilize phonetic ATC phraseology; e.g., "RNAV ZULU Runway 22." "RNAV YANKEE Runway 22." An ATC clearance for the RNAV procedure will authorize a T-34C pilot to utilize the LNAV MDA or Circling minima.

WARNING

In no case will pilots utilize the GLS PA or LNAV/VNAV decision altitudes. These are precision approach minima and not authorized for the T-34C.

During the interim period when existing GPS procedures are undergoing revision to the new title, both "RNAV (GPS)" and "GPS" approach charts will be published. Note, however, existing GPS procedures that incorporate a final approach step-down fix will not be included in the new naming convention, but will continue to be published as separate approach procedures; e.g., "GPS RWY 18."

6. SELECTING AND LOADING GPS NON-PRECISION APPROACHES

In order to use an approach, the approach must be loaded into the active flight plan. The APT 8 page is used to select approaches for the desired airport. The following example uses the VOR or GPS 25R approach to Los Angeles International Airport (KLAX) with the ELMOO IAF.

NOTE

The front unit must be on and functioning properly for either unit to be used for navigation. The last input from either cockpit has priority for system control.

WARNING

GPS non-precision approach procedures are safe for use only when a valid database is loaded and used before the expiration date. Use of out of date database information may cause navigation errors and hazards. Maintenance personnel use a PCMCIA card to periodically update the database.

a. Turn to any APT page and select KLAX.

b. Select APT 8 page.

c. Activate right cursor and position over desired approach (VOR 25R).

d. With flashing cursor over desired approach (VOR 25R), press ENT.

e. The GPS will now display available IAF's. Position cursor over ELMOO and press ENT.

NOTE

If only one IAF is available for the selected approach, the GPS will proceed from step d to step f.

f. The GPS will now display the waypoints, which comprise the approach. Review to verify correct approach is selected

g. Position cursor over LOAD IN FPL and press ENT. The GPS will check the active flight plan to verify that the airport, which corresponds to the selected approach, is in the active flight plan. If the airport is not in the active flight plan, the GPS will prompt PRESS ENT TO ADD KLAX AND APPR TO FPL 0 APPROVE? Press ENT to add approach and corresponding airport to the active flight plan.

h. The GPS will automatically sequence to the FPL 0 page and insert the approach waypoints in front of the airport waypoint

NOTES

1. Only one approach may be entered into FPL O (zero). Non-precision approaches are automatically deleted from the Flight Plan 0 page (active flight plan) in non-volatile memory 5 minutes after the GPS is turned off. Desired approaches must be loaded again to be used.

2. There are non-precision approaches which are not suited to the GPS operational characteristics and which are not included in the database. Verify the database contains desired approaches for desired airports prior to flight.

7. GENERAL PROCEDURE FOR GPS NON- PRECISION APPROACHES

In order to conduct an approach one must be loaded into the active flight plan. Approaches can only be entered in FPL 0, the active flight plan, and must be loaded prior to the final approach fix. As the aircraft flies towards the airfield, the "approach arm" mode is activated automatically at 30 NM. At that time, the CDI scale factor smoothly changes from the enroute mode of ± 5.0 (NM **not** degrees) to the terminal mode of ± 1.0 NM over a 30 second transition period. If the GPS APR switch is pressed when the aircraft is more than 30 NM from the airport, the approach arm mode is activated but the CDI scale remains ± 5 NM until the aircraft is within 30 NM of the airport. When the approach arm mode is activated the GPS will cue the pilot to press ALT to update the altimeter setting.

WARNING

Only the pilot with avionics command can adjust the course into the CDI and the information will be repeated in the non-avionics command cockpit CDI. Both cockpits can enter information into the GPS regardless of avionics command.

The most significant point to understand when using the GPS for non-precision approaches is the use of the OBS mode. When the GPS is in OBS mode, rotating the OBS knob will rotate the course select line on the GPS, but will not change course select line when in LEG mode. When given radar vectors to the FAF, select OBS mode on the GPS, select the FAF as the active waypoint, and set the initial approach segment course in the CDI. This will display the initial approach course through the FAF so that you can intercept it when being vectored to final. Once established on the inbound course and prior to the FAF, reselect LEG mode on the GPS. This will provide the automatic waypoint sequencing required for the approach mode to activate.

The "approach active" mode (indicated by the green ACTV light on the annunciator control panel) can only be activated by the GPS itself and occurs automatically when they aircraft is approximately 2 NM from the FAF with an approach loaded into the active flight plan. Additionally, the pilot must select LEG mode, adequate integrity monitoring must be available to complete the approach, RAIM must be available at the FAF and MAP, the aircraft must be heading towards the FAF and the FAF or co-located IAF/FAF must be the active waypoint. If any of these conditions are not met, and conditions do not change prior to the FAF, the GPS will not transition to approach active and a missed approach must be performed. Do not delay the switch from OBS to LEG mode. A late switch could inhibit the "approach active" mode or compress the scale factor change on the CDI/RMI. An abrupt scale factor change could be mistaken for actual deviations on final causing the pilot to make unnecessary corrections. Once in the approach active mode the CDI scale will change to ±0.3 NM. If the GPS APR switch is pressed when the GPS is in approach active mode, the GPS will deselect approach active and

return the system to approach arm mode and CDI scale to ±1 NM. Once past the FAF, it is not possible to return to the approach active mode without conducting a missed approach and flying back to the FAF.

WARNINGS

1. In no case will pilots fly the final approach segment using manual waypoint sequencing.

2. Use of the KLN900 may cause excessive "Heads-down" time. Aircrews must continue to maintain a vigilant "See and Avoid" doctrine while conducting GPS approaches in VMC.

3. On final, the CDI is the primary reference. The GPS needle points to the active waypoint and will rotate as the aircraft passes the waypoint.

If the receiver does not sequence into the approach mode or a RAIM failure/status annunciation occurs prior to the FAWP, the pilot should not descend to Minimum Descent Altitude (MDA), but should proceed to the MAWP via the FAWP, perform a missed approach, and contact ATC as soon as practical. If the RAIM flag/status annunciation appears after the FAWP, the missed approach should be executed immediately by climbing to the FAF altitude and flying along the final approach course to the MAWP and conduct the published missed approach procedure. Turns should not begin prior to the MAWP.

WARNING

The "PRESS GPS APR FOR NAV" message can appear after the NAV flag has been set due to a RAIM problem while the unit is in the approach mode. By pressing the GPS APR button, the unit will be able to restore navigation information so that you can conduct a missed approach based on navigation information provided by KLN900; otherwise, you will receive no useful information from the KLN900.

Once an approach has been added to the active flight plan, a new entry is placed following the missed approach point. The new line entry reads "NO WPT SEQ" and stands for no waypoint sequencing. Because many missed approach procedures require certain specific actions to be completed prior to proceeding to the missed approach holding point, the GPS will not automatically sequence past the MAP. To call up the missed approach procedure, press the "Direct To" button once past the MAP. The first waypoint in the missed approach procedure will be the active waypoint. To confirm the missed approach procedure waypoint, press "**ENT**". Always refer to the approach plate when conducting the missed approach and comply with the charted missed approach procedures. Missed approach routings in which the first track is via a course rather than direct to the next waypoint require additional action by the pilot to set the course. Being familiar with all of the inputs required is especially critical during this phase of flight. The OBS mode is usually needed at some point during a missed approach and is always required to fly the missed approach holding pattern.

8. **GPS (RVFAC) Procedures**

a. Select and load desired approach into the active flight plan (APT 8 page, right side).

b. Select cockpit navigation source to GPS.

c. Tune and ID all available ground based NAVAIDS for back up.

NOTE

The double RMI needle now provides information from the KLN 900, but the NACWS display continues to indicate DME from the selected TACAN or VOR/DME.

d. Brief the approach. If required, determine **step-down altitudes** using the profile view on the approach plate.

WARNING

The GPS always displays distance to **the active waypoint, which is different than the DME distance** from **the NAVAID on the instrument approach procedure.** Pilots must exercise extreme caution to preclude either a dangerously early or late descent on final. **DO NOT** confuse GPS distance with DME.

e. Verify APR ARM is annunciated within 30 NM of the airfield.

NOTE

The CDI scale factor will smoothly change for ± 5.0 NM to ± 1.0 NM full deflection at this time. The CDI scale is in NM not degrees.

f. Press ALT to verify the altimeter setting in the KLN900.

g. Once being vectored to final select OBS mode.

h. Select the FAWP as the Active WPT:

i. On the Flight Plan Page, use the CRSR to highlight the FAWP (WPT-f).

ii. Press "**DIRECT TO"** and confirm the selection by pressing **"ENT".**

iii. Select the SUPER NAV 5 display, set the scale to AUTO and verify the FAWP is the Active WPT indicated in the top left corner of the screen.

NOTE

If the FAWP is not the Active WPT, the pilot must cycle back to the FAWP and push "DIRECT" followed by "ENT".

i. Twist the IAC in the CDI. Verify the CDI's input to the KLN900 is correct on the GPS display.

NOTE

The KLN900 display should indicate a solid line through the FAWP oriented accurately to display the IAC and the aircraft's position relative to it.

j. On the vector to final (prior to 3 NM from the FAWP) select LEG mode.

k. Configure to BAC within 5 NM of the FAWP.

NOTE

Within the 2 NM gate, the KLN900 verifies the aircraft's heading, position and RAIM. If the parameters are met, the system "Activates" the approach and the CDI scale factor smoothly changes to ± 0.3 NM full deflection.

l. At the FAWP, conduct the 6 Ts and verify that there are three green GPS annunciator indications (GPS, ACTV and LEG). Ensure the FAC is twisted into the CDI after passing the FAWP.

NOTE

Upon arrival at the FAWP the GPS sequences the active waypoint to the MAWP in the procedure and indicates the final approach course in the data on the left side of the SUPER NAV 5 display.

m. Upon reaching the MAWP, if the runway is not insight or the aircraft is not in a position to make a safe landing, execute the Missed Approach Procedures.

NOTE

The GPS system will **NOT** automatically sequence to any waypoints required to execute the missed approach procedure. Automatic sequencing will cease at the MAP. If a missed approach is required, the pilot must manually sequence the system to the missed approach WPT.

n. Press the **"DIRECT TO"** key followed by the **"ENTER"** key, and verify the default WPT is the missed approach WPT defined in the procedure. Remain in LEG mode for direct to the WPT.

NOTE

If the MAHP is the NAVAID and is also the IAF/FAF, it is recommended to comply with the MAP and then go **Direct to** the MAHP once the aircraft is headed towards the WPT. If you go **Direct to** soon and the aircraft is near the NAVAID it may cycle between the IAF/FAF and not provide guidance to the MAHP.

9. GPS PROCEDURE TURN

If a procedure turn is required prior to executing the final approach segment the pilot must consider whether the approach has a co-located initial and final approach fix (IAF/FAF) or not. If an approach has a co-located IAF/FAF and requires a course reversal (procedure turn) then OBS mode must be selected just prior to executing the outbound leg. Selecting OBS mode disables automatic waypoint sequencing and allows the inbound course to be dialed into the CDI so that it can be intercepted on the procedure turn inbound. If the pilot does not select the OBS mode the GPS will automatically sequence to the MAWP at the co-located IAF/FAF. On the procedure turn outbound ensure the IAF/FAF is still the active waypoint, dial the inbound course into the CDI, and complete the procedure turn. Once established on the inbound course, select LEG mode to enable automatic waypoint sequencing. When the IAF and FAF are the same waypoint, the FAF is automatically made the active waypoint when LEG mode is selected. Be sure to allow sufficient distance to have a minimum of 3 NM to the FAF prior to selecting LEG mode so that the GPS will transition to the ACTIVE mode when conditions permit.

For procedure turn approaches where the IAF and FAF are not co-located, the IAF must be over-flown to allow the GPS to sequence to the FAF automatically. In this case, if OBS is selected prior to the IAF then automatic waypoint sequencing would be disabled and the FAF would have to be manually selected as the active waypoint. Therefore, only select the OBS mode once past the IAF instead of just prior to it. Complete the procedure turn outbound in OBS mode, confirm the FAF is the active waypoint and dial the inbound course into the CDI. As before, select LEG mode at a minimum distance of 3NM from the FAF once established on final.

In the case that a no procedure turn (NoPT) route segment is flown it must be done in LEG mode. OBS mode is not required for NoPT routings. There are no course reversals in this instance so there's no need to interrupt auto-sequencing. The IAF must, however, be over-flown so that the FAF sequences automatically to the active waypoint. Once established on a final course to the FAF the approach procedures remain the same as in RVFAC.

10. GPS Procedure-Turn Procedures

a. Select and load desired approach into the active flight plan. (APT 8 page, right side)

b. Select cockpit navigation source to GPS.

c. Tune and ID all available ground based NAVAIDS for back up.

NOTE

The double RMI needle now provides information from the KLN 900, but the NACWS display continues to indicate DME from the selected TACAN or VOR/DME.

d. Brief the approach. If required determine **step-down altitudes** using the profile view on the approach plate.

WARNING

The GPS always displays distance to **the active waypoint, which is different than the DME distance** from **the navaid on the instrument approach procedure.** Pilots must exercise extreme caution to preclude either a dangerously early or late descent on final. **DO NOT** confuse GPS distance with DME.

e. Verify APR ARM is annunciated within 30 NM of the airfield.

NOTE

The CDI scale factor will smoothly change for ± 5.0NM to ± 1.0 NM full deflection at this time. The CDI scale is in NM not degrees.

f. Press ALT to verify the altimeter setting in the KLN 900.

g. Select OBS mode prior to IAF if IAF/FAF are co-located **OR** after if IAF/FAF are not co-located.

NOTE

The pilot must be familiar with the OBS/LEG function to determine the appropriate position to select either function. Step g will be correct for most approaches, but the pilot must ensure the correct OBS/LEG function will be selected depending upon the IAF/FAF position.

h. At IAF perform 6 Ts.

i. At the end of the 2-minute outbound timing, execute the 45/180, course reversal.

NOTE

Ensure the procedure turn is completed more then 3 NM from FAWP or the KLN900 may not go ACTV if you are inside 2 NM from FAWP inbound.

j. Once established with a intercept towards the inbound course.

i. Select Leg mode prior to 3 NM from the FAWP.

ii. Twist the FAC in the CDI.

iii. Configure to BAC.

iv. Ensure the FAWP is the active WPT.

k. Select the SUPER NAV 5 display, set the scale to AUTO and verify the FAWP is the active WPT indicated in the top left corner of the screen.

NOTES

1. The KNL900 display should indicate a solid line through the FAWP orientated accurately to display the FAC and the aircraft's position relative to it.

2. If the FAWP is not the Active WPT, the pilot must cycle back to the FAWP and push "**DIRECT TO**" followed by "**ENT**".

3. Within the 2 NM gate, the KLN900 verifies the aircraft's heading, position and RAIM. If the parameters are met, the system "Activates" the approach and the CDI scale factor smoothly changes to ± 0.3 NM full deflection.

l. At the FAWP, conduct the 6Ts and verify there are 3 green GPS annunciator indications (GPS, ACTV, and LEG).

NOTE

Upon arrival at the FAWP, the GPS sequences the active waypoint to the MAWP in the procedure and indicates the FAC in the data on the left side of the SUPER NAV 5 display.

m. Upon reaching the MAWP, if the runway is not insight or the aircraft is not in a position to make a safe landing, execute the MAP.

NOTE

GPS system will **NOT** sequence to any waypoints required to execute the missed approach procedure. Automatic sequencing will cease at the MAP. If a missed approach is required, the pilot must manually sequence the system to the missed approach WPT.

n. Press the **"DIRECT TO"** key followed by the **"ENTER"** key, and verify the default WPT is the missed approach WPT defined in the procedure. Remain in LEG mode for direct to the WPT.

11. GPS HOLDING

Once cleared to a holding fix, use the "DIRECT TO" function of the GPS to highlight, select and enter the holding fix as the active waypoint in the active flight plan (FPL 0.) Select LEG mode and proceed direct to the fix. The LEG mode provides the direct course routing to the active waypoint from the aircraft's present position at the time the "DIRECT TO" function was initiated.

Just prior to arriving at the holding fix, select OBS mode and dial in the holding course. Once at the holding fix, enter the holding pattern using normal entry procedures. Ensure the holding fix is still the active waypoint. If not, select (from FPL 0) and re-enter the holding fix as the active waypoint. Selection of OBS mode prior to arriving at the holding fix is necessary in order to disable automatic waypoint sequencing. The selection of OBS mode also allows the pilot (**possessing avionics command and having GPS selected**) to dial in the holding course using the OBS knob on the CDI. The holding course is best visible on the SUPER NAV 5 page and it is recommended that the holding pattern be conducted with this page displayed on the GPS and the automatic range scale feature activated.

12. GPS HOLDING PROCEDURES

a. Select cockpit navigation source to GPS.

b. Ensure the holding fix is the active WPT.

i. Select LEG mode enroute to the Holding Fix.

ii. Select OBS mode just prior to the Holding Fix and dial the CDI to the course that was given in the LEG mode. This will give a direct course to the holding WPT.

c. Determine direction for entry using Standard Holding or Non-Standard holding entry procedures.

d. At the Holding Fix conduct 6 Ts. Standard-rate turns will be used while in holding.

NOTES

1. Timing or GPS distance may be used for leg lengths depending on the type of holding that is depicted. If using GPS Distance for leg lengths **DO NOT** confuse TACAN DME or VOR/ DME for GPS Distance.

2. When you rotate the CDI to the desired inbound course, the new course will be displayed as a line through the Holding Fix on the KLN 900 screen.

e. At the completion of the outbound leg timing or at a specified GPS distance, turn towards the holding course to intercept the holding course inbound. (**TAIL-RADIAL-TURN)**

NOTE

With the GPS in the OBS mode for holding, the double needle on the RMI functions like a VOR needle. The holding fix is a simulated NAVAID and theTail/Head of the needle will provide simulated radial indications.

f. Upon reaching the Holding Fix for the second time conduct No-Wind orbit.

g. Roll out of the turn on the outbound heading to parallel the holding course. This heading will be the same as the reciprocal of the holding course.

h. At the completion of the outbound leg timing or GPS distance turn towards the holding course. (**TAIL-RADIAL-TURN**)

i. At wings level begin timing if required and determine the wind direction (**TAIL-RADIAL-WIND**) and the number of degrees off the holding course. Set up intercept for the holding course.

j. Upon reaching the Holding Fix for the third time determine the following:

i. Timing corrections if required. (Headwind/Tailwind)

ii. Number of degrees to correct for the crosswind. For every degree off the holding course use the same amount into the wind for a correction factor while outbound. Use 1/3 of the correction factor while inbound to the Holding Fix.

k. All following orbits will be correction orbits using the same procedures.

l. Confirm expected further clearance time with approach control at least five minutes prior to EFC.

m. Follow approach control instructions once cleared out of holding.

13. GPS ARCING

Arcing procedures will only be encountered with overlay approaches but it must be noted that DME arcing procedures flown with the GPS are significantly different than traditional VOR/TACAN arcing approaches. DME arcing approaches are flown in the LEG mode. Selecting an approach with an arc segment will result in IAF's being displayed that are not intuitively obvious. An example is the IAF D220L. In this case, the D stands for DME arc, 220 is the radial the waypoint lies on, and L indicates the distance of the arc. L is the 12th letter of the alphabet and indicates a 12 DME arc. Once an IAF is selected for an arcing approach, the GPS

determines which radial of the reference VOR the aircraft is presently located on. A waypoint is created and located at the intersection of the present radial and the DME arc. This waypoint is then loaded into the approach with the nomenclature described above. The GPS does not, however, take into account the geometry of the active flight plan when determining the arc intercept point. This point is defined solely on the present radial and the defined arc distance from the reference NAVAID. For this reason, it is better to delay selecting DME arcing approaches until the aircraft is closer to the destination. Once the arc is selected, the SUPER NAV 5 page can be used to display it.

Once established on the arc, the CDI will display left/right guidance relative to the curved arc. Note the distance to the active waypoint is the distance from the present position to the active waypoint, not the distance along the arc. The GPS displays ARC XXX (the XXX will be the radial from the reference NAVAID the aircraft is presently on) in the bottom line of the SUPER NAV 5 page. This is important to note if there are any step down altitudes on the arc defined by a radial passage. Once established on a final course to the FAF the approach procedures remain the same as in RVFAC.

NOTE

If the aircraft is on the arc the CDI will be centered. The GPS needle will point to the next WPT not the NAVAID. Use the CDI to stay on the arc.

14. **GPS ARCING APPROACH**

a. Select and load desired approach into the active flight plan. (APT 8 page, right side).

NOTE

The GPS will pick the closest point on the arc to intercept, which may not be the IAF the pilot selects. Look at the active WPT.

b. Select cockpit navigation source to GPS.

c. Tune and ID all available ground based NAVAIDS for back up.

NOTE

The double RMI needle now provides information from the KLN 900, but the NACWS display continues to indicate DME from the selected TACAN or VOR/DME.

d. Brief the approach. If required determine **step-down altitudes** using the profile view on the approach plate.

WARNING

The GPS always displays distance to **the active waypoint, which is different than the DME distance** from **the NAVAID on the instrument approach procedure.** Pilots must exercise extreme caution to preclude either a dangerously early or late descent on final. **DO NOT** confuse GPS distance with DME.

e. Verify APR ARM is annunciated within 30 NM of the airfield.

f. Select the SUPER NAV 5 display set the scale to AUTO.

NOTE

The CDI scale factor will smoothly change for ± 5.0NM to ± 1.0 NM full deflection at this time. The CDI scale is in nautical miles not degrees.

g. Press ALT to verify the altimeter setting in the KLN 900.

h. Select **LEG** mode prior to IAF.

i. At IAF perform 6 Ts.

j. Once established on the arc:

i. Twist in the Desired Track from the GPS into the CDI.

ii. The Active WPT will now be the point at the end of the arc. This is where the GPS needle will be pointing.

iii. Configure to BAC 5 NM prior to FAWP.

NOTE

If the aircraft is on the arc the CDI will be centered. The GPS needle will point to the next WPT not the NAVAID. **Use the CDI to stay on the arc.** The desired track will be located in the bottom left corner of the GPS in SUPER NAV 5.

k. Once on the FAC ensure the Active WPT is the FAWP.

NOTES

1. The KNL900 display should indicate a solid line through the FAWP orientated accurately to display the FAC and the aircraft's position relative to it.

2. If the FAWP is not the Active WPT, the pilot must cycle back to the FAWP and push "**DIRECT TO**" followed by "**ENT**".

3. Within the 2 NM gate, the KLN900 verifies the aircraft's heading, position and RAIM. If the parameters are met, the system "Activates" the approach and the CDI scale factor smoothly changes to ± 0.3 NM full deflection.

l. At the FAWP, conduct the 6Ts and verify that there are 3 green GPS annunciator indications (GPS, ACTV and LEG).

NOTE

Upon arrival at the FAWP, the GPS sequences the active waypoint to the MAWP in the procedure and indicates the FAC in the data on the left side of the SUPER NAV 5 display.

m. Upon reaching the MAWP, if the runway is not insight or the aircraft is not in a position to make a safe landing, execute the Missed Approach Procedure.

NOTE

The GPS system will **NOT** sequence to any waypoints required to execute the missed approach procedure. Automatic sequencing will cease at the MAP. If a missed approach is required, the pilot must manually sequence the system to the missed approach WPT.

n. Press the **"DIRECT TO"** key followed by the **"ENTER"** key, and verify the default WPT is the missed approach WPT defined in the procedure. Remain in LEG mode for direct to the WPT.

15. GPS DP and STAR

The GPS database includes DPs and STARs that can be accessed through the APT 7 page for the corresponding airports. A through review of the procedures will be required before attempting a DP or STAR. Review pages 19-42 to 19-44 in the T-34C NATOPS and pages 6-21 to 6-26 in the KLN 900 Pilot's Guide.

CHAPTER EIGHT
CROSS–COUNTRY PLANNING

800. INTRODUCTION

Many students will be afforded the opportunity to go cross–country during Instrument Navigation training. This can be one of the more enlightening and enjoyable aspects of training. During cross–country planning and execution, you will acquire a more thorough and accurate picture of Instrument Navigation Procedures in the "real world." No longer will you practice separate and distinct maneuvers. Instead, you will perform maneuvers in logical sequence taking you through the departure, enroute and terminal phases of your flight.

On a cross–country, you will file and fly an IFR flight plan to a field outside the local area. You will probably make an intermediate stop enroute to your final destination and remain overnight at that destination. The return flight to homefield will often complete this stage of your training.

The types of flights you are scheduled for will, of course, be dependent on the desires of your instructor, current policies of your command, and direction of higher authority.

The Flight Procedures you employ during cross–country are the same ones you learned in previous Instrument blocks and technically speaking there are no "new" maneuvers. However, the environment in which you operate might be somewhat unfamiliar. You will be flying out of the local area, you may utilize the high altitude structure, you might be operating out of a civil field with a military tenant, etc. As you can see, although there are no new maneuvers, things will still be different.

The Flight Procedures section will address some of the more significant differences.

801. FLIGHT PROCEDURES

1. **Fuel Packets** – Prior to departing on a cross–country or "out–and–in," pick up a fuel packet. Your instructor will normally assign you this task. In the fuel packet is a "jet fuel identiplate," used to pay for fuel at military bases. There is also a civilian credit card to purchase fuel from contract fuel suppliers at civilian fields. Also included in the fuel packet are various government forms that can be utilized for maintenance services and other bona fide official business expenses.

At the completion of your flight, be sure to turn in your fuel packet with receipts.

2. **FLIP Publications** – Make sure you bring the necessary FLIP publications to cover your entire route of flight and any possible contingencies. Possible considerations include, but are not limited to, low and high altitude enroute charts, high and low altitude approach plates, the IFR Supplement, SID/STARs and area charts. Consult with your instructor to determine necessary pubs. Check all pubs to ensure they will be current for the period during which you will be enroute. It is possible that you could take off on a three–day cross–country and have some of your pubs expire at the end of the first or second day. It should be obvious, but ensure you have at least one NATOPS Manual, and a Pocket Checklist for each pilot.

3. **Route of Flight** – This will probably be the first time you fly a significant distance from homefield. No longer will you be operating in an area where you are familiar with area landmarks, suitable fields, radio and NAVAID frequencies, etc.

a. Mark your route of flight on your navigational charts. Note suitable emergency or divert fields near your route.

b. Be aware of which VORs along your route have voice capability in the event you lose both your UHF and VHF radios. Approach may attempt to contact you via a voice capable VOR. Additionally, certain VORs conduct scheduled weather broadcasts. Utilize these to update and verify your formal weather briefing.

c. **Jet logs** – Prepare a complete and accurate jet log for all portions of your flight. Check with your instructor to determine if he desires a copy for his own personal use. During flight, compare estimated values for times, groundspeed, fuel flow, etc. with the actual values you observe. Modify your jet log as necessary.

4. **PPR** – To land, refuel or remain overnight at certain fields, prior arrangements must be made. This will be indicated in the IFR supplement (or AP1) in the aerodrome remarks section. If permission is required, you will see a reference to PPR, which indicates "prior permission required." Assist your instructor as directed in securing this permission. Base Operations at your destination field is normally your point of contact for obtaining permission.

5. **Operations from Non–military Fields** – During your cross–country, you may be operating from non–military fields. Be aware that certain procedures and services may vary from what you are used to (e.g., availability of fire guards, follow–me trucks, Base Ops, and weather office to file from, etc.).

Keep in mind that your flight plan may not be closed automatically as it would be at a military field. The aircraft commander is still required to confirm the closeout via Tower, Ground, Base Ops, or a Flight Service Station.

At non–military fields, you may have to file your flight plan with a Flight Service Station. If the FSS is located on the field, you may do this in person. For filing, you will utilize the civilian version of a DD 175 which will be available there. For weather services: OPNAV 3710 states – "Pilots are responsible for reviewing and being familiar with weather conditions for the area in which flight is contemplated. Where Naval Oceanography Command Services (NOCS) are locally available, weather briefings shall be conducted by a qualified meteorological forecaster. They may be conducted in person or by telephone, autograph, or weather vision. FAA weather briefings obtained from FSS or DUAT services may be used as a supplement to NOCS service briefing. If NOCS services are not locally available, an FAA approved weather briefing may be substituted." Remember! Military weather and NOTAM briefing facilities are listed in the FIH and are just a phone call away. For more information, refer to the FIH Section C.

If the FSS is not at the field, the above procedures may be accomplished over the telephone. When filing via telephone, you can provide the necessary information by using the format on the back cover of the IFR Supplement entitled "Filing Flight Plans in Flight."

8-2 CROSS-COUNTRY PLANNING

Request NOTAM information from the FSS. If the information available is not sufficient, contact the nearest suitable military base.

6. **High Altitudes** – It is possible that one or more of your flights will be flown at the upper altitude extreme of the Victor Airway structure or on Jet Routes. There are certain factors that vary with altitude. Among them are:

a. You may see lower indicated airspeeds than you are used to at lower altitudes. However, the difference between indicated and true airspeed is greater at higher altitudes. Use your navigation computer to determine true airspeed for the existing IAS, pressure altitude and outside air temperature.

b. You may reach ITT limitations prior to reaching the max torque setting, something not normally experienced at lower altitudes.

c. Remember that when flying at and above 18,000 feet MSL, altitudes are referred to as flight levels (FL180 = 18,000 feet) and should be referred to as such on flight plans. Refer to the FIH Section B (Altimeter Changeover Procedures) to determine lowest useable Flight Level. Always use a standard altimeter setting of 29.92 when operating at or above 18,000 feet.

7. **Entry into Terminal Area** – Prepare for the approach to your destination well in advance of your arrival in the terminal area. 40 to 50 miles out is a good time to start preparations. Review the approaches serving your destination. Also, review Missed Approach Procedures and the route you will fly to your alternate in the event this is necessary.

If you are expecting a PAR or ASR to your destination, do not fail to employ your NAVAIDS. If a TACAN exists at your destination, tune it in as an aid to orientation during the GCA. If there is not a NAVAID at the field, tune the nearest suitable ones that will aid in orientation or executing Missed Approach.

8. Finally, Instrument Navigation is a great exposure to the "real world" of aviation. It is important to not focus solely on the FTI as in the past stages, but incorporate information from all available sources, both military and civilian. For example: OPNAV 3710, AIM, FIH, GP, and Area Planning (AP). In addition, review Chapter 3 of NATOPS for servicing, local SOPs, Wing Stan Notes, and cross–country instructions. All of these resources contain information, which you will need to be familiar with in order to have a successful event.

THIS PAGE INTENTIONALLY LEFT BLANK

APPENDIX A
GLOSSARY

This information can also be found in the AIM and General Planning, Chapter Two.

ABEAM – An aircraft is “abeam” a fix, point, or object when that fix, point, or object is approximately 90 degrees to the right or left of the aircraft track. As applied to holding in the T-34C, when the tail of the needle passes through the radial perpendicular to the holding course, rather than the 90 degree benchmark (wingtip) on the HSI, the aircraft is "abeam." Abeam indicates a general position rather than a precise point.

AIRPORT SURVEILLANCE RADAR (ASR) APPROACH – Radar providing position of aircraft by azimuth and range data without elevation data. It is designed for a maximum range of 60 miles. Used for terminal approach control. Also used for Surveillance approaches. The ASR approach is conducted in accordance with directions issued by a controller referring only to the surveillance display. Also see GCA.

AIR ROUTE TRAFFIC CONTROL CENTER (ARTCC) – A facility established to provide traffic control service to Instrument Flight Rules (IFR) flights operating within controlled airspace and principally during the enroute phase of flight.

AIR TRAFFIC CONTROL CLEARANCE – Authorization by air traffic control facilities for an aircraft to proceed under specified traffic conditions within controlled airspace.

ALTITUDE RESTRICTION – An altitude or altitudes, stated in the order flown, which are to be maintained until reaching a specific point or time. Altitude restrictions may be issued by ATC due to traffic, terrain, or other airspace considerations.

APPROACH CONTROL FACILITY – A terminal Air Traffic Control facility that provides approach control service in a terminal area, (NOTE: Approach control service is provided by an approach control facility for arriving and departing aircraft. At some airports not served by an approach control facility, the Air Route Traffic Control Center provides limited approach control service.)

AUTOMATIC TERMINAL INFORMATION SERVICE (ATIS) – The continuous broadcast of recorded non-control information in selected terminal areas. Its purpose is to improve controller effectiveness and to relieve frequency congestion by automating the repetitive transmission of essential but routine information.

CEILING – The height above the earth’s surface of the lowest layer of clouds or obscuring phenomena that is reported as "broken," "overcast," or "obscuration," and not classified as "thin" or "partial."

CIRCLE–TO–LAND MANEUVER – A maneuver initiated by the pilot to align the aircraft with a runway for landing when a straight–in landing from an instrument approach is not possible or is not desirable.

CLEARANCE LIMIT – The fix to which an aircraft is cleared.

CLEARED FOR THE OPTION – ATC authorization for an aircraft to make a touch–and–go, low approach, Missed Approach, stop and go, or full stop landing at the discretion of the pilot.

COMPULSORY REPORTING POINTS – Reporting points which must be reported to ATC. They are designated on aeronautical charts by solid triangles or filed in a flight plan as fixes selected to define direct routes. These points are geographical locations which are defined by navigation aids/fixes. Pilots should discontinue position reporting over compulsory reporting points when informed by ATC that their aircraft is in "radar contact."

COURSE – A magnetic direction to fly in relation to a radio navigational facility. Note that a course is not simply a magnetic direction over the ground. If flying inbound on a radial, the course is the reciprocal of the radial. If flying outbound, the course is the same as the radial.

DECISION HEIGHT (DH) – On a precision approach the height at which a decision must be made to either continue the approach or to execute a Missed Approach.

DEPARTURE CONTROL – Air Traffic Control service provided to departing aircraft.

DIRECT – Straight line flight between two NAVAIDS, fixes, points, or any combination thereof. When used by pilots in describing off–airway routes, points defining direct route segments become compulsory reporting points unless the aircraft is under radar contact.

DISTANCE MEASURING EQUIPMENT (DME) – Airborne and ground equipment used to measure the slant range distance, in nautical miles, of an aircraft from the NAVAID.

DME FIX – A geographical position determined by reference to a navigational aid. It is defined by a specified distance in nautical miles and a radial in degrees magnetic from that aid. For example: a point 10 NM west of the NSE VORTAC on the 270º radial would be written as: NSE 270 010.

EMERGENCY FUEL – A declaration made by the pilot to inform ATC that the aircraft fuel status is dangerously low. The pilot is requesting priority handling and cannot accept any delays for the approach.

EMERGENCY SAFE ALTITUDE – An altitude expressed in 100–foot increments providing 1000 feet of clearance (2000 feet in designated mountainous areas) over all obstructions/terrain within 100 miles.

ESTABLISHED ON COURSE – The aircraft can be considered "established on course" when the aircraft position is within five radials of the selected VOR or TACAN course and the aircraft movement is in the same direction as the selected course. An aircraft is established on an ILS or Localizer course when the CDI needle is within 5 dots (221) and aircraft movement is in the same direction as the course. (NOTE: This definition applies to Primary Instrument training only.)

EXPECTED FURTHER CLEARANCE TIME (EFC) – The time a pilot can expect to receive clearance beyond a clearance limit.

FINAL APPROACH FIX (FAF) – The fix from or over which final approach (IFR) to an airport is executed.

FINAL APPROACH SEGMENT – The segment of an instrument approach between the FAF and the MAP.

FIX – A geographical position determined by reference to one or more radio NAVAIDS. A fix can be defined as the actual location of the NAVAID, a distance and radial from a NAVAID, or the crossing point of two different radials from two different NAVAIDS.

FLIGHT PLAN – Specified information provided to air traffic control facilities, relative to the intended flight of an aircraft.

FLIGHT SERVICE STATION (FSS) – A facility operated by the FAA to provide flight assistance service.

GROUND CONTROLLED APPROACH (GCA) **–** A Radar approach system whereby a controller interprets a radar display, transmitting approach instructions to the pilot by radio, to place the aircraft in position for landing. The approach may use airport surveillance radar (ASR) providing course and range information, or precision approach radar (PAR) providing course, range, and glideslope information. Usage of the term "GCA" by pilots is discouraged. Pilots should specifically request a "PAR" or "ASR" approach.

HEADING – The direction in which the longitudinal axis of the aircraft is pointed, usually expressed in degrees magnetic from North.

HEIGHT ABOVE AIRPORT (HAA) – The height of the MDA above the published airport elevation. HAA will be published in conjunction with all circling minimums.

HEIGHT ABOVE TOUCHDOWN (HAT) – The height of the DH or MDA above the highest runway elevation in the touchdown zone. HAT will be published in conjunction with all straight–in minimums.

IDENT – A request for a pilot to activate the aircraft transponder identification feature. This will help the controller to confirm an aircraft identity or to identify an aircraft.

INITIAL APPROACH FIX (IAF) – The fix depicted on an Instrument Approach Procedure chart that identifies the beginning of the initial approach segment.

INITIAL APPROACH SEGMENT – That part of an instrument approach between the Initial Approach Fix and the intermediate or Final Approach Fix or point.

INITIAL CONTACT – The first radio call you make to a given facility or the first call to a different controller.

INSTRUMENT APPROACH PROCEDURE (IAP) – A series of predetermined maneuvers for the orderly transfer of an aircraft under instrument flight conditions from the beginning of the initial approach to a landing or to a point from which a landing may be made visually.

INSTRUMENT DEPARTURE PROCEDURE (DP) – A preplanned Instrument Flight Rule (IFR) air traffic control departure procedure printed for pilot use in graphic and/or textual form. DPs provide transition from the terminal to the appropriate enroute structure.

INSTRUMENT METEOROLOGICAL CONDITIONS (IMC) – Weather conditions (visibility, ceiling and cloud clearance) below the minimums for flight under Visual Fight Rules (VFR).

INTERMEDIATE APPROACH SEGMENT – That part of an Instrument Approach Procedure from the first arrival at the first navigational facility or predetermined fix, to the beginning of the final approach.

INTERSECTION – A point defined by any combination of courses, radials, or bearings of two or more NAVAIDS. An intersection may also be defined by radial and DME.

JET ROUTES – A high altitude route system extending from 18,000 feet MSL to FL450, inclusive. The routes are predicated by high altitude navigational aids.

LOW APPROACH – An approach over an airport or runway following an instrument approach or a VFR approach including the go–around maneuver where the pilot intentionally does not make contact with the runway.

MANDATORY ALTITUDE (INSTRUMENT APPROACH) – The MSL altitude vertical to a geographic location which an aircraft must maintain during a portion of an instrument approach. The requirement for such may be created by airspace separation criteria or airspace separation criteria in conjunction with obstruction clearance criteria. A mandatory altitude will be depicted as an underlined number with a line above it.

MANEUVERING AIRSPACE – Airspace used at an IAF to allow an aircraft to maneuver for a favorable alignment with the initial approach course.

MAXIMUM ALTITUDE (INSTRUMENT APPROACH) – The MSL altitude vertical to a geographic location above which an aircraft may not be flown during an instrument approach until after passing the location. The requirement for a maximum altitude may be created by airspace separation criteria. On the approach plate, a maximum altitude will be depicted as a number with a line above it.

MINIMUM CROSSING ALTITUDE (MCA) – The lowest altitude at certain fixes at which an aircraft must cross when proceeding in the direction of a higher Minimum Enroute IFR Altitude.

MINIMUM DESCENT ALTITUDE (MDA) – The lowest altitude, expressed in feet above mean sea level, to which descent is authorized on final approach or during circling–to–land maneuvering in execution of a non–precision instrument approach.

MINIMUM ENROUTE ALTITUDE (MEA) – The altitude established between navigational aids or reporting points on airways, air routes, or advisory routes, which will meet obstruction clearance requirements, and which will also assure acceptable navigational signal coverage.

MINIMUM FUEL – Indicates that an aircraft's fuel supply has reached a state where, upon reaching the destination, it can accept little or no delay. This is not an emergency situation but merely indicates an emergency situation is possible should any undue delay occur. The pilot is not to expect priority handling unless specifically requested or declares "emergency fuel."

MINIMUM HOLDING ALTITUDE (MHA) – The lowest altitude prescribed for a holding pattern which assures navigational signal coverage, communications, and meets obstacle clearance requirements.

MINIMUM OBSTRUCTION CLEARANCE ALTITUDE (MOCA) – The specified altitude in effect between radio fixes on VOR airways, off–airway routes or route segments, which meets obstruction clearance requirements for the entire route segment and which assures acceptable navigational signal coverage only within 25 SM, 22 NM, of a VOR.

MINIMUM RECEPTION ALTITUDE (MRA) – The lowest altitude required to receive adequate signals to determine specific VOR/VORTAC/TACAN fixes.

MINIMUM SAFE ALTITUDE – An altitude expressed in 100–foot increments providing 1000 feet of clearance over all obstructions/terrain within 25 NM of the navigational aid on which the instrument approach chart is centered.

MINIMUM SECTOR ALTITUDE – Altitude which provides 1000 feet of obstacle clearance within 25 NM of a NAVAID. It is designated for sectors of at least 90º and found on the planview of Instrument Approach Procedures. These altitudes are for emergency use only and do not assure acceptable NAVAID sector coverage.

MINIMUM VECTORING ALTITUDE (MVA) – The lowest altitude, (expressed as an MSL altitude) that aircraft will be vectored by a radar controller. This altitude assures communications radar coverage and meets obstruction clearance criteria. It may be lower than the MEA.

MISSED APPROACH – A maneuver conducted when an instrument approach cannot be completed to a landing.

MISSED APPROACH POINT (MAP) – A point on an instrument approach at which Missed Approach Procedures shall be executed if required visual reference does not exist.

NAVAID – An electronic device which provides position data to aircraft in flight. NAVAIDS are normally located at fixed positions on the ground. The NAVAIDS most commonly used by the T–34C are VOR, VORTAC and TACAN aids.

NON–PRECISION APPROACH – A standard Instrument Approach Procedure in which no electronic glideslope is provided; e.g., VOR, TACAN, LOC, GPS or ASR approaches.

PRECISION APPROACH – A standard Instrument Approach Procedure in which electronic glideslope/glidepath is provided; e.g., ILS, PAR.

PRECISION APPROACH RADAR (PAR) – A standard Instrument Approach Procedure in which an electronic glideslope is provided. In this type of approach the pilot is provided with course and altitude information. A PAR approach is a precision approach. (See Ground Controlled Approach.)

PUBLISHED ROUTE – A route for which an IFR altitude has been established and published, e.g., federal airways, jet routes, area navigation routes, specified direct (feeder) routes.

PROCEDURE TURN (PT) – A maneuver used to reverse direction to establish an aircraft on the intermediate approach segment or final approach course of an instrument approach. The outbound course, direction of turn, distance within which the turn must be completed, and minimum altitude are specified in the procedure. However, the point at which the turn may be commenced, and the type and rate of turn, are left to the discretion of the pilot.

RADAR ENVIRONMENT – An area in which radar service may be provided.

RADAR IDENTIFICATION – The process of ascertaining that a radar target is the radar return from a particular aircraft.

RADAR VECTOR – A heading issued to an aircraft to provide navigational guidance by radar.

RADIAL – A radial is a magnetic bearing extending from a VOR, VORTAC, or TACAN.

RADIO MAGNETIC INDICATOR (RMI) – A navigation instrument that indicates both magnetic heading and magnetic bearing to a selected radio navigation facility.

REPORTING POINT – A specified geographic location in relation to which the position of an aircraft can be reported.

RUNWAY VISUAL RANGE (RVR) – The horizontal distance a pilot will see down the runway from the approach end. RVR is determined with electronic instruments and is reported in hundreds of feet. RVR, in contrast to prevailing or runway visibility, is based on what a pilot in a moving aircraft should see looking down the runway. RVR is horizontal visual range (NOT slant range).

SHALLOW INTERCEPT – Aircraft heading within 30º of the desired course and tracking toward it. (Note: This definition applies to Primary Instrument training only.)

SHORT RANGE CLEARANCE – A clearance issued to a departing IFR flight which authorizes IFR flight to a specific fix short of the destination while air traffic control facilities are coordinating and obtaining the complete clearance.

STANDARD INSTRUMENT DEPARTURE (SID) – A preplanned, coded, air traffic control IFR departure routing, preprinted for pilot use in graphic and textual form.

STATION – A radio navigational aid (see NAVAID).

STEPDOWN FIX – A fix permitting additional descent while on a segment of an instrument approach. The fix identifies a point at which a controlling obstacle has been safely overflown.

STOP AND GO – A procedure wherein an aircraft will land, make a complete stop on the runway, and then commence a takeoff from that point.

STRAIGHT–IN APPROACH – IFR – An instrument approach wherein final approach is begun without first having executed a Procedure Turn. This type of approach is not necessarily completed with a straight–in landing or made to straight–in landing minimums.

STRAIGHT–IN LANDING – A landing made on a runway aligned within 30º of the final approach course following completion of an instrument approach.

TACAN – An ultra–high frequency electronic air navigation aid which provides suitably equipped aircraft a continuous indication of bearing and distance (slant range) to the TACAN station.

TRACK – The actual flight path of an aircraft over the surface of the earth.

TRANSPONDER – The airborne radar beacon receiver/transmitter portion of the Air Traffic Control Radar Beacon System which automatically receives radio signals from ground interrogators and selectively replies.

VICTOR AIRWAYS – A route system established in the form of a corridor on controlled airspace. The routes are predicated solely on VOR/VORTAC NAVAIDS. Victor airways include airspace at least 1200 feet above the surface (sometimes higher) up to but not including 18,000 feet MSL.

VERTICAL DESCENT ANGLE (VDA) – The descent angle computed from either the final approach fix (FAF), or a stepdown fix, to the runway threshold at the published TCH (Threshold Crossing Height). The descent angle and TCH information are charted on the profile view of some non-precision approach charts, following the fix the angle was based on. The optimum descent angle is 3°; whenever possible the approach will be designed using this angle. The vertical descent angle, when published, is for information only, and is strictly advisory in nature.

VISUAL DESCENT POINT (VDP) – A defined point on the final approach course of a Non-precision Straight–in Approach Procedure, normally defined by DME, from which normal descent from the MDA to the runway touchdown point may be commenced, provided the runway environment is in sight and a safe landing can be accomplished.

APPENDIX B
SUPPLEMENTARY FLIGHT PROCEDURES AND EMERGENCY PROCEDURES

B100. FUEL, POSITION REPORTS

As in Contact Stage, check and report pounds of fuel remaining in each wing every 15 to 20 minutes during the flight. Include with your report an estimated position from the navigational facility in use, e.g., "Instruments checked, fuel quantity, 300 left, 280 right, on the Crestview 270º radial at 10 DME."

B101. GROUNDSPEED CALCULATIONS

A knowledge of groundspeed is essential to you as a pilot. Knowing your groundspeed will enable accurate determination of ETAs and facilitate fuel planning. Comparing true airspeed and groundspeed gives you wind information. All methods of determining groundspeed are similar in that they measure the amount of time required to cover a known distance or determine the distance traveled in a known amount of time. When tracking on a TACAN radial, the DME may be used to determine distance covered and the aircraft clock can keep track of elapsed time. In such a case, groundspeed is determined as follows:

1. Start the clock's sweep–second hand and note DME.
2. After six minutes have elapsed note DME and determine distance flown.
3. Multiply this distance by ten. The result is groundspeed in knots.
4. More accurate groundspeed checks can be obtained by timing for periods greater than six minutes. (For more than six minutes, the multiplier in step c. must be changed.)

NOTES

1. At 150 knots indicated airspeed (at low altitudes), you are traveling at approximately 2½ miles per minute, no wind. This fact allows you to make reasonably accurate ETAs until the refined procedures above can be accomplished.

2. Most Air Route Traffic Control Centers will be able to provide you with a groundspeed readout if you are in radar contact. This information can be used to check your own calculations and also those derived from GPS.

B102. TRUE AIRSPEED CALCULATIONS

You are familiar with the procedures for computing true airspeed as taught in IFR ground school. True airspeed is important mainly for flight planning. However, in the air it is also mandatory to report any true airspeed change of 10 knots or 5%, whichever is greater. Your proficiency in true airspeed calculation will be checked periodically.

B103. FUEL MANAGEMENT

Fuel management is accomplished in two phases: (1) preflight planning, and (2) inflight monitoring and updating. Preflight planning may be accomplished using the jetlog fuel plan you were taught in IFR ground school. Additionally, you should familiarize yourself with Section 11 of the T–34C NATOPS Manual which contains aircraft performance data. Utilize this section as necessary in your planning.

During the flight, you should check the accuracy of your fuel planning by comparing the fuel on board with the jet log estimates for your enroute fixes. Should predicted and actual fuel usage vary significantly, recompute your fuel plan. Monitor the fuel flow gauge and compare it with the predicted flow. Check for fuel splits and take corrective action as necessary.

If at any point you doubt your ability to reach your destination (or alternate) with required reserves, modify your flight plan and request ATC assistance as necessary. DO NOT BE A VICTIM OF "GET–HOME– ITIS!!"

B104. EMERGENCY FIELD SELECTION

As in VFR flying, a good Radio Instrument pilot is always looking for suitable landing fields in the event of an emergency. Under IMC, factors that determine field suitability include approach availability, lighting (if at night), runway length, and availability of maintenance services (depending on the urgency of the situation). The IFR enroute chart depicts those aerodromes with a DOD published instrument approach procedure in dark blue. The chart also gives field elevation, runway length, and lighting information. To further determine whether the approaches are compatible with your NAVAIDS you should be aware of the suitable fields that lie along your intended route of flight. If an emergency occurs, after taking the immediate action prescribed by NATOPS, you will contact ATC with your situation and intentions. If necessary, ATC can assist in the selection of and navigation to the nearest suitable field.

B105. ENROUTE WEATHER INFORMATION

Once airborne and established on your route of flight, it is prudent to get a weather update, not only for your intended landing field, but also for weather between your present position and destination. This information is most easily obtained from a Pilot–to–Metro facility. A discussion of this service is contained in the FIH. Also helpful can be FSS, radio call sign "(FSS Name) RADIO." These can be identified on the IFR charts by the heavy shadow over the air/ground communication boxes. FSS may provide weather advisories, but are not certified weather forecasters. Some selected NAVAIDS have Transcribed Weather Enroute Broadcast and Hazardous Inflight Weather Advisory Service transmitted on the VOR – see the IFR Enroute Chart legend.

B106. LOST COMMUNICATIONS

Refer to Procedures for Two–way Radio Failure in the Instrument Flight Rules Course; Emergency Procedures section of FIH.

Two–way radio failure and surrounding circumstances are so varied that exact procedures to be followed may not be covered in every situation. In an attempt to cover the majority of situations that will be encountered, the FAA has published specific procedures (FAR 91) that must be complied with and with which all pilots shall be familiar. These procedures are available to the pilot in flight in the Emergency Procedures Section of the FIH. When confronted with a situation not covered in the handbook, the pilot is expected to exercise good judgment in whatever action he/she elects to take. Under any circumstances, the pilot should guard all available communications frequencies, and, if so equipped, set the transponder in accordance with procedures prescribed in the FIH.

B107. UNINTENTIONAL THUNDERSTORM PENETRATION

See NIFM 8–6, T–34C NATOPS Chapter 18.

The first and most important rule about thunderstorms is to avoid them and to avoid any area where they may be found. Should unintentional thunderstorm penetration occur, follow the NATOPS "Thunderstorms and Turbulent Air Procedures." Additionally:

1. **Fly attitude.** Do not attempt to chase every variation in the altimeter or airspeed indicator. The information they give in a thunderstorm, especially in relation to pitch angles, is often unreliable. Fly the attitude indicator and let the aircraft's inherent stability do its job. It will be impossible to maintain altitude. Do not attempt it. Instead, concentrate on maintaining a straight and level attitude.

2. **Do not reverse course.** An attempt to do a 180º turn in the most severe part of a thunderstorm could put the aircraft in serious jeopardy. The aircraft loses some of its stability in a turn, it is easier for the pilot to become disoriented, and the chances are he is already more than halfway through the storm when he makes the decision to turn.

B108. ICING

Refer to the NATOPS "Inflight Icing" section. Intentional flight into or during icing conditions is prohibited in the T–34C.

Since instrument flight may involve prolonged operation through areas of visible moisture, it is imperative to note the outside air temperature, particularly during climbs and descents, and to avoid entering icing conditions. The pitot heater, windshield defogger, and engine air bypass door are the only devices available to combat icing, and are of limited value in removing ice. Use them when entering visible moisture before ice has a chance to accumulate. Fly over, under, or around any known icing conditions when at all possible. If ice has formed despite all precautions, land as soon as possible. Increase your airspeed during the approach to maintain positive control of the aircraft. Consider a no–flap landing.

B109. AIRCRAFT EMERGENCIES UNDER IFR

This section is designed to assist you in the development of good headwork when considering an appropriate course of action should you encounter an emergency situation while operating under IFR. Although NATOPS provides procedural guidance in the event of specific emergency situations, it does not provide precise guidance for all situations. As a pilot, you must develop your ability to recognize and analyze emergency situations and then determine a course of action, which will ensure the safety of your crew and aircraft while considering specifics of the situation.

Remember the golden rule: "Aviate, Navigate, Communicate." If in holding, or on an approach continue to perform your flying duties while executing the Emergency Procedures in a timely manner. Determine the nature of the emergency, the urgency with which you should land, devise a plan and execute it. Notify ATC by "declaring an emergency," then advise them of your intended action requesting priority handling (assistance) as necessary. The following factors will influence your decision: weather conditions, fuel remaining, aircraft status and position, airfield proximity, approach availability, and terrain. If lost, state your last known position, time, and heading since that position.

In an emergency requiring immediate action, the pilot in command may deviate from any rule or regulation as necessary to the extent required to safely handle the emergency. If this emergency authority is exercised to deviate from the provisions of an ATC clearance, the pilot in command must notify ATC as soon as possible and obtain an amended clearance.

Emergencies are generally classified under two categories:

DISTRESS – A condition of being threatened by serious and/or imminent danger and of requiring immediate assistance.

URGENCY – A condition of being concerned about safety and of requiring timely but not immediate assistance; the potential for a distress situation exists.

NOTE

Continue squawking the assigned transponder code if in radio contact with ATC. If unable to immediately establish two–way radio communications with ATC, squawk code 7700.

VMC – Remain VMC if possible while executing the appropriate Emergency Procedures. Notify ATC of the nature of your emergency and your intended action. It is the aircraft commander’s decision whether to continue flight or land as soon as possible. When communicating with ATC, consider your terminology. ATC will probably be unfamiliar with the term "PEL"; however, they will certainly understand the request for a "precautionary approach" or an "emergency landing." See Figure A–1.

IMC – If unable to reach VMC and continued flight under IMC conditions is required, notify ATC of the nature of your emergency and your intended action. Consider all pertinent information. Determine your present position relative to the nearest IAF compatible with the navigational equipment installed on your aircraft. Do not hesitate to declare an emergency if priority handling would expedite your approach and landing. Use good headwork when requesting the approach. Radar vectors to the final approach course is expeditious, however, not always available. Other methods include immediate clearance for a TACAN or VOR approach, as well as Ground Controlled Approaches. Situational awareness is essential to exercising good headwork.

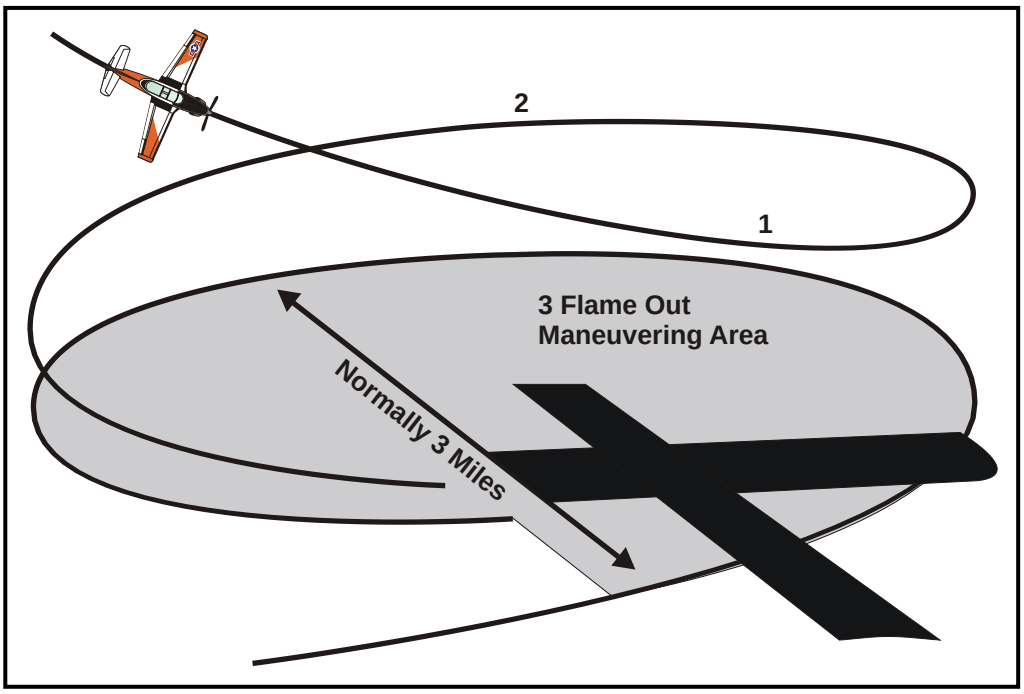

Figure B-1 Emergency Landing

1. High Key. That position over the airport where the pilot begins to maneuver the aircraft to enter a high downwind leg.

2. Low Key. That position on high downwind leg just before turning on base leg.

3. "Flameout" Maneuvering Area. That airspace to be occupied by an aircraft practicing "flameout" procedures, which begin at the high key, includes the low key, and ends at the landing threshold.

Examples:

"Corpus Christi Approach, Navy 4G279, holding at RYNOL, indicating low oil pressure, declaring an emergency, request immediate clearance for the TACAN 1 RWY 13R approach into Corpus Christi."

or

"Pensacola Approach, Navy 2E466, approximately 5 miles west of PENSI, experiencing fuel fumes in the cockpit, declaring an emergency, request radar vectors for an ILS 17 or VOR 8 approach at Pensacola Regional Airport."

Other considerations may include:

1. Requesting a crash crew or ambulance to be standing by.

2. Maintaining airspeed and/or altitude until closer to the FAF or runway.

3. In the event of an engine failure in IMC – a descent might require ATC clear other aircraft below you out of the way. Weather at the time of engine failure will affect your decision to bail out or stay with the aircraft until VMC are reached and the ELP may be intercepted.

4. Some NATOPS Emergency Procedures require you to secure the two utility bus switches. Thorough knowledge of the electrical system is an absolute necessity—you must know critical components on these utility buses so that once you secure power you can anticipate the loss of these instruments and systems. Inadequate systems knowledge may exacerbate an already dangerous situation. With the utility buses secured, you should be planning for a No–Gyro PAR or ASR. If you need the VOR or TACAN, good headwork may require you to pull all circuit breakers associated with the two utility bus switches, turn on the utility bus switches, and then push in either the VOR or TACAN circuit breakers as necessary. Now the use of either the VOR or TACAN is possible.

5. Prepare yourself for an unsafe landing gear indication on final approach course. Know the Emergency Procedures and be prepared to execute them. Consider your route of flight and altitude. Weather will affect your ability to obtain some sort of visual inspection by Tower or another aircraft. Holding is always an option if you need more time and allocated airspace to prepare yourself and crew for an emergency landing.

APPENDIX C
APPROACH PLATE STUDY TECHNIQUE

C100. GENERAL

During preflight planning, check forecast surface wind at destination for your estimated time of arrival. The runway in use is not always the one most closely aligned into the wind due to noise abatement procedures or traffic patterns, but usually you can narrow the number of approach plates to be studied. Approaching the terminal area, determine the instrument approach in use at destination from ATIS if available, or question the controller.

C101. RECOMMENDED APPROACH PLATE STUDY TECHNIQUE

The following is a recommended technique to study approach plates:

1. **Plan View**

Mentally fly the approach from the IAF to the MAP and determine all lead points and procedures that apply during the approach. Identify the point where the aircraft should be configured for landing. You undoubtedly will notice headings, NAVAID frequency and location, and the holding pattern if published. Other information available to you on the plan view is:

a. **Feeder Routes** are designed to channel aircraft from the enroute structure to the IAF. They are published only if they provide an operational advantage and coincide with the normal local air traffic flow. The course you see will take you to the IAF and the distance displayed is from the feeder fix to the IAF.

b. **Minimum Safe Altitude** provides the pilot with at least 1000 feet of obstacle clearance within a specified distance from the navigational facility upon which the procedure is predicated. An Emergency Safe Altitude provides a 1000–foot obstacle clearance within a 100–mile radius of the NAV facility or a 2000–foot obstacle clearance in designated mountainous areas.

c. **Frequencies.** At the top of the page, you will see listed the most commonly used frequencies and the name of the ATC facility to which you will be talking.

2. **Profile View**

Review for altitude and descent rates. Observe the altitude restrictions and know where they apply. Minimum, maximum, mandatory, and recommended altitudes precede the fix or facility to which they are intended. If this is not the case, an arrow will indicate exactly where the altitude applies. In this section, you will also find the published Missed Approach Procedures.

3. **Review the Minima**

The pilot obviously needs to know how low he/she can descend and you should be able to determine whether the weather is high enough for the type of approach you are planning to fly. To find the above information, you need to know what category of aircraft you are flying. Remember, if you are a category B aircraft, you can use minima for category C, D, or E aircraft but you cannot use a lower category to determine the appropriate information. If you are flying a VOR approach also note the time from the FAF to the MAP. Remember the timing is based on groundspeed, not IAS.

4. **Aerodrome Sketch**

Check the field elevation, which incidentally is the highest point on the usable landing area. Additionally, note the direction and distance of the runway from the FAF. You should also check the type of lighting that you would expect to see in marginal visibility. Memorize the first heading and first altitude of the Missed Approach Procedure. Study the aerodrome sketch to determine the position.

APPENDIX D
ADVANCED INSTRUMENT CONCEPTS

D100. GENERAL

The purpose of this section is to provide the experienced RI student with greater comprehension of selected radio instrument topics. Before delving into these concepts be sure that you have a solid background in the basics of RI.

The information and techniques within this Appendix should not be viewed as required procedures but as information to use in your execution of assigned maneuvers.

D101. RADIAL SPACING

You are no doubt familiar with the concept that as your distance from a NAVAID increases, the spacing between given radials also increase. However, just how much does radial spacing increase as you move from the station?

To answer this question, consider the following. At a distance of 60 NM from the station, there is one mile between each radial. As you get closer to the station, the radials are closer together. (For example, at 30 NM from the station, there is one–half mile between radials or two radials per mile; at 10 NM, it is 1/6 mile between radials, which equals six radials per mile. (Figure C–1) In general, 60 divided by distance from the station equals the number of radials per mile.

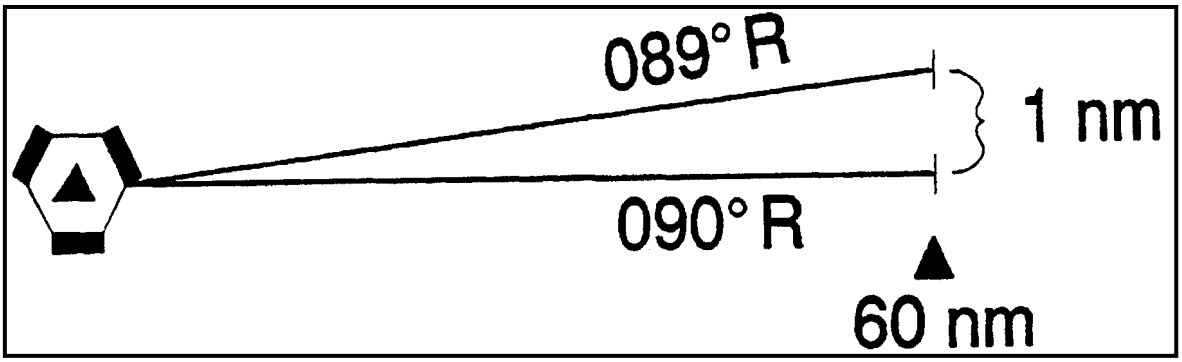

Figure D-1 Radial Spacing

D102. DISTANCE FROM AIRWAY CENTERLINE

Recall that a VOR Federal Airway is 8 NM wide, 4 NM on either side of the centerline. On some occasions, it may be helpful to estimate your distance from airway centerline.

Again, merely convert angular distance to nautical miles by the same calculation used above, e.g., 2º south of course at 30 NM from the TACAN station equates to 1 NM south of airway centerline.

D103. 60–TO–1 RULE IN VERTICAL PLANE

The 60–to–1 rule is a technique used to determine predictable results of changes in aircraft pitch and is applicable to all aircraft. Use of this rule and the information it provides reduces pilot workload and increases instrument proficiency by eliminating unnecessary changes in aircraft attitude. A thorough understanding of the 60–to–1 rule requires a review of four fundamental assumptions:

1. Use TAS expressed in nautical miles per minute (NM/min) to establish the relationship with pitch attitude. To simplify computations, IAS may be used in place of TAS and as an approximation of groundspeed.

Example: 120 knots = 2 NM/min

2. If a pilot applies and maintains a 1º change in pitch, the aircraft will make a 1º change in vertical flight path.

3. Similar to the discussion on radial spacing given in paragraph C101, 1º change in the vertical plane equals 1 NM at a distance of 60 NM from the apex (see Figure C–1).

4. One nautical mile approximates 6000 feet: 1 NM = 6000 feet. A visual presentation of the 60–to–1 rule in the vertical plane is depicted in Figure C–2:.

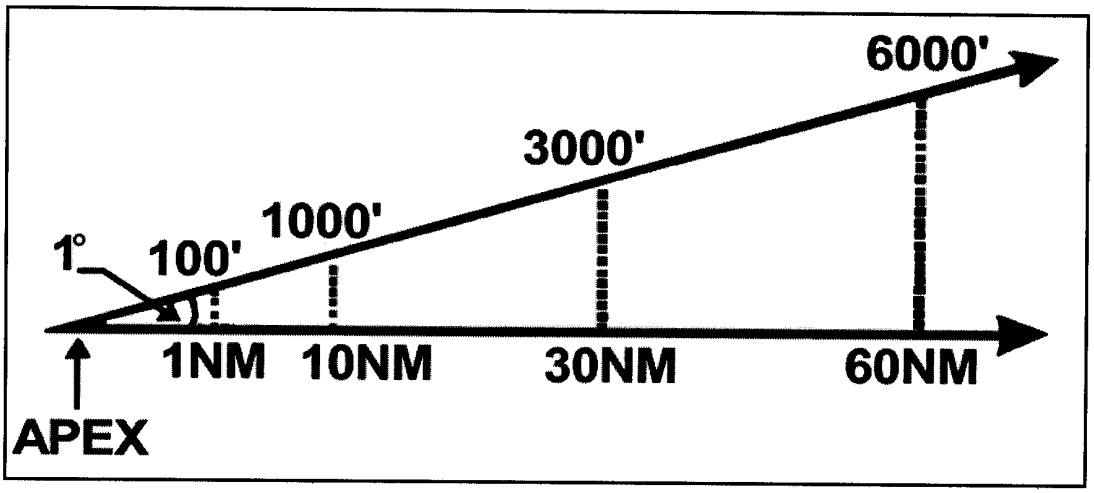

Figure D-2 Vertical Plane

Clearly, there is a constant relationship between the height of the 1º ray in feet and the distance from the apex in nautical miles. Notice the height of the 1º ray is 100 feet at 1 NM. This relationship (1º = 100 feet at 1 NM) is the heart of the 60–to–1 rule in the vertical plane and is mathematically constant based on our four assumptions. Therefore, if the distance from the apex (NM) or the angle (degrees) is changed, the altitude (feet) will be changed a proportionate amount.

If the distance is changed, multiply the altitude by the same factor. If the angle is changed, multiply the altitude by the same factor. If both the distance and the angle are changed, multiply the altitude by both factors.

Examples:

1º at 1 NM = 100 feet	1º at 5 NM = 500 feet
1º at 10 NM = 1000 feet	3º at 5 NM = 1500 feet
3º at 1 NM = 300 feet	3º at 30 NM = 9000 feet
3º at 10 NM = 3000 feet	

Consider the following formula when using pitch change (degrees) and airspeed (NM/min) to predict a specific rate of climb or descent (feet/min):

$$\text{pitch change} = \frac{\text{NM}}{\text{min}} \times \frac{\text{feet}}{\text{NM}} = \frac{\text{feet}}{\text{min}}$$

Example: IAS in BAC = 120 knots = 2 NM/min; 3º pitch change

$$3^{\circ} = \frac{2\ \text{NM}}{\text{min}} \times \frac{300\ \text{feet}}{\text{NM}} = 600\ \text{feet/min}$$

The 60–to–1 rule may be applied to determine pitch changes required during High/Low Altitude Instrument Approaches. By computing the altitude to be lost and the distance available to lose it, the descent gradient in feet/NM may be determined:

$$\frac{\text{alt to lose}}{\text{distance}} = \text{descent gradient in feet/NM}$$

Using the relationship (1º = 100 feet at 1 NM), the following is apparent:

change in nose pitch (degree) = descent grad / 100

Keep in mind, this change in nose pitch must be applied to the level flight attitude.

THIS PAGE INTENTIONALLY LEFT BLANK

APPENDIX E
CREW RESOURCE MANAGEMENT

E100. CREW RESOURCE MANAGEMENT

The "human error" factor or inadequate aircrew coordination is the single leading cause factor for serious mishaps in modern naval aviation. Crew resource management (CRM) involves the use and integration of all available skills and resources necessary to achieve and maintain flight and crew efficiency, situational awareness, mission effectiveness, and operational readiness. CRM affects pilots-to-controller, lead-to-wingman, and inter-cockpit coordination and communication skills.

The goal of CRM is to improve mission effectiveness/operational readiness by enhancing aircrew coordination through increased awareness of the seven associated behavioral skills that have been identified as critical and form the cornerstone of CRM. These are: decision making, assertiveness, mission analysis/briefing, communication, leadership, adaptability/flexibility, and situational awareness.

During flight training, up to this point, all seven skills were introduced; during this phase, assertiveness, communication, and situational awareness will be further explored.

E101. DECISION MAKING

Effective decision making refers to the ability to use logical and sound judgment based on the information available.

1. **Aircrew can make effective decisions by:**

    a. Assessing the problem.

    b. Verifying information.

    c. Identifying solutions.

    d. Anticipating consequences of decisions.

    e. Telling others of the decision and rationale.

    f. Evaluating the decision.

2. **Factors that promote good decision making:**

    a. Teamwork.

    b. Extra time to make a decision.

c. Alert crewmembers.

d. Decision strategies and experience.

E102. ASSERTIVENESS

Assertiveness refers to the willingness to actively participate, and the ability to state and maintain your position, until convinced by the facts (not the authority or personality of another) that your position is wrong.

1. **Aircrew members can assert themselves by**:

a. Providing relevant information without being asked.

b. Making suggestions.

c. Asking questions as necessary.

d. Confronting ambiguities.

e. Maintaining their position when challenged.

f. Stating opinions on decisions/procedures.

g. Refusing an unreasonable request.

2. **Most conservative response rule.**

Occasionally there is a disagreement in the cockpit that cannot be resolved due to lack of information. It is best to agree in advance to take the most conservative action in these situations until additional information is available.

3. **Two challenge rule.**

In extreme situations, if the pilot does not respond to two demands (e.g., "Waveoff, waveoff!"), the copilot should take the controls.

4. **Sandbag syndrome.**

The Sandbag Syndrome is based on a comforting premise that one or more other crewmembers have the situation under control and are looking out for your best interest. It can be experienced by any crew position, resulting in that person being "along for the ride." Do not let this happen to you; pay attention and **speak up** if and when necessary.

5. **Creating an assertive statement.**

Assertive statements typically use active verbs or recommend an action. To create an assertive statement:

a. Get the attention of the receiver.

b. State your concern.

c. Offer a solution.

d. Ask for feedback.

6. **Situations requiring assertiveness:**

a. Pre-flight

b. In-flight

c. Debrief

7. **Remember:**

a. Each aircrew member must be willing to act assertively if they are going to fulfill their responsibility toward mission success.

b. Use assertive statements rather than aggressive or passive behavior.

c. It is what you do not say that can kill you!

E103. MISSION ANALYSIS

Mission analysis refers to the ability to coordinate, allocate, and monitor crew and aircraft resources.

1. **Mission analysis includes:**

a. Organizing and planning for what will occur during the mission.

b. Monitoring the current situation.

c. Reviewing and providing feedback of what has occurred.

2. **The three stages of mission analysis:**

a. Pre-mission analysis:

i. Establishes mission requirements and constraints.

ii. Specifies both long and short term plans.

iii. Advises the crew about what to expect.

b. **In-flight analysis**:

i. Critiques and updates existing plans.

ii. Evaluates results of previous decisions.

iii. Informs the crew of changes to flight concept.

c. **Post-mission analysis:**

i. Critiques entire mission.

ii. Determines area for future improvement.

E104. COMMUNICATION

Effective communication refers to the ability to clearly and accurately send and acknowledge timely information, instructions, or commands, and provide useful feedback.

1. **Communication.** It is important to ensure everybody fully understands what is being communicated in order to:

a. Conduct effective missions.

b. Avoid mishaps.

c. Pass information from one person to another.

2. **Maintain group situational awareness.**

3. **Sender's Responsibilities:**

a. Communicating information clearly.

b. Conveying information accurately, concisely, and timely.

c. Requesting verification or feedback.

d. Verbalizing plans.

4. **Receiver's Responsibilities:**

   a. Acknowledge communication.

   b. Repeat information.

   c. Paraphrase information.

   d. Clarify information.

   e. Provide useful feedback.

5. **Communication Checklist.**

   a. **Sender:**

      i. Provide information as required.

      ii. Provide information when asked.

      iii. Reply with questions or comments.

      iv. Ask for clarification.

      v. Provide useful feedback.

   b. **Receiver:**

      i. Acknowledge communication.

      ii. Repeat information.

      iii. Reply with questions or comments.

      iv. Ask for clarification.

      v. Provide useful feedback.

   c. **Overcoming Barriers to Communication:**

      i. Use active listening techniques.

      ii. Require feedback.

      iii. Use appropriate mode of communication and decibel level.

iv. Use standard terminology.

6. **Remember:**

a. The greatest enemy of effective communication is the illusion of it.

b. Effective communication is vital at all times, both inside and outside the cockpit.

c. Be aware of barriers to communication and attempt to overcome them.

E105. LEADERSHIP

Leadership is the ability to direct and coordinate the activities of other crewmembers and to stimulate the crew to work together as a team.

Being a good leader involves inspiring your crew to work up to their potential; a good leader can bring out the best in his/her crew. The leader is in control of the situation and has certain responsibilities.

Aircrew leaders must be able to:

1. Direct and coordinate the crew's activities.
2. Delegate tasks.
3. Make sure the crew understands what is expected of them.
4. Focus attention on the crucial aspects of the situation.
5. Keep crewmembers informed of the mission information.
6. Ask crewmembers for mission relevant information.
7. Provide feedback to the crew on their performance.
8. Create and maintain a professional atmosphere.

E106. ADAPTABILITY/FLEXIBILITY

Adaptability/Flexibility refers to the ability to alter one's course of action contingent upon or as a function of another's action and/or situational demands.

1. **Adaptable/flexible aircrew members should be able to:**

a. Alter their behavior to meet situational demands.

b. Be open and receptive to other ideas.

c. Help others when necessary.

d. Maintain constructive behavior under pressure.

e. Adapt to internal and external environmental changes.

2. **Situations requiring adaptability:**

a. When unbriefed situations arise.

b. When a routine mission becomes an emergency.

3. **When transitions occur**.

4. **When a crewmember is incapacitated.**

5. **When interactions are strained**.

E107. SITUATIONAL AWARENESS

Situational awareness refers to the ability to identify the source and nature of problems, and to extract and interpret essential information. One must maintain an accurate perception of the external environment, and detect situations that require action. Situational awareness requires that we know: Who is responsible for specific activities; what is happening; when events are supposed to occur; and where the aircraft is in three dimensional space.

1. **Maintaining a correct image of reality.**

Mission success depends on your maintaining or recovering situational awareness. Use the following techniques to maintain a correct image of flight:

a. Detect and comment on deviations.

b. Provide information in advance.

c. Identify potential problems.

d. Demonstrate an awareness of task performance and mission status.

2. **To Maintain and/or recover situational awareness**:

a. Prepare a through comprehensive brief.

b. Acknowledge potential problems.

c. Communicate.

d. Use all information sources.

e. Update and revise your flight image.

3. **Factors that reduce situational awareness**:

a. Insufficient communication.

b. Fatigue/stress.

c. Task overload/underload.

d. Group mind-set.

e. "Press on regardless" philosophy.

f. Degraded operating conditions.

4. **Combat the loss of situational awareness by:**

a. Actively questioning and evaluation your mission progress.

b. Using assertive behaviors when necessary.

c. Analyzing your situation.

d. Updating and revising your image of the mission.

5. **Remember:**

a. Situational awareness is a critical factor in our ability to respond effectively to a situation.

b. Maintaining a high level of situational awareness will better prepare crews to respond to expected situations.