**NAVAL AIR TRAINING COMMAND**

**NAS CORPUS CHRISTI, TEXAS** **CNATRA P-357 (Rev. 09-06)**

# FLIGHT TRAINING INSTRUCTION

# PRIMARY FORMATION

# T-34C

**2006**

**DEPARTMENT OF THE NAVY**
CHIEF OF NAVAL AIR TRAINING
CNATRA
250 LEXINGTON BLVD SUITE 102
CORPUS CHRISTI TX 78419-5041

IN REPLY REFER TO:

CNATRA P357
N712
04 OCT 2006

CNATRA P-357 (REV 09-06)

Subj: FLIGHT TRAINING INSTRUCTION, PRIMARY FORMATION T-34C

1. CNATRA P-357 (Rev. 09-06) PAT, "Flight Training Instruction, Primary Formation T-34C" is issued for information, standardization of instruction, and guidance of all flight instructors and student aviators within the Naval Air Training Command.

2. This publication shall be used as an explanatory aid to the Primary Multi-Service Pilot System Curriculum. It will be the authority for the execution of all flight procedures and maneuvers therein contained.

3. Recommendations for changes shall be submitted via CNATRA TCR form CNATRA 1555/19 in accordance with CNATRAINST 1550.6E.

4. CNATRA P-357 (Rev. 06-03) PAT, is hereby cancelled and superseded.

R. A. RALL
By direction

Distribution:

CNATRA N71 (5) plus original
CNATRA N62 (1)
COMTRAWING FOUR (600)
COMTRAWING FIVE (800)

# FLIGHT TRAINING INSTRUCTION

# FOR

# PRIMARY FORMATION

# T-34C

# Q-2A-0010

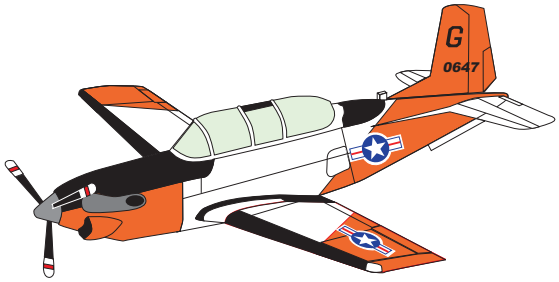


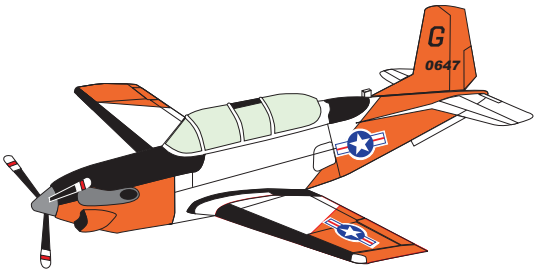

## SAFETY/HAZARD AWARENESS NOTICE

This course does not require any special safety precautions other than those normally found on the flight line.

## LIST OF EFFECTIVE PAGES

*Dates of issue for original and changed pages are:*
Original...0...15 Sep 06 (this will be the date issued)
Change Transmittal…1…08 Sep 08
Change Transmittal…2…16 Oct 08
Change Transmittal…3…16 Jul 09

**TOTAL NUMBER OF PAGES IN THIS PUBLICATION IS 118 CONSISTING OF THE FOLLOWING:**

| PAGE NO. | Change No. | Page No. | Change No. |
|---|---|---|---|
| COVER | 0 | 6-1 – 6-11 | 0 |
| LETTER | 0 | 6-12 (blank) | 0 |
| iii – x | 0 | 7-1 – 7-6 | 0 |
| 1-1 – 1-2 | 0 | 8-1 – 8-4 | 0 |
| 2-1 – 2-3 | 0 | 8-5 | 2,3 |
| 2-4 | 2 | 8-6 – 8-11 | 0 |
| 2-5 | 0 | 8-12 (blank) | 0 |
| 2-6 (blank) | 0 | 9-1 – 9-6 | 0 |
| 3-1 – 3-44 | 0 | 9-7 | 2 |
| 4-1 – 4-2 | 0 | 9-8 – 9-9 | 0 |
| 5-1 – 5-2 | 1 | 9-10 (blank) | 0 |
| 5-3 – 5-9 | 0 | A-1 – A-3 | 0 |
| 5-10 (blank) | 0 | A-4 (blank) | 0 |
| | | | |

## INTERIM CHANGE SUMMARY

The following Changes have been previously incorporated in this manual:

| CHANGE NUMBER | REMARKS/PURPOSE |
|---|---|
| 1 | Changes made per transmittal letter (09-08-08) |
| 2 | Changes made per transmittal letter (10-16-08) |
| 3 | Changes made per transmittal letter (07-16-09) |
| | |

The following interim Changes have been incorporated in this Change/Revision:

| INTERIM CHANGE NUMBER | REMARKS/PURPOSE | ENTERED BY | DATE |
|---|---|---|---|
| | | | |
| | | | |
| | | | |
| | | | |
| | | | |
| | | | |
| | | | |

## TABLE OF CONTENTS

**LIST OF EFFECTIVE PAGES** ..... **v**
**INTERIM CHANGE SUMMARY** ..... **vi**
**TABLE OF CONTENTS** ..... **vii**
**TABLE OF FIGURES** ..... **ix**

**CHAPTER ONE - INTRODUCTION TO FORMATION** ..... **1-1**
100. INTRODUCTION ..... 1-1
101. FORMATION DEFINED ..... 1-1
102. FLIGHT DISCIPLINE ..... 1-1

**CHAPTER TWO - GROUND PROCEDURES** ..... **2-1**
200. INTRODUCTION ..... 2-1
201. OUTBOUND ..... 2-1
202. INTERVAL TAKEOFF ..... 2-4
203. INBOUND TO PARKING AFTER LANDING ..... 2-5

**CHAPTER THREE - SECTION PARADE** ..... **3-1**
300. INTRODUCTION ..... 3-1
301. RADIO FREQUENCY CHANGES ..... 3-1
302. DEPARTURE/PARADE SEQUENCE/RECOVERY PHASE OVERVIEW ..... 3-3
303. RUNNING RENDEZVOUS ..... 3-4
304. PARADE POSITION ..... 3-7
305. RELATIVE MOTION ..... 3-8
306. FLYING PARADE AS WING, ERROR DETECTION, AND CORRECTION ..... 3-9
307. DEPARTURE ..... 3-15
308. FUEL CHECK ..... 3-16
309. THE PARADE SEQUENCE ..... 3-18
310. PARADE TURN EXERCISE ..... 3-18
311. CROSSUNDER ..... 3-22
312. BREAKUP AND RENDEZVOUS EXERCISE ..... 3-26
313. RENDEZVOUS UNDERRUN ..... 3-38
314. LEAD CHANGE PROCEDURE ..... 3-40
315. RECOVERY PHASE ..... 3-42

**CHAPTER FOUR - FORMATION SOLO FLIGHT** ..... **4-1**
400. INTRODUCTION ..... 4-1
401. FORMATION CHECK (F4005) ..... 4-1
402. SOLO FLIGHT (F4401) ..... 4-1

**CHAPTER FIVE - FORMATION EMERGENCIES** ..... **5-1**
500. INTRODUCTION ..... 5-1
501. AIRCRAFT MAINTENANCE PROBLEMS ON DECK ..... 5-3
502. INTERVAL TAKEOFF ABORTS ..... 5-3
503. SECTION PEL ..... 5-3
504. UNSAFE LANDING GEAR INDICATIONS ..... 5-4

505. AIRBORNE LANDING GEAR INSPECTION ..... 5-5
506. AIRBORNE DAMAGED AIRCRAFT ..... 5-6
507. UNINTENTIONAL INSTRUMENT FLIGHT / LOST SIGHT PROCEDURES ..... 5-6
508. BLIND PROCEDURES ..... 5-8
509. RADIO FAILURE (NORDO) ..... 5-9

**CHAPTER SIX - SECTION TAKEOFFS AND APPROACHES/IFR OPERATIONS ..... 6-1**
600. INTRODUCTION ..... 6-1
601. SECTION TAKEOFF ..... 6-1
602. SECTION TAKEOFF ABORTS ..... 6-5
603. IFR PARADE TURN EXERCISE ..... 6-5
604. IFR PARADE TURNS AWAY ..... 6-6
605. IMC LOST SIGHT ..... 6-6
606. INSTRUCTOR IFR PARADE POSITION ..... 6-7
607. SECTION APPROACH ..... 6-8
608. SECTION MISSED APPROACH ..... 6-11

**CHAPTER SEVEN - CRUISE FORMATION ..... 7-1**
700. INTRODUCTION ..... 7-1
701. MAINTAINING THE CRUISE POSITION ..... 7-3
702. CRUISE CLIMBS AND DESCENTS ..... 7-5
703. SECTION CRUISE LEAD CHANGE ..... 7-5

**CHAPTER EIGHT - CRUISE MANEUVERING ..... 8-1**
800. INTRODUCTION ..... 8-1
801. CRUISE MANEUVERING OVERVIEW ..... 8-1
802. FENCE CHECK ..... 8-2
803. ENERGY MANAGEMENT ..... 8-2
804. KNOCK-IT-OFF (KIO) / TERMINATE PROCEDURES ..... 8-3
805. CRUISE MANEUVERING ..... 8-5
806. TAIL-CHASE EXERCISE ..... 8-7

**CHAPTER NINE - FORMATION VISUAL SIGNALS ..... 9-1**
900. INTRODUCTION ..... 9-1
901. PASSING SIGNALS ..... 9-1
902. GENERAL SIGNALS ..... 9-1
903. RUNUP ..... 9-2
904. TAKEOFF, SECTION TAKEOFF ..... 9-5
905. CLIMBOUT, AREA, DESCENT ..... 9-6
906. RADIO COMMUNICATIONS ..... 9-7
907. AIRCRAFT AND ENGINE OPERATION ..... 9-7
908. EQUIPMENT MALFUNCTION / HEFOE SIGNALS ..... 9-8

**APPENDIX A - GLOSSARY ..... A-1**

## TABLE OF FIGURES


**Figure 2-1** Stagger Taxi Picture ..... 2-2
**Figure 2-2** Stagger Taxi (TW-5) ..... 2-2
**Figure 2-3** Trail Taxi Position (TW-4 and TW-5) ..... 2-2
**Figure 2-4** Runway Lineup ..... 2-4
**Figure 2-5** Runway Lineup Picture ..... 2-5

**Figure 3-1** Initial Running Rendezvous Picture Wing Covering Exhaust Stack ..... 3-5
**Figure 3-2** 20 Feet of Stepdown ..... 3-6
**Figure 3-3** 20 Feet of Stepdown ..... 3-6
**Figure 3-4** The Starboard Parade Position ..... 3-8
**Figure 3-5** 45º Bearing Line in the Parade Position ..... 3-9
**Figure 3-6** Insufficient Stepdown ..... 3-10
**Figure 3-7** Excessive Stepdown ..... 3-10
**Figure 3-8** Intersection of Prop Arc on the Midpoint and Ventral Point on the Cutout ..... 3-11
**Figure 3-9** "Sucked" With Aileron (Insufficient Lateral Separation) ..... 3-11
**Figure 3-10** "Acute" With Aileron (Excessive Lateral Separation) ..... 3-12
**Figure 3-11** "Sucked" With Power (Excessive Nose-Tail Separation) ..... 3-12
**Figure 3-12** "Acute" With Power (Insufficient Nose-Tail Separation) ..... 3-13
**Figure 3-13** Deviations Off Bearing ..... 3-14
**Figure 3-14** Fuel Check Signal ..... 3-17
**Figure 3-15** Parade Turns Into ..... 3-19
**Figure 3-16** Turns Away (VMC) ..... 3-21
**Figure 3-17** References for Turns Away (VMC) ..... 3-21
**Figure 3-18** Crossunder ..... 3-22
**Figure 3-19** The Crossunder Signal ..... 3-23
**Figure 3-20** 20 Feet of Stepdown ..... 3-24
**Figure 3-21** Move Across to Other Side With Nose-Tail Clearance ..... 3-25
**Figure 3-22** Align Ventral Point over Cutout on Other Wing ..... 3-25
**Figure 3-23** Radius of Turn ..... 3-26
**Figure 3-24** Bearing Line ..... 3-26
**Figure 3-25** Lead Pursuit ..... 3-27
**Figure 3-26** Lag Pursuit ..... 3-27
**Figure 3-27** Pure Pursuit ..... 3-28
**Figure 3-28** Breakup and Rendezvous Signal ..... 3-29
**Figure 3-29** Kiss-Off Prep ..... 3-30
**Figure 3-30** Kiss-Off Execute ..... 3-30
**Figure 3-31** 45º Bearing Line ..... 3-32
**Figure 3-32** 60º Bearing Line (Tip of Lead's Vertical Stabilizer on the Tip of Lead's .. 3-32
Opposite Wing) ..... 3-32
**Figure 3-33** "Acute" During Breakup and Rendezvous ..... 3-34
**Figure 3-34** "Sucked" During Breakup and Rendezvous ..... 3-35
**Figure 3-35** Joinup Picture, 20 Feet of Stepdown ..... 3-36
**Figure 3-36** Underrun if Lead is Straight and Level ..... 3-38
**Figure 3-37** Underrun When Lead is in a Turn ..... 3-39

**Figure 3-38 Initiate Lead Change ..... 3-40**
**Figure 3-39 Pass the Lead ..... 3-41**
**Figure 3-40 Wing Accepts the Lead ..... 3-41**

**Figure 5-1 The Emergency Chase Position ..... 5-2**
**Figure 5-2 Section PEL ..... 5-4**
**Figure 5-3 Airborne Landing Gear Inspection Checking the Mains ..... 5-5**
**Figure 5-4 Airborne Landing Gear Inspection Checking the Nose ..... 5-5**
**Figure 5-5 Lost Sight - Straight and Level ..... 5-7**
**Figure 5-6 Lost Sight – Turns ..... 5-7**

**Figure 6-1 Section Takeoff Brake Release ..... 6-2**
**Figure 6-2 Section Takeoff Rotation ..... 6-4**
**Figure 6-3 Instructor IFR Parade Position ..... 6-7**
**Figure 6-4 Cruise Form Section Pattern (TW-5) ..... 6-10**

**Figure 7-1 Cruise Signal ..... 7-2**
**Figure 7-2 Cruise Position Close-up ..... 7-3**
**Figure 7-3 The Cruise Position ..... 7-4**
**Figure 7-4 Cruise Turns Into - Lead's Horizontal Stabilizer Lined Up With Red Line of Star ..... 7-5**
**Figure 7-5 Cruise Lead Change ..... 7-6**

**Figure 8-1 Tail-Chase Signal ..... 8-8**

**Figure 9-1 Propeller in Feather Signal ..... 9-2**
**Figure 9-2 Improper Lighting Configuration Signal ..... 9-3**
**Figure 9-3 Canopy is Open Signal ..... 9-4**
**Figure 9-4 Flaps are Down Signal ..... 9-5**
**Figure 9-5 Aircraft and Engine Operation Signals ..... 9-8**
**Figure 9-6 Equipment Malfunction / HEFOE Signals ..... 9-9**

**Figure A-1 Bearing Line ..... A-1**

# CHAPTER ONE
# INTRODUCTION TO FORMATION

## 100. INTRODUCTION

The formation syllabus is one of the most challenging yet exciting portions of your Primary Flight Training. The purpose of the syllabus is for students to learn to recognize and control relative motion and understand the concepts of mutual support and situational awareness with regard to section formation flight. Formation flight is uniquely military; it's what sets us apart from our civilian counterparts. Formation flying enables military planners to improve command and control, concentrate firepower, transport numerous aircraft and assets at one time, and ensure mutual support. Formation flying has many different considerations making it unique from single ship flying. In contact and instrument flying, you may be varying 20 to 30 feet off altitude or 5 to 10 knots off airspeed and not think anything of it, whereas in formation flying, moving on the order of 2 to 3 feet off altitude or a couple knots off airspeed has a much greater impact.

## 101. FORMATION DEFINED

A formation consists of two or more aircraft flying in close proximity with all movements coordinated and in unison. The smallest formation unit is a "Section," which is defined as a formation of two aircraft, one Lead and one Wingman**.** Three or four aircraft in formation is called a "Division." Adding sections or divisions as required make larger formations or "Flights." No matter what the size of the formation, a designated flight lead will be in charge.

## 102. FLIGHT DISCIPLINE

Discipline, as applied to formation flying, involves the conduct of the flight members both as individuals and part of a team. As team members, where individual error affects the overall performance of the flight, each member must do their utmost to ensure the flight functions smoothly and effectively. In order to accomplish the mission as a team, formation members must have a thorough understanding of each team member's role in the formation.

**The Formation Leader**. The formation leader is responsible for the safe conduct of the mission and ensures all mission objectives are met. In order to ensure success, the flight leader must in all cases **be the best possible platform** for the Wingman. This concept is called "**Wingman consideration**." Lead should fly so that power changes, level-offs, and roll-rates are so smooth, they are almost imperceptible to the Wingman. The pitfall to Wingman consideration, however, is to be so considerate that Lead flies sloppy parameters, i.e., climbs through a level-off altitude, overturns assigned headings, lets the aircraft climb above an assigned altitude in turns.

Formation flying also requires proactive thinking and planning. Everything takes a little longer to accomplish in flight. Common tasks like changing the radio frequency, climbing, leveling off, and turning require more time in a formation flight and Lead will have to plan accordingly. In order to maneuver the flight safely and effectively within the confines of the designated formation area, Lead must first possess a clear understanding of the area's boundaries. Additionally, Lead must be able to visualize how combinations of turns or maneuvers can be

utilized to guide the flight within those boundaries. Wind speed and direction will affect the flight's ground track and should also be considered. Finally, the Lead should be conscious of the sun's position relative to Wing and attempt to limit the Wingman's exposure to looking into the sun as much as possible.

Summary of Lead's Responsibilities:

1. Be a smooth, stable platform for Wing.

2. Keep the flight within the proper operating area and comply with local course rules.

3. Keep the flight clear of clouds and other aircraft.

4. Always be aware of the position of Wing.

5. Meet the mission objectives in a safe, efficient manner.

**The Wingman**. Simply stated, the Wing's responsibility is to be in the position signaled by the flight lead at all times and comply with Lead's commands in a timely manner. Unlike Lead, Wing should be more aggressive, using frequent flight control or power control lever (PCL) inputs (although the magnitude of these inputs may be small) to maintain position. In other words, Wing should never accept being out of position and should always strive to "gravitate" back into position.

Summary of Wing's Responsibilities:

1. Always maintain the position signaled by Lead (parade, cruise, etc.).

2. Keep Lead in sight.

3. Comply with all signals given by Lead and, when required, be prepared to give a timely response signal.

4. Maintain situational awareness of what is going on in flight and be prepared for upcoming events. In other words, be a "thinking Wingman" ready for Lead's next command.

# CHAPTER TWO
# GROUND PROCEDURES

## 200. INTRODUCTION

Using teamwork to accomplish a mission is what it takes to be a good formation pilot. In Primary, teamwork starts on the ground. You and your form partner should strive to accomplish everything together and at the same time, from studying and setting up briefing space to preflighting.

## 201. OUTBOUND

Consult local SOP for specific ground procedures required by your Training Air Wing. The following ground procedures will be common to all formation flights:

1. The briefing, aircraft issue, and preflight will be conducted in the same manner as any syllabus flight. Students should note the location of their Wingman's aircraft on the flight line. This enables each crew to observe if another aircraft in the flight is having difficulties prior to turning on the radios.

2. During the Prestart Checklist, **navigation lights will be on bright**. This identifies the aircraft as a member of a formation flight. Set up the VHF radio in accordance with local SOP with VHF receive switch "off" (or set it up the way the flight lead briefs before the flight).

3. Conduct radio check-ins in accordance with local course rules.

4. All aircraft in the flight will monitor ATC clearances and dial in the appropriate transponder code and altimeter setting. Wing will dial in the appropriate squawk and then keep his transponder in "standby."

5. Taxi to the runup area observing local course rules. Lead should taxi at a speed allowing the Wingman to get into and maintain position. Once Wing is in position, Lead should use a normal taxi speed. Lead should monitor Wing's position during the taxi. **TW-4 aircraft will taxi in a trail position in accordance with local Standard Operating Procedures. TW-5 aircraft can either "stagger taxi" or taxi in a trail position where appropriate.**

The "staggered" position for the Wing is lining up Lead's main landing gear tire over the nose gear (Figure 2-1). Wing should taxi approximately one plane length behind lead and **at no time should Wing's wingtip overlap Lead's wing** (Figure 2-2).

**Figure 2-1 Stagger Taxi Picture**

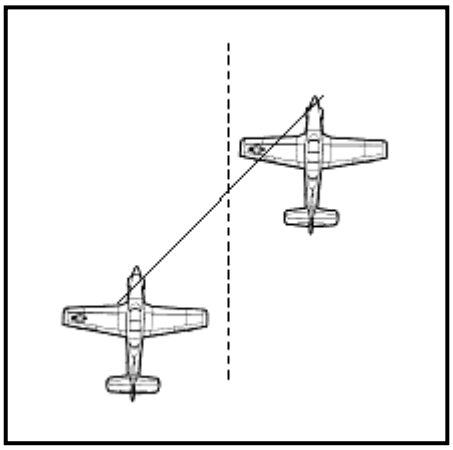

**Figure 2-2 Stagger Taxi (TW-5)**

The trail taxi position for Wing is directly behind Lead's aircraft (Figure 2-3). Wing should taxi with enough spacing to prevent a collision with Lead during a brake failure (1-2 plane lengths back should allow Wing enough time to use full Beta and notify Lead during a brake failure).

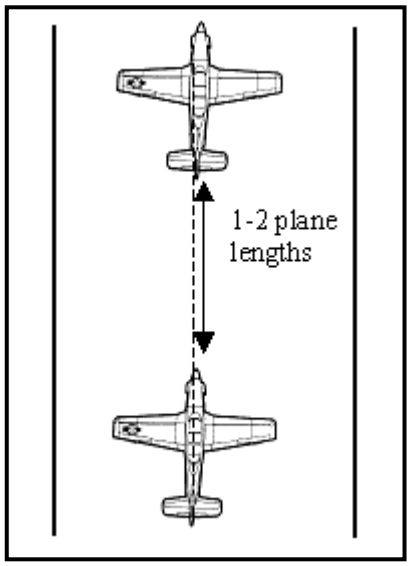


**Figure 2-3 Trail Taxi Position (TW-4 and TW-5)**

## 2-2 GROUND PROCEDURES

6. Lead shall position in the runup area leaving sufficient room for the Wingman to park. Wing should park next to Lead in a position to see Lead's landing gear and to avoid overlapping wings. Each aircraft will complete the engine Runup and Takeoff Checklists individually. When both aircraft have completed their checklists, they will each conduct the 11-Point Inspection to include, as a minimum, the following items:

1. Prop Out of Feather
2. Engine Cowlings Secure
3. Canopies Closed and Locked
4. All Panels Secure
5. Proper Extension of Struts
6. Proper Tire Inflation
7. Flaps Retracted
8. All Antennas Secure
9. Horizontal and Vertical Stabilizers
10. No Visible Leaks
11. Navigation and Strobe Lights On

At the conclusion of the 11-Point Inspection, Wing will pass Lead a thumbs-up. Lead will acknowledge Wing by returning the thumbs-up. If any of the 11-Point Inspection items are not correct, a "thumbs-down" shall be given to that aircraft, followed by an appropriate hand signal or radio transmission to correct the problem(s). (See Chapter 9 for Appropriate Visual Signals).

7. Lead will conduct radio changes in accordance with local course rules/SOP, and then taxi to the hold-short line. Two hundred feet prior to the hold-short line, Lead will turn off the navigation lights and switch to tower frequency, Wing will switch to tower at Lead's signal (navigation lights off) and then turn off his navigation lights. Lead will check Wing in on the tower frequency and then call for takeoff for the entire flight.

"_____ Tower, [Lead's Call Sign], Flight of _____ [# of Aircraft in Flight], Takeoff"

## 202. INTERVAL TAKEOFF

1. **Lineup.** Once the section has been given clearance to take the runway, Lead will note the winds on the windsock or reported by Tower. Lead will place his aircraft on the downwind side of the runway (Wingman into the wind). Each aircraft will take the center of their side of the runway. If the winds are reported calm, Lead may take either side of the runway based off departure heading, sun angle, etc. Both aircraft will finish the Takeoff Checklist as they take the runway with Wing leaving his transponder in "standby." Wing will let Lead taxi ahead to allow room to align on the runway. Once Wing is certain which side Lead is taking, Wing will taxi to the center of his side and line up the leading edge of his wing with the trailing edge of Lead's same-side elevator (Figures 2-4 and 2-5).

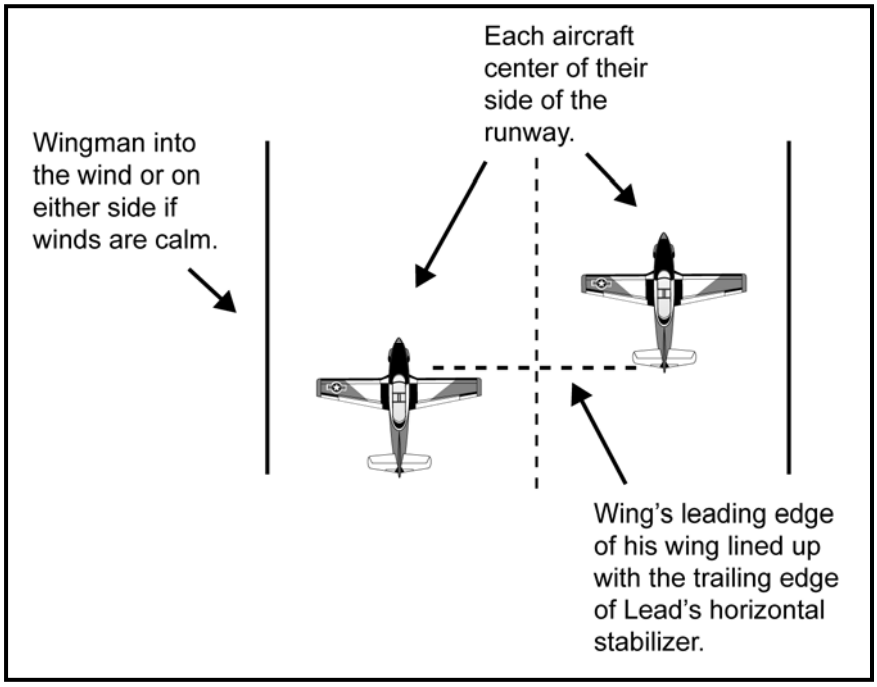


**Figure 2-4 Runway Lineup**

**Figure 2-5 Runway Lineup Picture**

2. **Runup and Takeoff.** Once the section is in position and cleared for takeoff, lead will pass the runup signal, and wing will acknowledge with a head nod. Both aircraft will set 500 ft-lbs and check for safety of flight items and proper instrument indications (essentially the same checks you would do for an individual takeoff). When Wing is ready for takeoff, he will do a **quick** visual inspection of Lead and if he looks good, pass a thumbs-up to Lead. Lead will return the thumbs-up in response (or thumbs-down as appropriate), look forward, pass the "kiss-off" signal, and proceed with a normal takeoff as per the Contact Flight Training Instruction (FTI) while maintaining his side of the runway. Wing will count five seconds (this will allow approximately 300 feet of separation between aircraft) and then proceed with a normal takeoff while maintaining his side of the runway.

## 203. INBOUND TO PARKING AFTER LANDING

1. Lead will clear the runway hold-short line and allow enough space for Wing to clear the runway as well. Once clear of the landing runway and hold-short line, both aircraft will automatically switch to the ground frequency, and then Lead will check Wing in and contact ground.

2. The formation will taxi back to parking in accordance with local SOP/Course Rules.

THIS PAGE INTENTIONALLY LEFT BLANK

# CHAPTER THREE
# SECTION PARADE

## 300. INTRODUCTION

Parade is the fundamental position in formation flying. The rest of your military formation flying career will be based on the skills learned in maintaining this basic position. The skill set you develop in Primary Formation will help improve all of your skills as an aviator.

## 301. RADIO FREQUENCY CHANGES

Formation flying requires Lead to direct all flight members to the appropriate radio frequencies simultaneously. Radio frequency changes will take longer in a formation flight, so Lead should plan accordingly. Every frequency change in formation is going to be a three-step process.

1. Give the command to go to the new frequency (visually or on the radio).

2. Check in Wing on the new frequency.

3. Talk to the new controller (if necessary).

The Wingman will be required to make frequency changes while maintaining the proper formation position. For preset frequency changes, Wing can keep his eyes on Lead while rotating the preset knob and counting "clicks." Wing should then glance quickly down to verify the correct preset frequency. For manual frequency changes, Wing should set one frequency knob at a time while keeping his eyes on Lead. Take quick glances down to verify the correct manual frequency.

**NOTE**

Initial contact with each new ATC controller <u>shall</u> include the number of aircraft in the flight.

**Frequency Change Procedure Over The Radio.**

1. Lead will send the flight to the new frequency on the radio.
   **Lead**: "[Tac Callsign], switch channel 3."

2. Wing will respond to the switch.
   **Wing**: "Two."

3. Lead will allow the Wingman time to switch frequencies and then check in the formation on the new frequency when there is a break in transmissions.
   **Lead**: "[Tac Callsign]."

4. Wing will respond to the check-in.
**Wing**: "Two."

5. Lead should listen for a break in transmissions and then talk to the new agency if applicable.

Example: "Corpus approach, Boomer 723, flight of two with information alpha."

**Frequency Change Procedure Via Visual Signals.**

1. **Lead**

a. Lead will check Wing in position and area clear. Wing should recognize something is **about** to be commanded for the formation.

b. Lead passes the introductory signal for radio frequency change by tapping his helmet near the earphone three times.

c. Lead passes the frequency to Wing. If the frequency is a preset, Lead will hold the number of fingers up for channel the section is switching to. If the frequency is manual, Lead will give the manual frequency preparatory signal, then pass the manual frequency one number at a time. (See Chapter 9 for an expanded explanation).

d. Lead should look forward to clear for the formation as he passes the visual signal. Once the signal is passed, Lead will quickly glance at Wing to look for an acknowledgement the signal was received and understood. (*Wing will acknowledge with a head nod).*

2. **Wing**

a. Observe Lead's frequency change signal. When Lead looks over, Wing will acknowledge the signal with a head nod. Wing will shake off the signal if he does not understand the frequency given by Lead.

b. Switch to the new frequency while maintaining the parade position.

3. Lead will allow the Wingman time to switch frequencies and then check in the formation on the new frequency when there is a break in transmissions.
**Lead**: "[Tac Callsign]."

4. Wing will respond to the check-in.
**Wing**: "Two."

5. Lead should listen for a break in transmissions and then talk to the new agency if applicable.

Example: "Corpus approach, Boomer 723, flight of two with information alpha."

## 3-2 SECTION PARADE

**Common Errors**

1. Lead does not give Wing enough time to set a new frequency (i.e., checks in Wing immediately after commanding the frequency change).

2. Lead does not provide a stable formation platform for Wing during a frequency change (poor Wingman consideration).

3. Lead "steps" on people on the new frequency in order to accomplish the check-in immediately.

4. Lead becomes distracted with the check-in procedures and does not respond to critical radio calls.

**NOTE**

If Wing is slow to switch frequencies, Lead may need to start talking/coordinating on the radios and then, when time allows, check in Wing.

5. Wing flys an erratic parade position during frequency changes because of a slow cross-check between Lead and the radio.

## 302. DEPARTURE/PARADE SEQUENCE/RECOVERY PHASE OVERVIEW

**Departure Phase.** Prior to commencing the parade sequence, the Lead will establish the flight in the working area (see local course rules for home field departure procedures). Lead is responsible for planning and completing the departure phase, which consists of the following:

1. Ground Operations

2. Interval Takeoff

3. Running Rendezvous

4. Climb and Level Off

5. Radio Channel Changes

6. Establish Flight in the Working Area

7. Conduct a Fuel Check

**Parade Sequence.** Once established in the working area, the parade sequence may be commenced. Both Lead and Wing are responsible for completing the following maneuvers during the flight. Lead has the prerogative to change the sequence of maneuvers (in-flight plan) to keep the formation clear of clouds, to maintain area boundaries, etc. A suggested Parade Sequence is provided below.

1. Parade Turn Exercise (four turns)

2. Crossunder

3. Parade Turn Exercise (four turns)

4. Crossunder

5. Fuel Check

6. Breakup and Rendezvous Exercise

7. Cruise Turns (only F4004 and F4005)

8. Lead Change

**Recovery Phase.** Once the original leader has resumed the lead, the recovery phase may commence. (See current SOP/Course rules for home field entry procedures).

1. Fuel Check

2. Obtain Automatic Terminal Information Service (ATIS)

3. Descent and Level Off

4. Radio Channel Changes

5. Homefield Entry

6. Homefield Break

## 303. RUNNING RENDEZVOUS

The method used to join aircraft into formation after an interval takeoff is the running rendezvous. The running rendezvous is primarily a “power rendezvous” in which all aircraft in a flight take off in order and effect their join up while the leader is departing.

**The Leader.** After takeoff, Lead will fly the departure in accordance with local course rules and should concentrate on maintaining a stable platform and course rules airspeed. Once safely airborne and above 300 feet above ground level (AGL), Lead should retard the power a sufficient

amount to allow Wing a closing advantage during the climbout. Maintain 120 KIAS with this reduced power setting. If a turn is required prior to the Wingman rejoining, then Lead will use no more than 20º of bank. As Wing approaches the parade position on the starboard side, Lead will smoothly set power as required (850 ft-lbs maximum) and continue the departure. Lead should make all power adjustments at a slow constant rate.

**The Wingman.** Once safely airborne, adjust the angle of bank as necessary to establish the aircraft inside Lead's turn, maintaining Lead slightly above the horizon throughout the rendezvous. When Lead rolls out wings level, there will no longer be the closing advantage provided by radius of turn so now the joinup will be a function of airspeed differential. Once Lead is rolled out, maneuver to the starboard side of Lead and put him at the 11 o'clock position with at least 20 feet of stepdown. The Lead's wing should initially cover the exhaust stack (Figure 3-1).

**Figure 3-1 Initial Running Rendezvous Picture Wing Covering Exhaust Stack**

Use power to control the closure rate approaching lead. Closure can be difficult to judge with a tail aspect, so reference your airspeed indicator to help determine your closure rate. As a rule of thumb, use about 10 knots per T-34C length as a guide for airspeed closure. In other words, if Lead is flying 120 KIAS, be no more than 140 knots at two T-34C lengths. Be no more than 130 knots at one T-34C length. **Do not exceed 170 knots during the Running Rendezvous.**

At approximately three plane lengths out or when you can read the "Navy/Marines" on Lead's aircraft, utilize coordinated power and control inputs to first move to and then stabilize beneath the starboard parade position with 20 feet of stepdown (Figures 3-2 and 3-3). **In the 20 feet of stepdown position, the "ventral point" will be over the opposite "cutout," with the "prop arc" under the "midpoint" of the starboard wing, and the trailing edge of the starboard exhaust stack tangent to the leading edge of the starboard wing.** After stabilizing in this

position, simultaneously add a small amount of power and back stick pressure to move up into the starboard parade position.

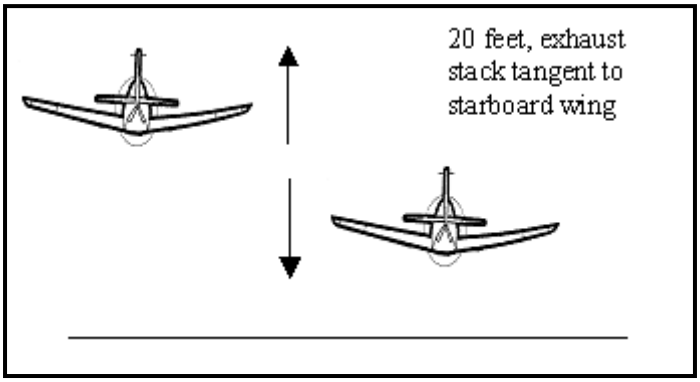


**Figure 3-2 20 Feet of Stepdown**

**Figure 3-3 20 Feet of Stepdown**

**Underrun.** If the Wingman fails to recognize a rapid closure rate and is unable to stop beneath the parade position, the underrun procedure shall be executed. During the underrun, Wing should maintain adequate stepdown and keep Lead in sight. (**See Section 313 for the underrun procedures).**

**Common Errors**

**Lead**

1. Allows airspeed to wander, setting Wing up for an underrun or delaying the rejoin.

2. Excessive Wingman consideration. Lead loses track of the course rules departure and does not comply with altitudes and headings.

3. Lack of Wingman consideration. Being erratic or abrupt with level offs and roll rates.

## 3-6 SECTION PARADE

**Wing**

1. Fails to trim for increasing airspeed.

2. Wing exceeds 170 knots.

3. Misjudges relative motion and closure, causing Wing to either stagnate or underrun prior to reaching the 20 feet stepdown position.

4. Misjudges relative motion during the underrun resulting in excessive separation.

**Running Rendezvous Keys to Success:**

**Lead**

Be a stable platform while complying with course rules departure.

**Wing**

1. Use proper takeoff interval.

2. Avoid high closure rates.

3. Maintain proper stepdown at all times.

4. If uncomfortable with the closure rate, execute the underrun procedures.

5. Trim for the increasing airspeed and retrim after stabilizing in position.

## 304. PARADE POSITION

Parade formation is used for flight in congested areas, traffic patterns, instrument conditions, demonstrations, etc. The advantages are that it requires a minimum of airspace, provides good visual communications between aircraft in the flight, is easily and positively controlled by Lead, and presents a neat military appearance. The disadvantages are that it provides less maneuverability than single aircraft flights, requires almost constant power adjustments by the Wingman, is fatiguing if conducted for long periods, and inhibits proper lookout doctrine by the Wingman.

The parade position is defined as “a fixed position on the 45º bearing line on either the port or starboard side of Lead.” **The parade position is described as approximately 10 feet of stepdown beneath the leader, 20 feet of nose-to-tail clearance, and 4 feet of wingtip separation. If positioned properly for the parade position, the Wingman will see Lead's prop arc bisecting Lead's inboard wing (the “midpoint” of that wing), the “ventral point” on the opposite aileron cutout, and the exhaust stack hidden by the wing** (Figure 3-4). Wing must strive to always “zero out” the relative motion between aircraft.

**Figure 3-4 The Starboard Parade Position**

## 305. RELATIVE MOTION

Essentially, formation flying is nothing more than controlling the relative motion between aircraft. To maintain a fixed position (the parade position for example), the Wingman's goal is to stop all relative motion between aircraft. In order for Wing to do this, he must consider Lead as fixed in space and any movement between aircraft is considered as movement of the Wingman in relation to the Leader. To maintain parade position, the Wingman must correct for relative motion between aircraft with smooth, timely control inputs. Wing must learn to judge bearing, distance, and relative motion to anticipate the control inputs required and avoid fixating on any one particular part of the Lead's aircraft. **Scan Lead's entire aircraft, don't just use the ventral point, prop arc, and exhaust stacks.**

Relative motion can be resolved into movement about any one or a combination of all three axes. Primarily, elevator controls vertical movement, power controls fore and aft movement, and aileron controls lateral movement. When flying in the perfect parade position, the Wing aircraft will maintain a 45º bearing from Lead (Figure 3-5).

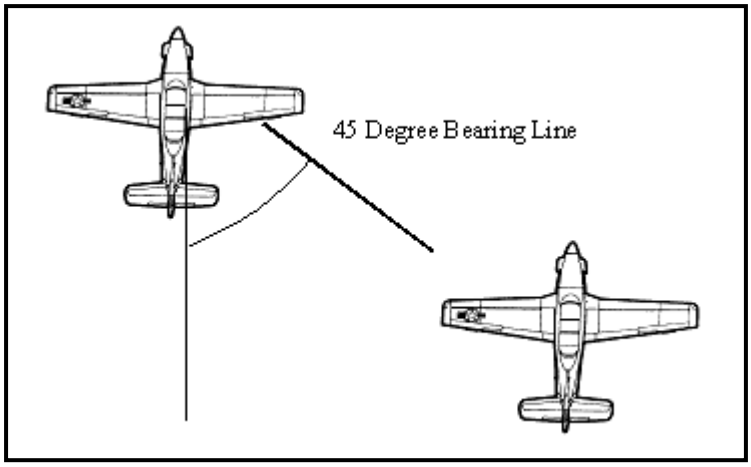


**Figure 3-5 45º Bearing Line in the Parade Position**

## 306. FLYING PARADE AS WING, ERROR DETECTION, AND CORRECTION

Early detection and correction of errors in relative position is essential to precise formation flying. The Wingman must be able to quickly recognize an error exists by noting relative motion or deviation from the established checkpoint. The Wingman then must make prompt and appropriate action to correct the error. Each correction actually requires three separate actions: one to initiate movement toward the desired position, one to arrest the aircraft's momentum once the position has been achieved, and finally one to maintain the desired position. Ideally, error corrections should be frequent and relatively small, requiring only slight stick pressures and minimum PCL movement. It is therefore imperative the aircraft be properly trimmed while flying in the parade position.

**Wing should correct position errors in three distinct phases: first for stepdown, second for bearing, and third for relative closeness.** As proficiency increases, the Wingman will be able to correct for all simultaneously, but for starters, correct in this order.

1. **Stepdown.** Proper stepdown while in the parade position consists of 10 feet of vertical separation between the Lead and Wing aircraft. Corrections for errors in stepdown are accomplished primarily by application of fore and aft stick pressure. If the Wingman's stepdown is insufficient, then the "cutout" will be hidden by the lead aircraft's fuselage and the exhaust stack will be visible above the wing (Figure 3-6). Insufficient stepdown is a potentially dangerous condition and should be corrected immediately. Slight forward stick pressure is required to correct insufficient stepdown. If the Wingman's stepdown is excessive, there will be sky visible between the "ventral point" and the "cutout." The exhaust stack will also be visible under the wing (Figure 3-7). Use slight back stick pressure to correct for excessive stepdown.

**Figure 3-6 Insufficient Stepdown**

**Figure 3-7 Excessive Stepdown**

2. **Bearing.** Properly aligning the “ventral point” on the aileron cutout and the prop arc bisecting the inboard wing will line up the wing aircraft on a 45º bearing from Lead (Figure 3-8).

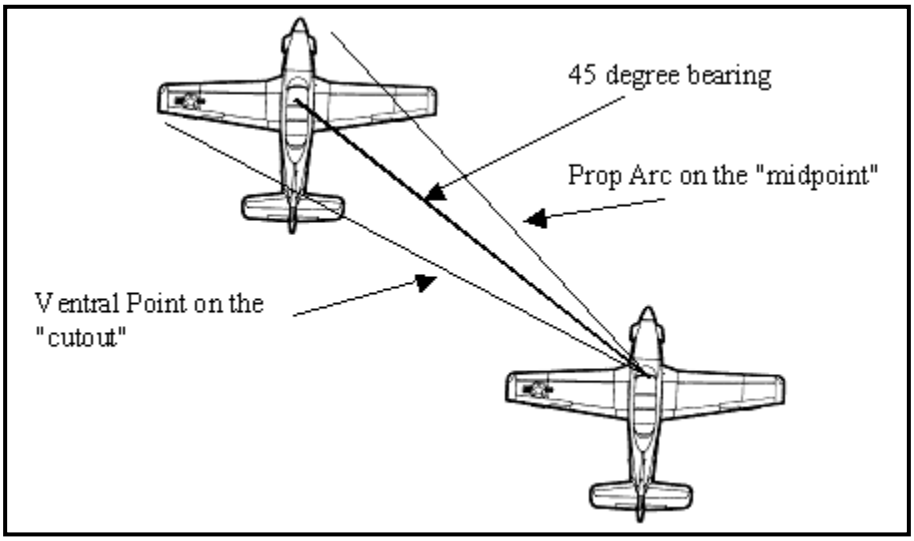


**Figure 3-8 Intersection of Prop Arc on the Midpoint and Ventral Point on the Cutout**

A condition where Wing is incorrectly positioned aft of the bearing is referred to as “sucked.” The opposite condition, where Wing is incorrectly positioned forward of the bearing, is referred to as "acute." To correct bearing, first ensure the stepdown is correct and then position the aircraft to the bearing line and stabilize. Once stabilized, utilize a combination of power and aileron to maintain that bearing line while correcting for relative closeness. Your instructor will demonstrate common parade bearing errors (Figures 3-9 through 3-12) and proper corrections during F4001.

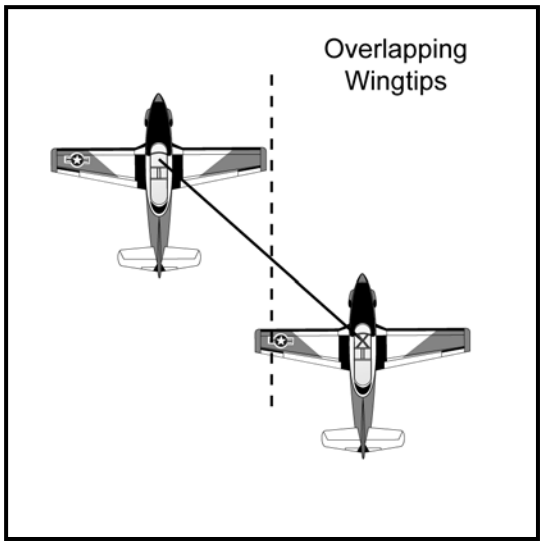

**Figure 3-9 "Sucked" With Aileron (Insufficient Lateral Separation)**

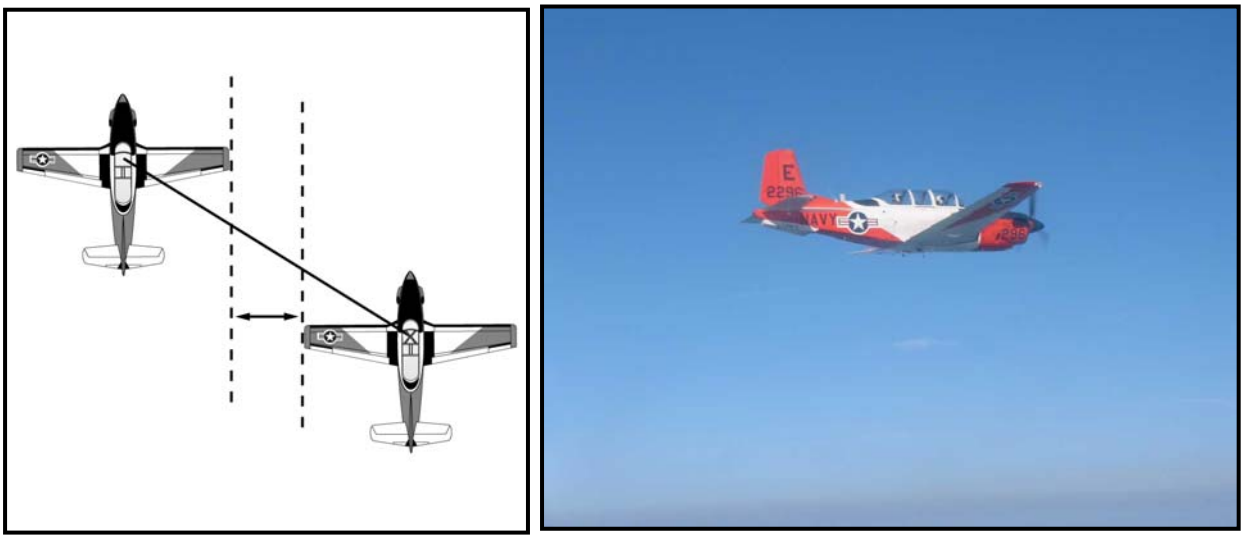

**Figure 3-10 "Acute" With Aileron (Excessive Lateral Separation)**

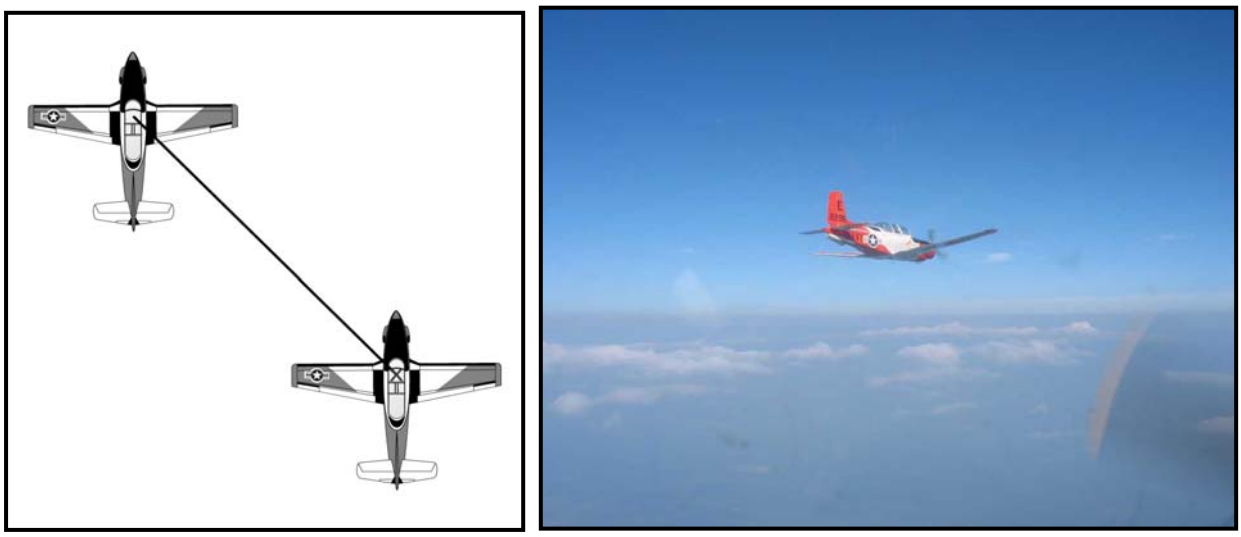

**Figure 3-11 "Sucked" With Power (Excessive Nose-Tail Separation)**

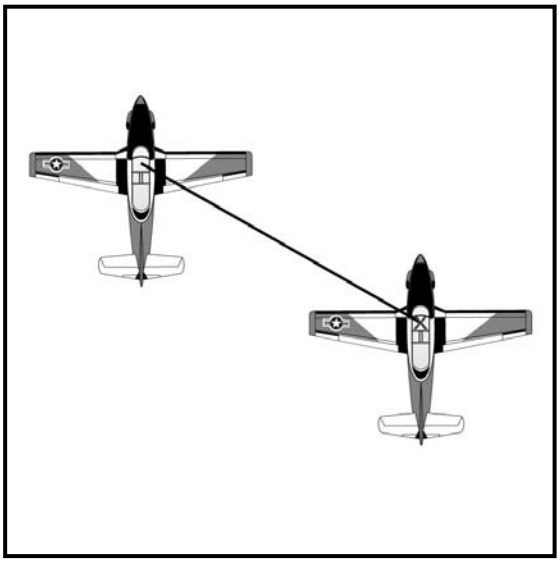

**Figure 3-12 "Acute" With Power (Insufficient Nose-Tail Separation)**

3. **Relative Closeness.** Once stepdown is achieved and bearing established, the last ingredient to the parade position is the relative closeness between aircraft (Figure 3-13). Determine relative closeness by scanning Lead's entire aircraft, not just the prop arc over the midpoint. Use aileron and power to move up and down the bearing line to set the proper distance from Lead.

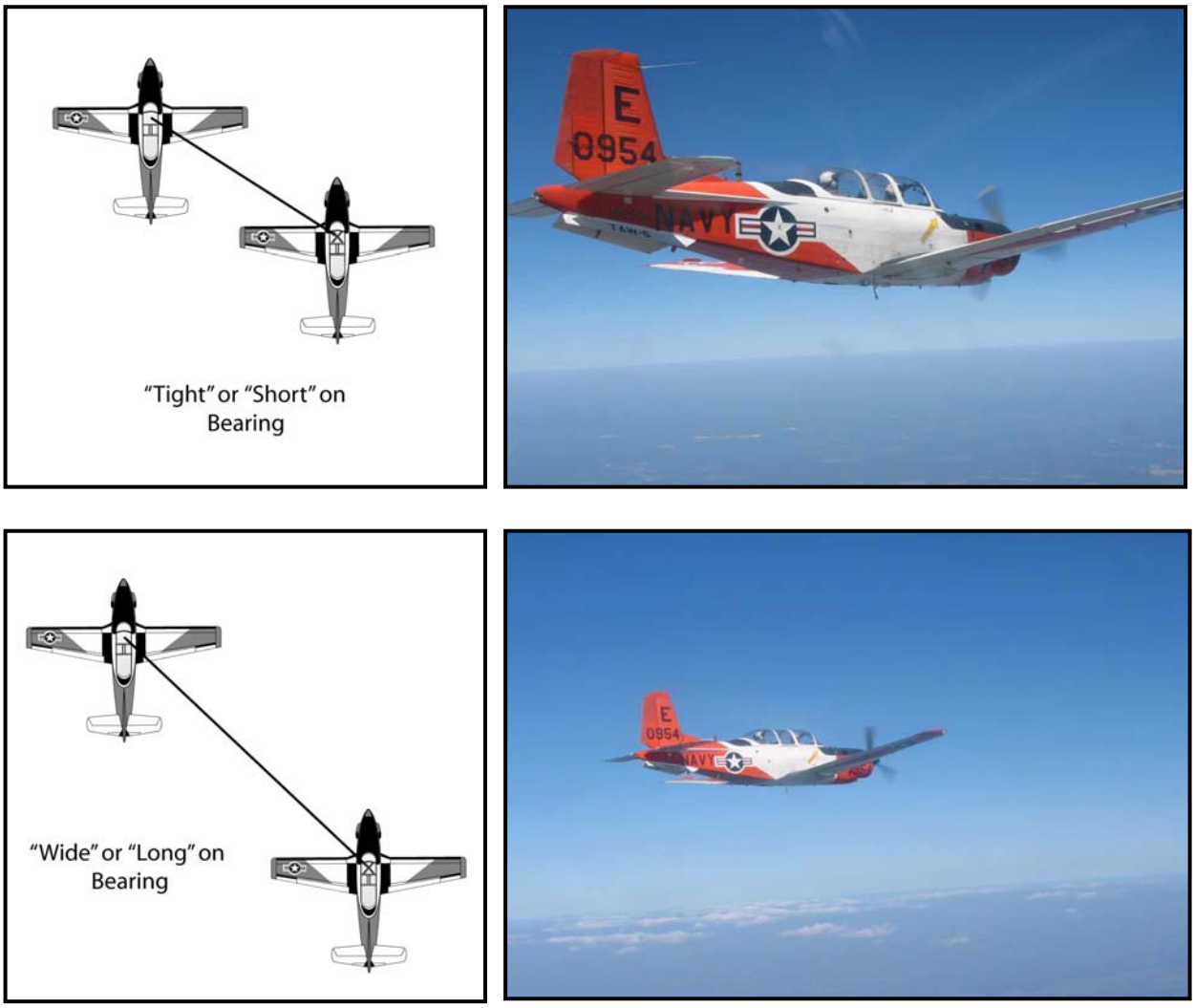


**Figure 3-13 Deviations Off Bearing**

**Common Errors**

1. Overcontrolling and/or overcorrecting for position or relative motion errors.

2. Correcting for bearing or relative closeness prior to achieving proper stepdown.

3. Failing to recognize departures from the proper position quickly enough to make small and timely corrections.

4. Allowing the aircraft to drift on the wing due to the deviation recognition/correction input process being too slow.

5. Fixating on one bearing checkpoint while disregarding the other.

## 3-14 SECTION PARADE

**Keys to Success**

1. If unstable, back out and stabilize relative to Lead, then move back in.

2. Maintain stepdown and bearing.

3. Always strive to be in position or working towards position in small increments.

4. Keep relative motion zero; scan Lead's entire aircraft in addition to parade references.

5. If Wing needs to look away from Lead (radio channel changes, fuel and instrument checks), Wing should use quick deliberate glances.

## 307. DEPARTURE

**Lead.** Lead is responsible for getting the section to and from the area safely by complying with local course rules, responding to radio calls, and clearing for the formation. Once Wing is in the parade position on the starboard side, Lead will smoothly set power as required (850 ft-lbs maximum) and continue the departure. Lead should make all power adjustments at a slow constant rate and use the parade rate of roll for turns. As the section approaches the level off altitude for the departure, Lead will initiate a smooth level off approximately 200 feet prior to the desired level off altitude. **Lead will smoothly establish 150 KIAS (approximately 630 ft-lbs) entering the working area.**

**Wing.** After takeoff, the Wingman's primary goal is to get into position as expeditiously and safely as possible. Once established in position, Wing will always work to maintain the parade position. Lead should be smooth enough during the course rules departure that any transitions (climbs, power additions/reductions, level-offs, turns, and rollouts) are easy to follow. Wing should maintain situational awareness through the departure to help anticipate transitions and maintain position.

**Common Errors**

**Lead**

1. Lack of Wingman consideration. Lead being too abrupt with controls and power.

2. Excessive Wingman consideration. Lead allowing Wingman consideration to cause mistakes on the departure (headings, altitudes, radio calls, etc.).

3. Poor radio procedures. Lead forgetting to switch or check in the Wingman.

**Wing**

1. Wing taking too long to get into position after takeoff.

2. Wing failing to recognize deviations from parade position and therefore failing to make timely/appropriate corrections.

3. Wing overcontrolling the aircraft, causing an unstable parade position.

4. Wing missing radio changes or radio check-ins.

## 308. FUEL CHECK

Lead will initiate all fuel checks. As a minimum, fuel checks will be accomplished as a section at the following times (see Section 302 for examples):

1. On the departure phase, before commencing the area work.

2. At least once during the first parade profile.

3. After the lead change.

4. At least once during the second parade profile.

5. Before commencing the recovery phase.

**Lead**

1. Lead will check Wing in position and the formation flight path clear and then pass the fuel check signal while still clearing for the formation (Figure 3-14).

2. After Lead passes the signal, he will look at Wing for a head nod acknowledgement.

3. Lead will check engine instruments, fuel quantity, and position within the area (IGP).

4. Lead will allow Wing enough time to complete the fuel check before continuing the profile.

**Figure 3-14 Fuel Check Signal**

**Wing**

1. Wing will acknowledge the fuel check signal with a head nod when Lead looks.

2. Wing will check engine instruments, fuel quantity, and ball centered (IGB). Wing must maintain the parade position during the fuel check so Wing must "time share" his attention between flying formation and cross-checking the instruments to get the fuel check done.

**Common Errors**

**Lead**

Lead does not give Wing enough time to get the check done.

**Wing**

1. Wing flies an erratic position during the check.

2. Wing stares inside the cockpit too long to read indications instead of taking quick glances.

3. Wing takes too long to get the check done.

## 309. THE PARADE SEQUENCE

Once the section is established in the area and the fuel check is complete, it is time to execute the mission. The mission in Basic Formation is to execute the maneuvers in the Parade Sequence. Both flight members must work together to complete the following maneuvers as part of the Parade Sequence.

1. Parade Turns, 4 per wing, minimum of 180º per turn

2. 2 Crossunders

3. Breakup and Rendezvous Exercise

4. Cruise Turns (Forms 4004-4005 only)

5. Lead Change

6. Repeat Sequence

7. Return to Base

**Lead**. Lead is responsible for completing the maneuvers in the Parade Sequence. Lead may accomplish the maneuvers in any order and may conduct turns and breakup and rendezvous to the left or right (see suggested Parade Sequence in Section 302). Lead should always consider area management, winds, and weather to develop an efficient flow of maneuvers to minimize any wasted time or extra turns. For instance, Lead may choose to execute the breakup and rendezvous to the right in order to work towards the center of the area or away from weather.

**Wing**. Wing's job in the area is to maintain the position commanded by Lead at all times. Wing must also execute Lead's commands as safely and expeditiously as possible to avoid undue delay. If Wing is taking too long to execute Lead's commanded maneuvers, it disrupts Lead’s capability to in-flight plan and execute the mission within the area.

## 310. PARADE TURN EXERCISE

The Parade Turn Exercise is defined as a series of four 30º angle of bank (AOB) turns (some 45º angle of bank turns may be directed by your instructor) in alternating directions. The turns should be accomplished in sequence, each for a minimum of 180º of turn. Four turns will be accomplished per side (i.e., four turns with Dash-2 on the left wing, four turns with Dash-2 on the right wing).

**Lead.** Lead should have the formation set at 150 KIAS prior to commencing the turns. During the turns, Lead will hold altitude and airspeed at 150 KIAS. Lead should make small smooth torque adjustments as necessary to maintain airspeed if altitude deviations occur. Lead may place the Wingman on either side prior to the turns and may start the turns in either direction. Lead should consider area management, weather, winds, minimizing Wing's exposure to the sun, etc. to determine the direction of turn and which side to place Wing.

During the turns, Lead should focus on being a smooth platform and will utilize the “parade rate of roll” when rolling into and out of bank. **The parade rate of roll is defined as rolling at a rate that achieves 30º angle of bank after 30º of turn**. Turns will be made in alternate directions. For area planning purposes, if the first parade turn in the exercise is to the left, then the direction of movement of the formation will be to the left. Turns can be continuous or "linked" after F4002 at the discretion of the Instructor Pilots so long as Wing is able to maintain position.

**Wing.** Wing is required to maintain a fixed position in relation to Lead in turns and therefore should be cognizant of all relevant factors when two aircraft are turning together. Wing will need to apply the concepts of radius of turn and relative motion to maintain position.

**Turns Into Wing**

As Lead rolls into an angle of bank, Wing will match Lead’s angle of bank and **maintain the same parade references as straight and level flight**, ventral point on the cutout, exhaust stack hidden by the wing, and propeller arc on the midpoint. The difference between turns into Wing and flying straight and level has a lot to do with the fact that *the Wingman is on a slightly shorter turn radius than Lead*. If Wing is flying the same airspeed as Lead but with a shorter turn radius, he is going to turn through space slightly faster than Lead and will therefore tend to get ahead of the bearing line (acute). Wing must initially reduce power a small amount to maintain position and then modulate power to hold position. To roll about the Lead's longitudinal axis (Figure 3-15), Wing will have to lower the nose slightly while reducing power and matching Lead's roll rate. To roll out, Wing will need to add a small amount of power while pulling the nose up slightly to maintain the parade checkpoints.

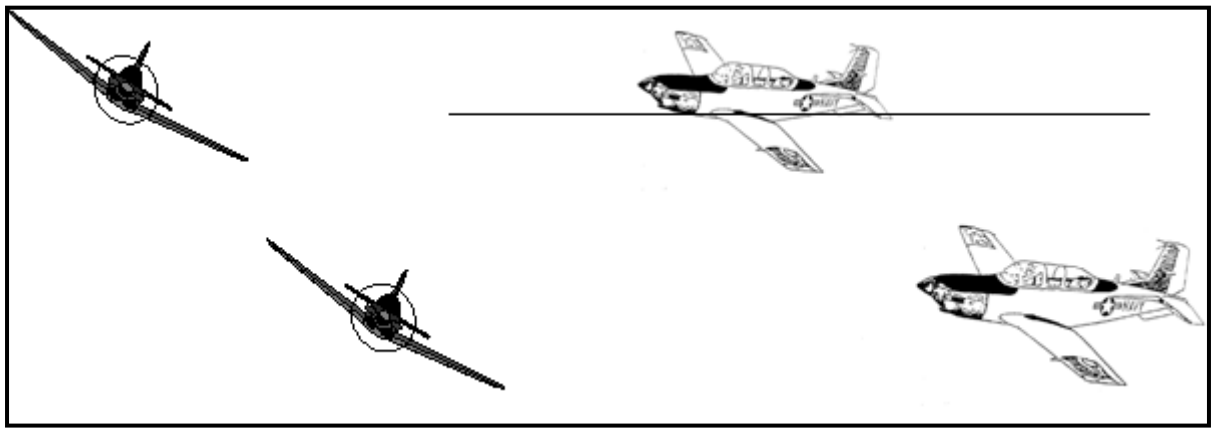

**Figure 3-15 Parade Turns Into**

**Common Errors During Turns Into Wing**

1. Lead fails to clear the area visually prior to commencing a turn.

2. Lead fails to maintain altitude and constant AOB in the turn.

3. Lead rolls into or out of turn abruptly or ratchets AOB rolling into or out of turn (i.e., stops roll at 10 to 20 degrees AOB on the way to 30°).

4. Lead overshoots the rollout heading or exceeds parade rate of roll.

5. Wing fails to rotate about Lead's longitudinal axis to maintain proper stepdown.

6. Wing fails to reduce power slightly to take into account the shorter turn radius effect discussed above; Wing gets acute as a result and does not detect relative motion.

7. Wing fails to add sufficient power upon roll out to prevent becoming sucked.

**Turns Away From Wing (VMC)**

As Lead rolls into bank, Wing will match Lead's rate of roll and rotate about his own longitudinal axis (Figure 3-16). To help the transition from straight and level to the turn away picture, match Lead's roll rate while placing the underside of Lead's fuselage on the horizon and keep the ventral point over the opposite wing aileron cutout.

Once the turn is established, Wing is now on a longer radius of turn than Lead and will have to use a combination of power, aileron, and a small amount of back stick pressure to maintain position. In the proper turn away reference, the underside of Lead's fuselage will be on the horizon and the ventral point is directly over the cutout (Figure 3-17). To make corrections, use a combination of aileron and backstick pressure to maintain relative closeness and hold the Lead's fuselage on the horizon. Power should be used to move forward or aft to keep the point over the cutout. Wing should be close enough to Lead so that when the rollout occurs, Wing will be in the parade position.

When Lead initiates the rollout, Wing will need to undo the corrections used to establish the turn away position. Roll out with Lead, matching his roll rate, turning about your own longitudinal axis at a rate that allows you to maintain proper bearing and reduce power as necessary. As Lead approaches wings level, focus on reattaching the opposite wing cutout, back to the ventral point. Make small corrections to reestablish position after the rollout is complete.

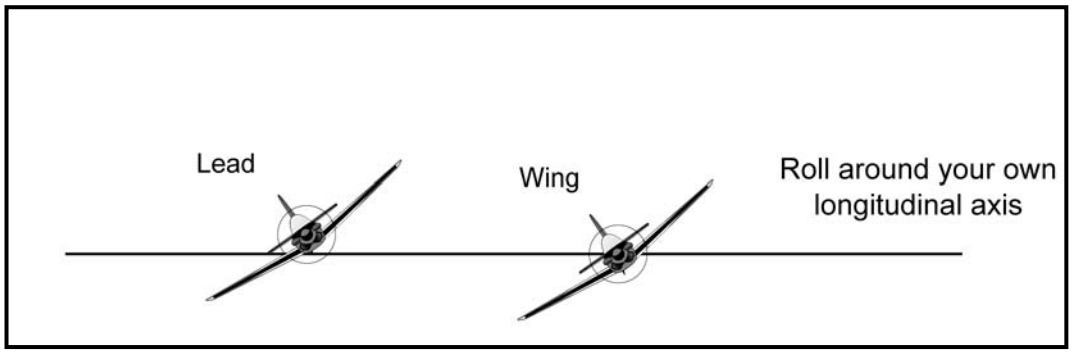


**Figure 3-16 Turns Away (VMC)**

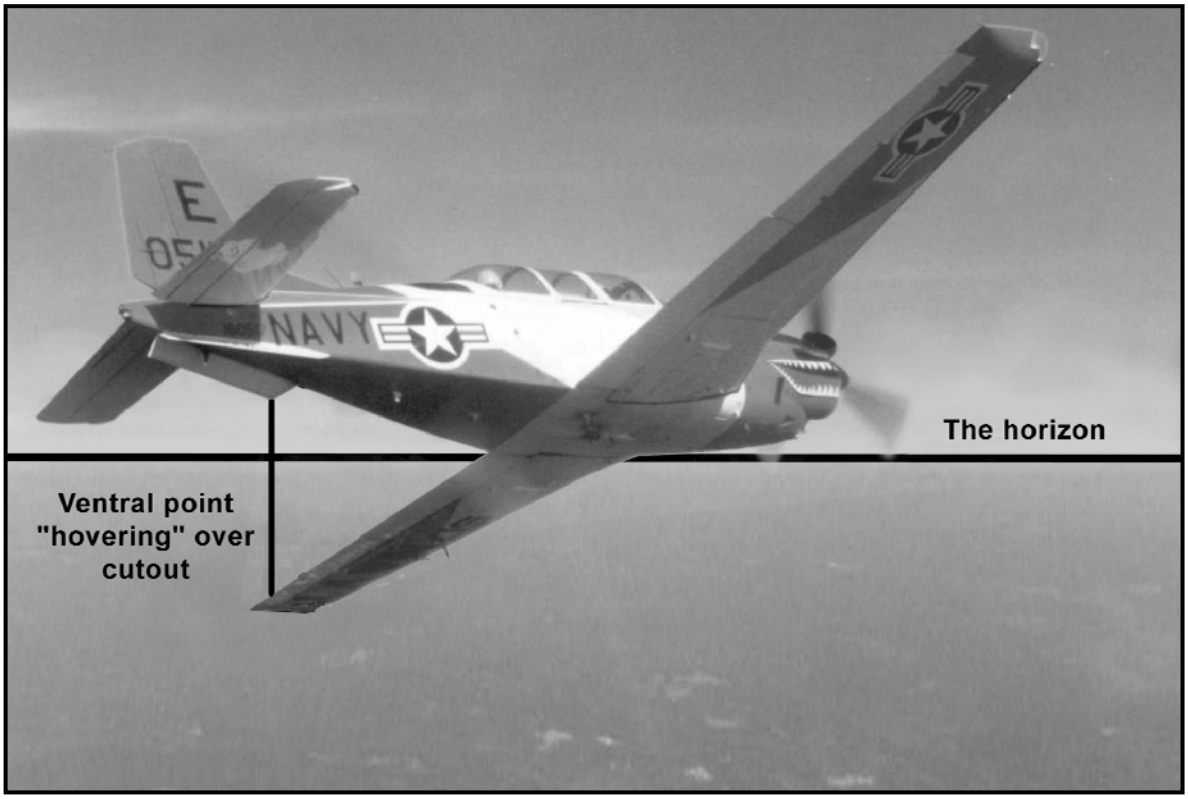


**Figure 3-17 References for Turns Away (VMC)**

**Common Errors During Turns Away From the Wingman (VMC)**

1. Same Lead common errors as during turns into Wingman.

2. Wingman fails to match Lead's bank angle and maintain stepdown.

3. Wing is slow to add power and gets "sucked."

4. Wing fails to maintain relative closeness and drifts away from Lead.

5. Wing fails to reduce power upon rollout sufficiently to prevent becoming acute.

6. Wing fails to pick up the parade references and rolls out with excessive stepdown.

**Forty-Five Degree Angle of Bank Turns**

Forty-five degree angle of bank turns will be accomplished when directed by the Instructor. Lead should use a slow, smooth roll rate to 45º angle of bank, concentrating on holding altitude throughout. As Wing, the effects of your corrections will show up a little faster at higher angles of bank so you are going to have to be more aggressive about detecting deviations from the proper position and making the proper corrections. The references and common errors for the 45º angle of bank turns are exactly the same as the 30º angle of bank turns.

## 311. CROSSUNDER

The goal of the crossunder is to move Wing from the parade position on one side of Lead to the other side (Figure 3-18). In the Parade Sequence, Lead is required to crossunder Wing a minimum of two times (one of these times will be during the Parade Turn Exercise). Lead may also need to conduct a crossunder for area management, to minimize Wing's exposure to the sun, during the breakup and rendezvous exercise, or during the return to base.

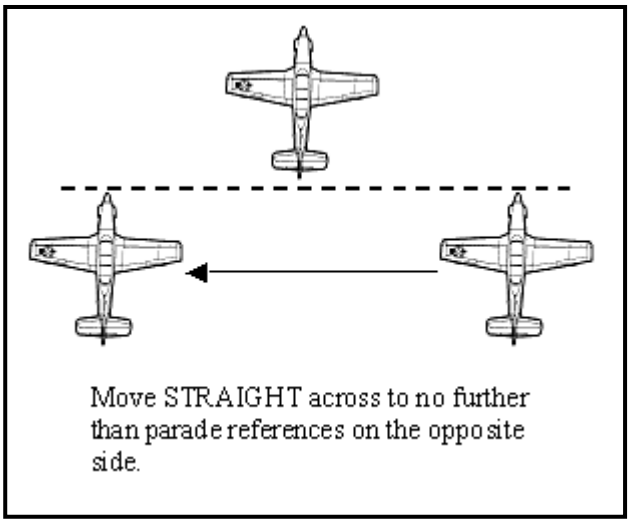


**Figure 3-18 Crossunder**

**Lead.** Lead will maintain a steady platform during the crossunder.

1. Check Wing is in position and area clear.

2. Pass the Crossunder signal and receive acknowledgement from Wing (Figure 3-19).

**Figure 3-19 The Crossunder Signal**

**Wing.** Wing will acknowledge the cross under signal with a head-nod and stabilize in the parade position prior to commencing the maneuver. Wing should cross under using straight lines. First straight down to 20 feet of stepdown, straight across to the other side (while maintaining constant nose-tail clearance), and straight up into the parade position. Throughout the crossunder keep relative motion slow and controlled.

1. Observe the signal Lead passes and acknowledge with a quick head-nod.

2. Stabilize in the parade position.

3. Increase stepdown to 20 feet by using slight forward stick pressure to descend straight down until the trailing edge of the Lead's exhaust "stack" on your side is tangent to the leading edge of that wing and the ventral point is directly over the cutout (Figure 3-20). Wing may need to reduce power momentarily to avoid becoming acute as he steps down to 20 feet.

**Figure 3-20 20 Feet of Stepdown**

4. Once stabilized with 20 feet of stepdown, make a slight wing dip towards Lead moving slowly to the other side. Adjust power as necessary to ensure you move straight across to the other side WITH 20 feet of NOSE-TO-TAIL CLEARANCE. At no time should Wing's nose be under any part of Lead's aircraft. Wing's goal is to crossunder to the parade position on the other side of Lead maintaining the 20 feet of stepdown and not drifting lower or higher than Lead's exhaust stacks tangent to the leading edge of his wings (but no further forward than nose-tail clearance). The crossunder rate should be no faster than a walking pace (Figure 3-21).

5. Crossunder to the opposite wing, maintaining 20 feet of stepdown (Figure 3-22). Arrest lateral motion with a slight wing dip toward lead approaching the opposite bearing line. Momentarily stabilize with 20 feet of stepdown on the opposite bearing line.

6. Use slight back stick pressure and add a little power to move your aircraft straight up into the parade position on the new side of Lead. “Reattach” the ventral point to the opposite wing aileron cutout and reestablish the parade references.

**Figure 3-21 Move Across to Other Side With Nose-Tail Clearance**

**Figure 3-22 Align Ventral Point over Cutout on Other Wing**

**Common Errors**

**Lead**

Lead fails to maintain a steady platform due to poor basic aircraft control.

**Wing**

1. Wing fails to stabilize momentarily in each position prior to moving on to the next position.
2. Wing fails to adjust power and allows his aircraft to drift aft or under Lead.
3. Wing uses excessive bank and crosses under too fast from one side to the other.
4. Wing fails to maintain 20 feet of stepdown during crossunder maneuver.

5. Wing is slow to arrest lateral motion which results in Wing crossing too far to the other side.

6. Wing arrests the lateral relative motion prior to arriving on the opposite bearing line and stabilizes under Lead's wing.

## 312. BREAKUP AND RENDEZVOUS EXERCISE

The breakup and rendezvous exercise separates the formation so that you can practice rendezvous procedures. The concepts of radius of turns, bearing line, and pursuit curves are critical to controlling closure rates and executing proper rendezvous procedures.

**Radius of Turn (Figure 3-23).** An aircraft's radius of turn is a function of bank angle and airspeed. Higher bank angles have a shorter turn radius and lower bank angles have a larger turn radius. Airspeed comes into play as well; an aircraft at 20º of bank at a high airspeed is going to have a much larger turn radius than one at a slower airspeed.

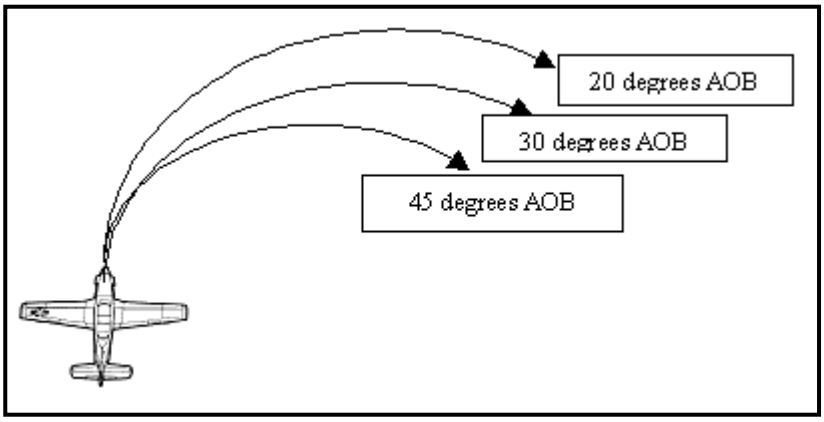


**Figure 3-23 Radius of Turn**

**Bearing Line (Figure 3-24).** Bearing line is a coordinate system referenced from Lead's tail. It helps you detect performance when rejoining on Lead while he is in a turn. The convention is that Lead's tail is 0º and Lead's nose is 180º.

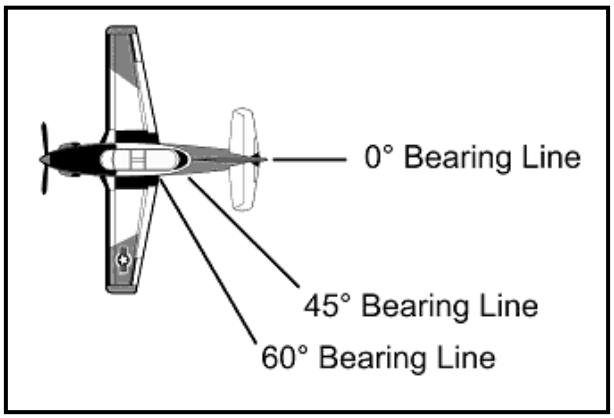


**Figure 3-24 Bearing Line**

**Pursuit Curves.** Pursuit curves are used to describe Wing's closure as he maneuvers relative to Lead. For example, if Lead is in a turn and the nose of Wing's aircraft is pointed ahead of Lead's aircraft, closure is generated, ultimately resulting in Wing passing in front of Lead; we call this "lead pursuit" (Figure 3-25). On the other hand if Wing points the nose of the aircraft behind Lead while in a turn, then closure on Lead should slow and Wing should pass behind Lead, this is "lag pursuit" (Figure 3-26). Finally, if Wing points the nose of the aircraft directly at Lead, only a small amount of closure will be created and we call this “pure pursuit" (Figure 3-27).

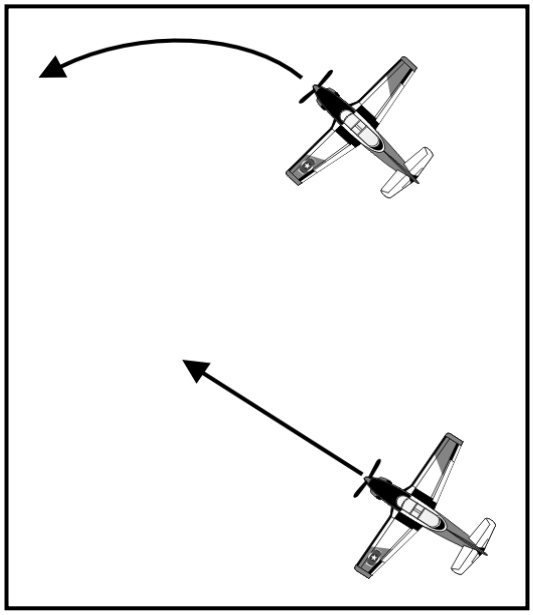

**Figure 3-25 Lead Pursuit**

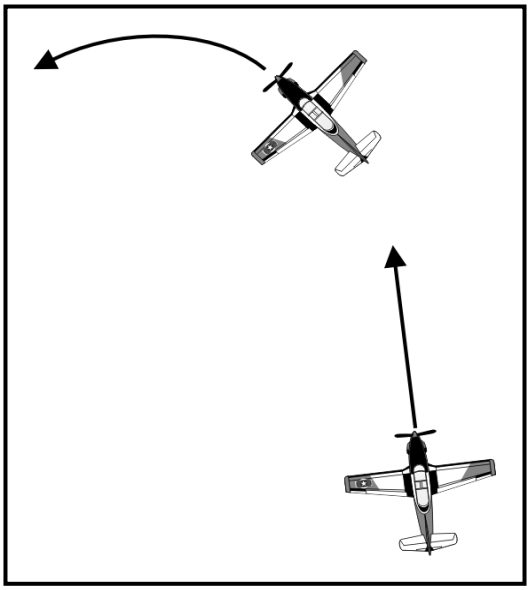

**Figure 3-26 Lag Pursuit**

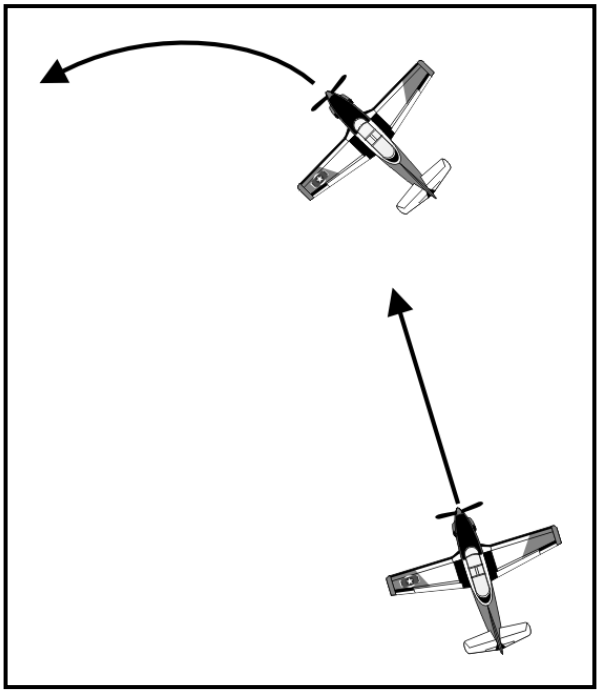

**Figure 3-27 Pure Pursuit**

**Breakup and Rendezvous:**

**Lead.** Prior to the first breakup and rendezvous, Lead establishes the formation in straight and level unaccelerated flight at the briefed altitude and 150 KIAS. Lead can initiate the breakup and rendezvous in either direction based on weather, area management, etc. Throughout the exercise, Lead can continue the break beyond 180º or vary the rendezvous turn as necessary to avoid clouds or keep the formation in the assigned area. Lead must ensure Wing is on the opposite side of his break (Lead breaks away from Wing).

1. Set 150 KIAS, check Wing in the proper position, on the appropriate side, and the area clear.

2. Give the break up and rendezvous signal (Figure 3-28) and look for Wing to acknowledge.

**Figure 3-28 Breakup and Rendezvous Signal**

3. Give the kiss-off signal (Figures 3-29 and 3-30).

**Figure 3-29 Kiss-Off Prep**

**Figure 3-30 Kiss-Off Execute**

4. After kissing off Wing, Lead breaks away at 45º AOB for a minimum of 180º of turn while maintaining airspeed and altitude. A slight power addition may be required to maintain 150 KIAS in the turn.

5. Five degrees prior to the desired heading, Lead will roll out sharply to indicate the new heading.

6. Once wings level, correct airspeed (150 KIAS) and altitude if required. After stabilizing, time for a minimum of 20 seconds (more time may be necessary for area management).

7. When timing is complete, Lead will "flash" by banking the wings up to at least 45º AOB in the direction of the rendezvous (either left or right) and then reset the bank angle to 20º. Maintaining 20º AOB and 150 KIAS while minimizing power changes is critical to Wing's successful completion of the rendezvous. Ideally, Lead will not manipulate power throughout Wing's breakup and rendezvous practice.

8. Monitor Wing during the rendezvous. On dual flights, Wing may practice multiple rendezvous as per the instructor's guidance.

**Breakup and Rendezvous:**

**Wing.** The Breakup and Rendezvous Exercise allows Wing to apply the concepts of radius of turn, bearing lines, and pursuit curves.

1. Respond to Lead's breakup and rendezvous signal with a head-nod.

2. As Lead passes abeam after the kiss-off and break, Wing will break using a maximum of 60º AOB while maintaining 150 KIAS and keeping Lead on or slightly below the horizon.

3. Wing's goal is to establish 800 – 1000 feet of separation and then use pursuit curves to stay there. The further Wing's nose is pointed behind Lead's, the more rapidly his nose-to-tail distance will increase and vice versa.

4. To maintain 800 - 1000 feet of separation once established, Wing shall place Lead at his 11 (left turn) or 1 (right turn) o'clock position until rollout.

5. When Lead rolls out of turn, Wing shall maneuver to place lead at his 12 o'clock, slightly below the horizon. At this point, wing must **aggressively** correct to 150 KIAS and ensure a stable power setting prior to Lead's initiation of the rendezvous.

6. When Lead flashes his wings and sets the turn direction, Wing will use 30º of bank to maneuver inside Lead's radius of turn (lead pursuit) **while holding Lead on the horizon**. Hold 30º of bank until you arrive on the 45º bearing line (when Lead's vertical stabilizer **BISECTS** the opposite wing, Figure 3-31).

7. After arriving on the 45º bearing line, Wing should anticipate intercepting the 60º bearing line by shallowing his AOB towards wings level. He must reduce his AOB prior to reaching the rendezvous bearing to avoid going acute. When Wing arrives on the 60º bearing line, he should being to align his fuselage with Lead's.

**Figure 3-31 45º Bearing Line**

**Figure 3-32 60º Bearing Line (Tip of Lead's Vertical Stabilizer on the Tip of Lead's Opposite Wing)**

8. Wing now must use the concepts of radius of turn, bearing lines, and pursuit curves to effect closure and complete the rendezvous. The goal for Wing is to hold Lead on the horizon, maneuver on the 60º bearing line until within one wingspan of Lead, and then execute the join-up phase.

In terms of power, Wing will ensure 150 KIAS is set prior to the wing flash and beginning of the rendezvous. After the wing flash, Wing will concentrate on maintaining the 60º bearing line and closure rate relative to Lead's aircraft. Wing will not change power until:

1. The join-up phase begins.

2. An underrun is required.

3. 'Hung" or "stuck" on the bearing line as a result of airspeed deviations.

In terms of **altitude**, Wing must hold Lead **on the horizon** throughout the rendezvous. If Lead's aircraft is **below** the horizon, Wing is high and should descend slightly to put Lead on the horizon. If Lead's aircraft is **above** the horizon (a large amount of sky between Lead's aircraft and the horizon), Wing is low and should climb slightly to put Lead on the horizon. If the horizon is not clear (i.e., haze during the summer), center Lead's opposite wingtip on the tip of the vertical stabilizer to set altitude. If Wing does not maintain altitude (i.e., climbs and descends during rendezvous), Wing's airspeed will change requiring an adjustment to torque, making it more difficult to maintain the bearing line.

In terms of **bearing line**, Wing must adjust his angle of bank to maintain the 60º bearing line and create closure towards Lead. The secret to the rendezvous portion is to hold Lead's vertical stabilizer on the opposite wingtip; this will manage both bearing line and closure. As Wing approaches Lead (within three wingspans), the closure should be at a "walking speed."

If Wing is ahead of the bearing line or "acute," there will be space between Lead's wingtip and vertical stabilizer (Figure 3-33). Being "acute" is caused by Wing having too much AOB and will result in excessive closure. In this case, Wing should correct back to the 60º bearing line by **decreasing** bank angle a small amount.

**Decrease AOB**

**Figure 3-33 "Acute" During Breakup and Rendezvous**

If Wing is behind the bearing line or "sucked," Lead's vertical stabilizer will be inboard of the wingtip (Figure 3-34). Being "sucked" is caused by Wing holding too shallow of an AOB and will result in insufficient closure. In this case, Wing should correct back to the 60º bearing line by **increasing** bank angle a small amount.

**Increase AOB**

**Figure 3-34 "Sucked" During Breakup and Rendezvous**

Overall, the Wing's goal should be to hold Lead on the horizon and manage the 60º bearing line and airspeed by recognizing deviations early and making small corrections to altitude, AOB, and torque as required. Wing shall not use more than 150 KIAS for the rendezvous unless hung on the bearing.

8. As Wing approaches Lead on the 60º bearing line, Wing will see more detail on Lead's opposite wing (rivets, aileron hinges, etc.). Wing should look to place the fuel cap on the opposite wing above the UHF antenna or dot the UHF antenna with the fuel cap. Wing needs to monitor closure because as Wing approaches Lead, any corrections to angle of bank will take effect quickly. If Wing becomes “hung” on the bearing line and airspeed is 150 KIAS, it is acceptable to add a small amount of power (25-50 ft-lbs).

9. The joinup phase of the rendezvous begins at the point where a T-34C wingspan will no longer fit between Wing and Lead. The joinup phase should be at a slow and controlled rate of motion (i.e., Wing should close at a walking pace and be able to stop and freeze the aircraft at any point). If closure is slightly fast (running pace), Wing may need to begin the joinup phase early (two wingspans out). Execute the joinup phase by **simultaneously:**

a. Lowering the nose to establish **20 feet of stepdown** (exhaust stack tangent to the leading edge of the near wing).

b. Adjusting power to maintain **20 feet of nose-to-tail distance**. For a rendezvous to the left, the “VY” in NAVY or the “NES” in MARINES should be underlined with the ventral fin. For a rendezvous to the right, the “NA” in NAVY or the “MAR” in MARINES should be underlined with the ventral fin.

c. Adjust angle of bank to **establish the aircraft directly under** the pitot tube for a rendezvous to the left or the moisture scupper drain for a rendezvous to the right. As you approach the joinup position, anticipate matching Lead's angle of bank in order to **stabilize momentarily** in the joinup position with 20 feet of stepdown, 20 feet of nose-to-tail separation, and directly under either the pitot tube (left turning) or the moisture scupper drain (right turning).

d. Once stabilized in the joinup position, move out and up to the turn away position by adjusting angle of bank to cross laterally beneath and behind Lead to the outside of the turn at a slow and controlled pace.

e. Once on the outside of the turn, add power and back stick to move up into the normal turn away references (fuselage on the horizon, ventral point over the cutout).

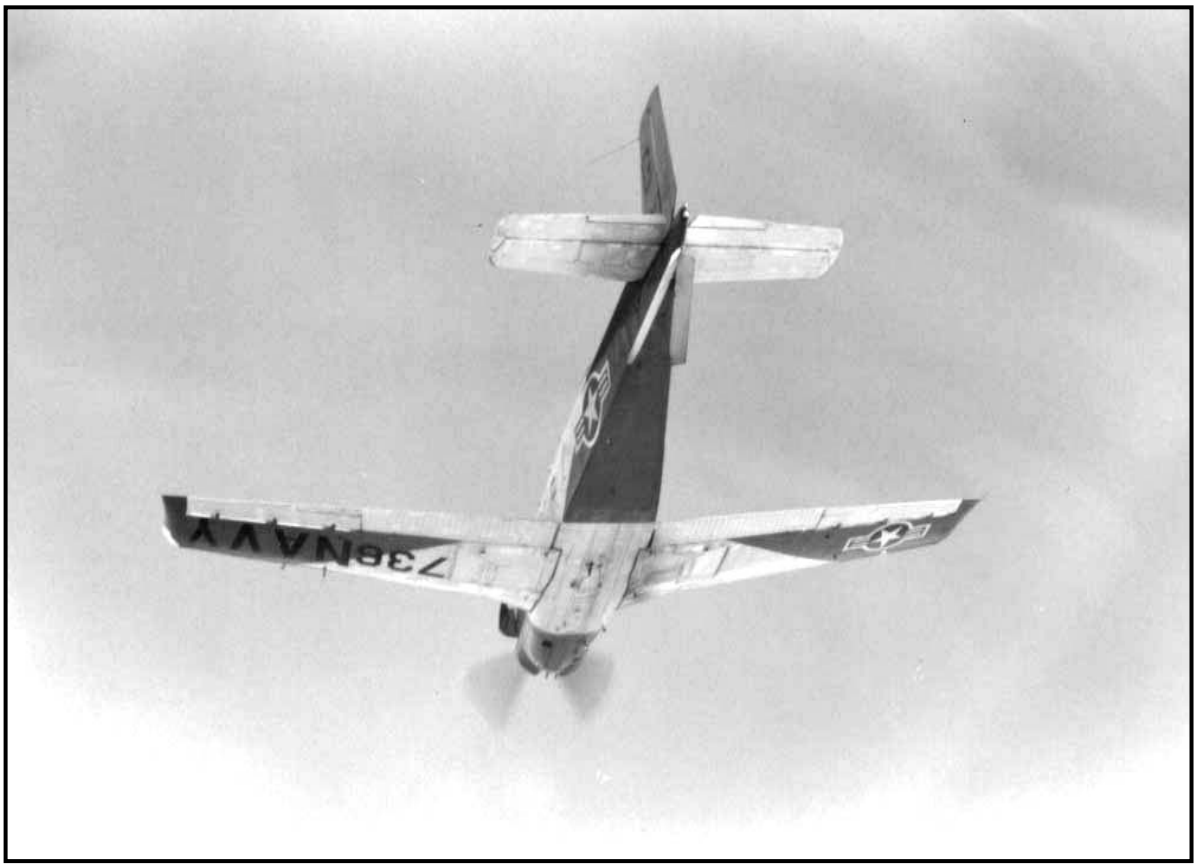


**Figure 3-35 Joinup Picture, 20 Feet of Stepdown**

**Breakup and Rendezvous Common Errors**

**Lead**

1. Fails to monitor Wing during the rendezvous.

2. Fails to clear for the formation during the breakup and rendezvous.

3. Fails to maintain airspeed, bank angle, and altitude during the rendezvous.

**Wing**

1. Fails to maintain airspeed.

2. Fails to hold Lead on the horizon on the rendezvous.

3. Flies through the 45º and 60º bearing lines and becomes acute.

4. Confuses the proper bank angle corrections. For example, when acute with excessive closure, Wing incorrectly increases bank angle instead of decreasing bank angle.

5. Uses large corrections to the bearing line and never stabilizes. Fails to recognize relative motion and overshoots the 60º bearing line without stabilizing.

6. ACCEPTS AN UNSAFE SITUATION AND DOES NOT INITIATE AN UNDERRUN!

**Breakup and Rendezvous Keys to Success**

**Lead**

1. Pick a clear area where you can initiate the breakup and rendezvous and still remain in the area.

2. Focus on being a smooth platform for Wing, maintain 150 KIAS, 20º of bank, and altitude.

**Wing**

1. Focus on holding Lead on the horizon.

2. Detect relative motion and deviations from the bearing line early so only small bank angle corrections are required.

3. **If uncomfortable with the closure rate, make the decision to underrun early**.

## 313. RENDEZVOUS UNDERRUN

The underrun procedure is a safety procedure that allows Wing to get out of an unsafe situation during the rendezvous phase, stabilize clear of Lead, and then safely rejoin. Wing should always approach the rendezvous with a conservative mindset. Wing will initiate an underrun when any of the following situations occur:

1. If Wing becomes **excessively acute** (ahead of the 60º bearing approaching the abeam position of Lead).

2. If Wing gets **acute in close** to Lead and is too close to make angle of bank corrections.

3. If Wing experiences an **excessive closure rate**.

4. Whenever **Wing is uncomfortable** and in his judgment an unsafe situation has developed.

### Underrun Procedure

If Lead is wings level, underrun by simultaneously executing the following steps (Figure 3-36):

1. **LOWER** the nose to maintain stepdown.

2. Reduce power to **IDLE** to avoid passing ahead of Lead.

3. Move further to starboard to obtain additional **LATERAL SEPARATION**.

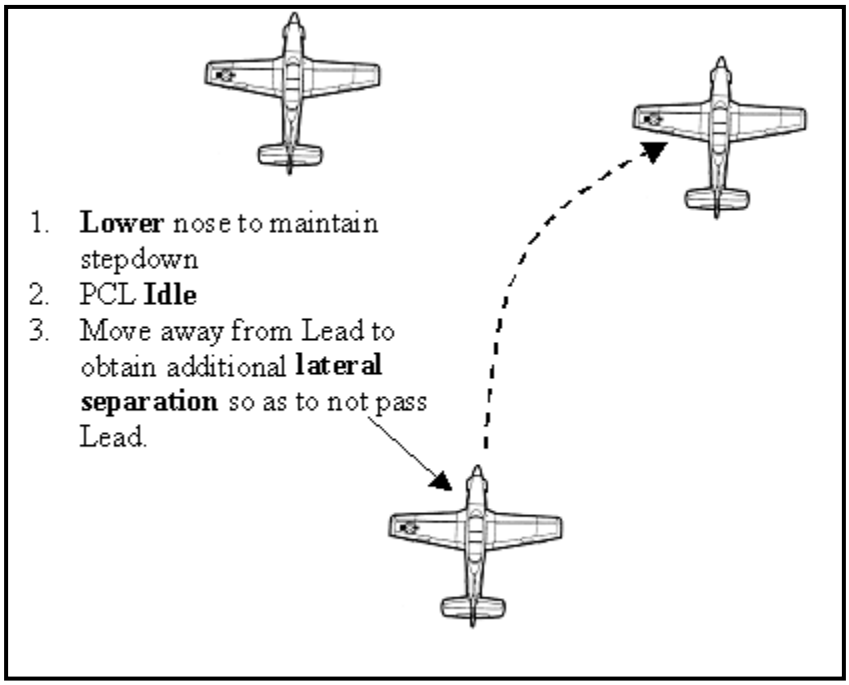


**Figure 3-36 Underrun if Lead is Straight and Level**

If Lead is in a turn, underrun by simultaneously executing the following steps (Figure 3-37):

1. **LOWER** the nose to obtain at least 20 feet of stepdown.

2. **LEVEL** your wings and move to a position outside the Lead's radius of turn.

3. Reduce power to **IDLE** to avoid passing ahead of Lead.

4. As you pass Lead's tail, begin to match Lead's angle of bank. When relative motion is controlled, as noted by an absence of closure with Lead, join to the turn away reference.

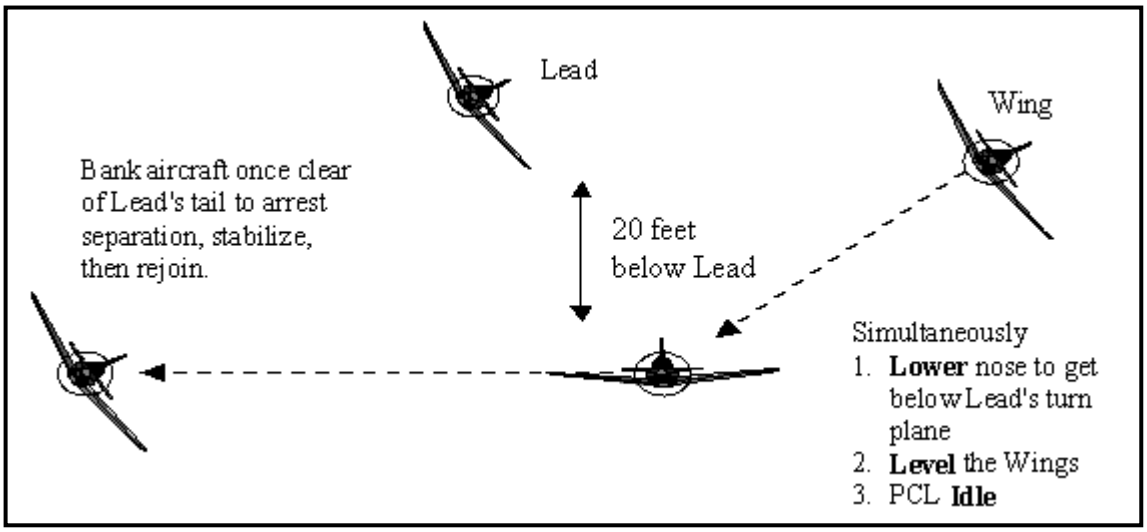


**Figure 3-37 Underrun When Lead is in a Turn**

**Underrun Common Errors**

**Wing**

1. Fails to initiate underrun soon enough, forcing excessive negative “Gs” or IP intervention.

2. Fails to maintain at least 20 feet of stepdown during the underrun maneuver.

3. Misjudges relative motion during the underrun resulting in excessive separation.

**Underrun Keys to Success**

1. Recognize an unsafe/unsalvageable situation early.

2. Take a conservative approach and don't press a bad situation.

## 314. LEAD CHANGE PROCEDURE

The Lead Change is a maneuver designed to effect a safe and efficient change of the formation lead with the least possible degradation to flight integrity. The Lead change has to occur with relative ease so there is a crisp, instantaneous exchange of Lead and Wing roles and responsibilities. If at any time there is confusion by either aircrew about who is in the lead, utilize the radios to identify the leader (use aircraft side numbers to identify the Lead aircraft).

### Lead Change Signal

1. Lead will establish the section in a location where the lead change has enough room to occur and Wing will have enough time to orient himself in the area.

2. Lead will check Wing in position on the **right side** (conduct a crossunder if necessary) and check the area clear.

3. Lead will initiate the lead change signal by patting the **right side** of his helmet three times with his **left hand** while looking forward (Figure 3-38).

4. Lead will pass the lead by pointing his **left hand** to Wing once (Figure 3-39).

**Figure 3-38 Initiate Lead Change**

**Figure 3-39 Pass the Lead**

**Figure 3-40 Wing Accepts the Lead**

5. Wing will accept the lead by patting his helmet once on the **left side** with his **left hand** and giving a single chopping forward motion (Figure 3-40). If Wing shakes off the signal or does not acknowledge the signal, Lead will maintain the lead position and repeat the lead change signal.

**Lead Change Procedure**

1. Establish 20 feet wingtip clearance by using a **slight** wing dip away from the new leader.

2. Arrest lateral motion with a **slight** wing dip toward the new leader.

3. Establish 20 feet of step-down and slide aft of the new leader in one fluid motion by lowering the nose while simultaneously reducing power.

4. Arrest descent by raising the nose slightly and continue to slide aft, allowing the pitot tube to slide forward along the bottom edge of the black portion of the engine cowling.

5. Add power to stop with 20 feet of nose-to-tail separation as the angle of attack (AOA) probe intercepts the "prop arc" and the "V" in NAVY appears above the "cutout". For the word MARINES, use the letter "N" above the "cutout". Place the trailing edge of the port exhaust stack tangent to the leading edge of the wing to ensure 20 feet of stepdown.

6. Make a normal crossunder to the starboard parade position with 20 feet of stepdown.

7. When stable, move up into the starboard parade position.

**Common Errors**

1. Lead does not initiate the Lead change in a good position in the area (i.e., with sufficient space in the area, pointed at a good landmark).

2. Wing fails to get correct lateral separation from Lead (i.e., flies in front of Lead or gets excessively wide).

3. Wing misses lead change signal.

4. Wing slides aft prior to establishing 20 feet of stepdown.

5. Wing slides aft too quickly (i.e., Wing reduces power too much).

## 315. RECOVERY PHASE

The recovery phase begins when back in Parade position with another fuel check followed by the descent to the course rules recovery. Lead should navigate the flight to allow a comfortable descent to the appropriate entry point while maintaining VMC.

**The Descent**

**Lead**

1. Clear the area and give Wing a "fuel check." Develop a game plan to descend and intercept course rules, wings level with a good visual flight rules (VFR) clearing capability.

2. Ensure the formation has the current ATIS information.

3. Lower the nose smoothly and allow the aircraft to accelerate to 170 to 200 knots. Approximately 5 knots before the desired airspeed, slowly retard the power to 400 ft-lbs of torque. Retrim to maintain desired airspeed and balanced flight.

4. Begin the level off approximately 200 feet prior to the desired altitude and advance the power as required, establishing the formation at 170 KIAS.

**Wing**

1. Execute the "fuel check" when commanded by Lead.

2. Maintain the position commanded by Lead throughout the recovery.

**Homefield Entry**

1. The homefield entry will be conducted in accordance with local course rules.

2. Be conscious of the traffic pattern direction to ensure Wing is properly positioned for the break (i.e., on the side opposite the direction of the break).

3. Be aware of the reduced maneuverability inherent in a formation flight. This requires increased vigilance when operating in and around the airport traffic area.

**The Break and Landing**

1. The break will be conducted in accordance with local standard operating procedures. Lead will pass Wing the “kiss-off” signal just prior to commencing his break.

2. Once Lead breaks, Wing must quickly resume a VFR scan and will break when abeam Lead.

3. **Lead will fly a no-flap pattern and landing and Wing will fly a full-flap pattern and landing to help build spacing between the aircraft.** Wing is responsible for ensuring at least 1500 feet of separation is maintained between the two aircraft until touchdown.

**Common Errors During the Recovery**

1. Lead conducts improper check-ins after frequency changes. Lead forgets to check Wing in or does not allow Wing enough time to switch frequencies.

2. Lead fails to consider descent rates and VFR clearing while entering course rules.

3. Wing fails to maintain proper stepdown during the descent.

4. Wing fails to stabilize relative motion prior to attempting to change radio frequencies.

5. Wing and Lead fail to trim for transitions during the recovery.

6. Wing and Lead fly a poor individual landing pattern after the break.

7. Wing does not keep Lead in sight in the landing pattern.

8. Wing attempts to follow Lead in the landing pattern instead of flying his own pattern.

9. Lead forgets to fly a no-flap pattern and landing.

# CHAPTER FOUR
# FORMATION SOLO FLIGHT

## 400. INTRODUCTION

The solo flight is designed to build confidence in the student's ability to combine solo flight with the knowledge and techniques acquired during the formation stage. The formation solo flight should be one of the most rewarding flights performed during Primary training if conducted with strict adherence to safety, procedures, and course rules.

## 401. FORMATION CHECK (F4005)

The safe-for-solo formation check will be conducted in the same manner as a normal syllabus flight, completing the departure, area work, and recovery phases. If not already completed on a previous sortie, the flight will be broken up into separate aircraft to conduct the individual safe-for-solo requirements. As in any safe-for-solo check, the student is responsible for knowledge of aircraft limitations, formation procedures, emergency procedures, and course rules. The student will be expected to demonstrate consistency and safety in landings and emergency procedures prior to being signed off safe-for-solo. Once the individual aircraft items are complete, the IPs will rejoin the formation. The flight will resume at the point at which the normal sequence was interrupted.

## 402. SOLO FLIGHT (F4401)

The solo flight will consist of either two solos flying as the section with a third aircraft as the IP chase/safety observer, or one student flying on the wing of an IP platform. Emphasis will be placed on safety! Apply the safety rules learned during your training (underrun, stepdown).

**Division Solo.** This format will consist of two student solos and an instructor chase aircraft. The solo chase is along to ensure adherence to safety procedures, course rules, and the proper conduct of the mission. The chase pilot will be maneuvering to various vantage points to observe the section, so solo students should conduct the sortie as if there were only two aircraft in the formation. Cruise formation and 45º AOB parade turns will **not** be flown in the division solo flight. If you have any safety concerns during this sortie, use your training up to this point to make the right decision (i.e., underrun if necessary during breakup and rendezvous). Students should continue to use hand signals to communicate. Stay off the radios unless it is necessary to clarify something or for safety of flight (i.e., traffic, confusion, or an emergency situation arises). Remember to monitor your engine instruments, fuel state, and trim the aircraft. Follow instructions from the Chase pilot when directed, remain alert, and above all, BE SAFE!

**Section Solo Format.** The other option for the formation solo is to have a solo student fly on the wing of an IP platform. The profile for the solo flight will include the departure to the working area, parade profile, and then return to base. As with the division flight, the key is to be safe and conservative during this mission.

**Solo Emergencies.** Solos should notify the IP immediately if they are experiencing any type of malfunction. The IP will immediately focus attention on the emergency aircraft and provide support and direction. The instructor may also have the other solo student ease out of formation and return to base (if required). Reference Chapter 5 for more specifics.

# CHAPTER FIVE
# FORMATION EMERGENCIES

## 500. INTRODUCTION

Just like anything in formation, emergencies are dealt with differently than in a single-plane sortie. Always remember, no matter what is going on in the formation, the greatest immediate threat is going to be a midair collision with your formation partner. The threat of a mid-air collision can be alleviated in seconds by using the radios to ensure the aircraft with the problem has the lead (if he is not already in the lead position). Once a crisp, expeditious lead change occurs, the formation can deal with the emergency. The “rule of thumb” for a formation emergency is the emergency aircraft will always **initially** have the lead, and the non-emergency aircraft will assume the chase position and provide mutual support ("the bleeder is the leader"). In some extreme cases, such as an engine failure, a lead change may not be practical and the bad aircraft may simply have to break out of the formation.

**Formation Lead Change in an Emergency.** As mentioned above, the emergency aircraft should be placed in the lead position initially (radio failure procedures, with no other complications, are exceptions and will be addressed separately in this section). In-flight emergencies are almost always time-critical and require the undivided attention of the aircrew in the emergency aircraft. Since midair collision is so serious, the lead change in a formation emergency must be expeditious and safe. The preferred method to swap lead in an emergency is to use the radios.

1. **Knight 2:** “Knight 1, Knight 2 has (state problem, e.g., chip light), request lead on the right.”

2. **Knight 1:** “Knight 2 you have the lead on the right.”

3. **Knight 2:** “Knight 2 has the lead on the right.”

The other option is a visual lead change (which implies the radios are too busy or are not available due to a radio failure or electric fire). Lead should monitor Wing periodically during the flight and if he observes Wing giving one of the hydraulic, electrical, fuel, oxygen, engine (HEFOE) signals, the lead change should be done visually.

Once the lead change occurs the non-emergency aircraft needs to reduce power and assume the Chase position. The Chase position is the same as the Cruise position (Figure 5-1), but level to stepped up on Lead. Wing wants to fly a position where he can keep an eye on Lead, provide mutual support (e.g., VFR scan, ground-track to emergency airfield, etc.), and not distract Lead. Wing can fly anywhere in the Chase position, but not where Lead is going to be concerned about Wing during his own maneuvering (e.g., for a precautionary emergency landing/high altitude power loss (PEL/HAPL)). Keep a safe distance from Lead until he tells you otherwise (requests a gear-inspection for example). Also, consider matching the configuration (gear/flaps) of Lead to allow you to easily maintain the Chase position.

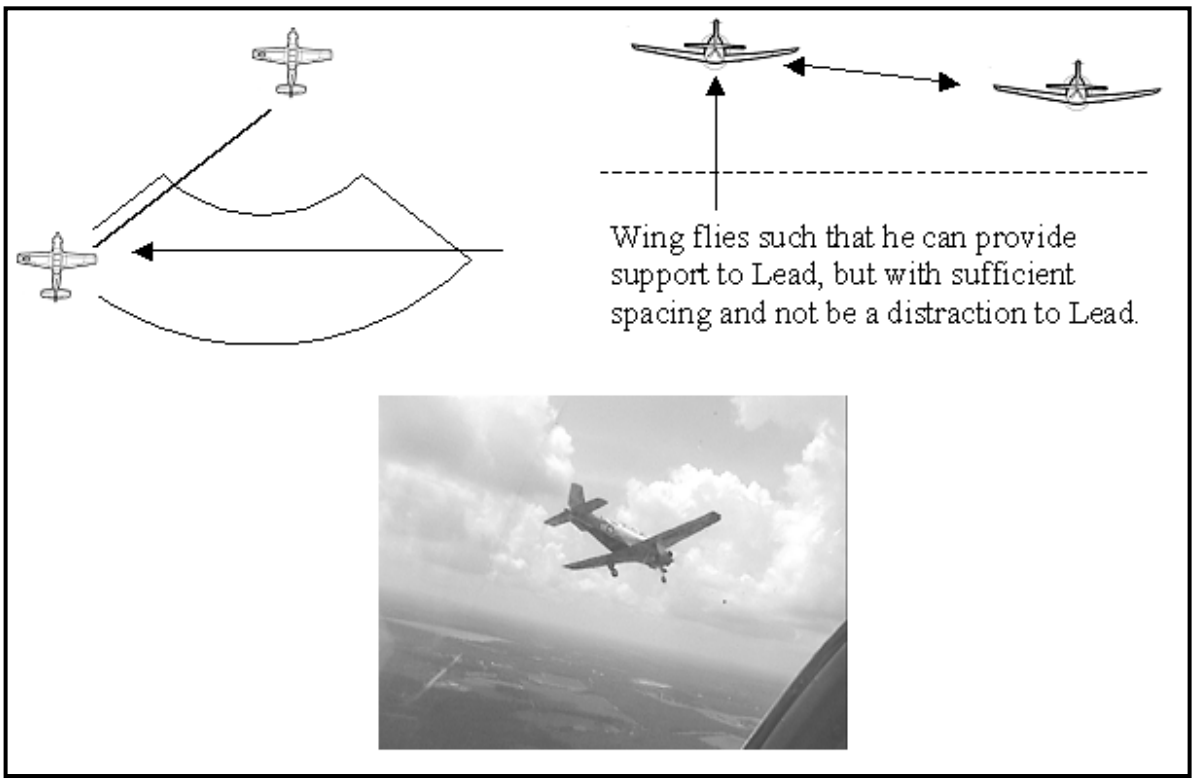


**Figure 5-1 The Emergency Chase Position**

**Formation Emergencies – Lead**. Once the lead change occurs the emergency aircraft needs to execute the NATOPS procedures appropriate for the situation. Do not forget you have a Wingman, not for Wingman consideration, but as an asset you can use to help you deal with the emergency. When the emergency is under control, delegate tasks to the Wingman as appropriate. For example, Wing can read the checklist over the radio, confirm the position of an outlying field (OLF), conduct airborne damage or landing gear inspection, etc. Remember, as the emergency aircraft, you need to execute your best single plane emergency procedures and be directive to delegate tasks to your Wingman.

**Formation Emergencies – Wing.** The one thing to remember as Wing when the aircraft in the lead has an emergency is **to keep your mouth shut unless absolutely necessary** for safety of flight. It is completely possible for the "over-helping" Wingman to distract Lead during this critical situation. The best Wingman during an emergency is one that flies a solid Chase position, observes for safety of flight issues (e.g., traffic, clouds, bailout altitudes, etc.), and ensures Lead is executing a smart game plan. For instance, if Lead is not performing a PEL to the nearest suitable runway, by all means notify him right away. Otherwise, as Wing you need to "hang back," keep quiet, and give Lead a chance to use his training to deal with the situation.

## 501. AIRCRAFT MAINTENANCE PROBLEMS ON DECK

If either aircraft in the section needs to ground abort or is delayed by a maintenance problem, try to call the other aircraft to notify them of your status and when you expect to be ready to taxi. Anytime you step to a spare aircraft or have a maintenance problem, do not rush your checklist. BE CAREFUL and THOROUGH on your preflight and checklist. If a solo aircraft ground aborts in a division solo mission, then the whole mission is cancelled unless a section option was briefed. If a section option was briefed, the Instructor will take out the single solo student. If the chase aircraft is down, then the mission is always cancelled. If the mission cancels for any reason, ensure your flight plan (if filed) is closed out with Base Operations.

## 502. INTERVAL TAKEOFF ABORTS

Aborted takeoffs will be handled in accordance with Section V of the T-34C NATOPS Flight manual with the addition of a short radio transmission when appropriate.

**Lead.** If Lead aborts the takeoff, he will remain on his respective side of the runway and immediately transmit "**[tactical call sign], abort, abort, abort**" - so both aircraft know to abort the takeoff. The Wingman will abort behind Lead, also maintaining his side of the runway. The key to success in this scenario is to do whatever is necessary to avoid hitting the other aircraft, to include going off the runway and into the grass. If any aircraft departs the prepared surface, then execute the appropriate NATOPS procedure.

**Wingman.** If Wing aborts the takeoff, he will remain on his side of the runway and execute the aborting takeoff procedures. Once the Wing has his aircraft under control and Lead is safely airborne, make a radio call to notify Lead (e.g., "Knight 1, 2 aborted for a chip light"). Lead will enter the downwind or depart the airfield and reenter as a single aircraft in accordance with course rules.

**Chase.** If the Chase aborts his takeoff, the student solos will either enter downwind or depart the airfield and reenter as a single aircraft in accordance with local course rules. SOLOS WILL NOT JOIN UP at any time during the downwind, departure, or reentry into the pattern.

## 503. SECTION PEL

After the lead changes to put the PEL aircraft in the lead (if necessary), the PEL aircraft needs to intercept the Emergency Landing Pattern (ELP) as soon as possible. Lead should fly his best possible individual PEL. Wing should maintain position, clear for the formation, back Lead up with in-flight tasks, and monitor Lead's performance (e.g., altitude, airspeed, vsi, etc.). Lead will maneuver and configure as appropriate prior to High Key (see Figure 5-2) while Wing flies the Chase position and matches Lead's configuration. Lead may elect to kiss-off Wing at High Key, however it is recommended to have Wing continue to chase the emergency aircraft through the ELP in order to provide mutual support. During the ELP, Wing should wave off when directed by Lead, or when reaching 300 feet AGL on final. During the waveoff, Wing should keep his eyes out for other aircraft and be careful not to overspeed the gear or flaps.

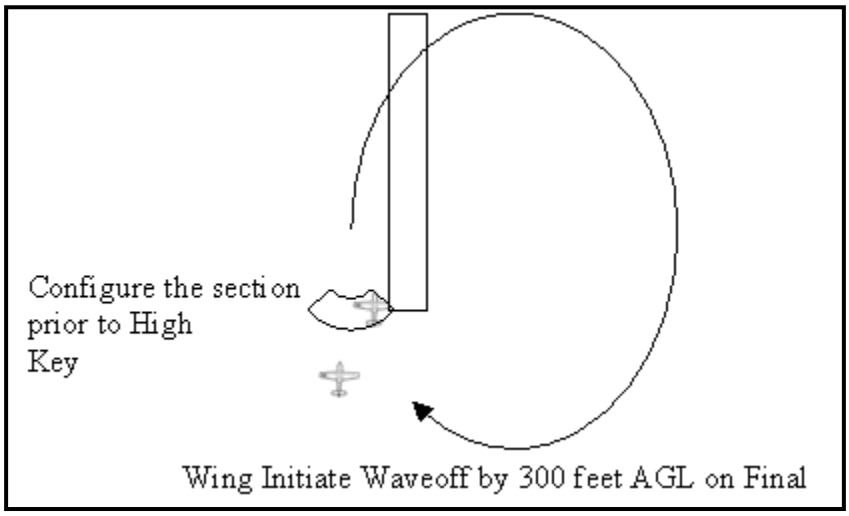


**Figure 5-2 Section PEL**

**NOTE**

The student **SHALL NOT** be in control of the aircraft during a section PEL.

## 504. UNSAFE LANDING GEAR INDICATIONS

The following procedures are provided in addition to those outlined in the T-34C NATOPS.

### Unsafe Gear on Takeoff

1. **Lead or Wing.** The aircraft with the unsafe indication should take the lead and climb to an emergency orbit or delta pattern (in accordance with (IAW) local course rules), making the appropriate radio calls to the tower. Coordinate with your Wingman or a chase aircraft to get an airborne landing gear inspection. The chase aircraft will follow the distressed aircraft to the emergency orbit or delta pattern and assist as necessary. If on a solo flight, the solo without the gear problem will depart the field and reenter as a single aircraft in accordance with course rules.

2. **Solo Chase.** If the solo chase aircraft has an unsafe indication, the student solos will enter downwind or depart independently and reenter as individual solos in accordance with local course rules. **SOLOS WILL NOT JOIN UP** at any time during the downwind, departure, or reentry.

### Unsafe Gear on Landing

1. **Lead or Wing.** The aircraft with the unsafe indications should take the lead and climb to the emergency orbit or delta pattern making the appropriate radio calls to tower and the chase aircraft. The chase aircraft will follow the distressed aircraft to the emergency orbit or delta pattern and assist as necessary. If on a solo flight, the solo without the malfunction will make a normal landing.

2. **Solo Chase.** If the solo chase aircraft has an unsafe indication, both solo aircraft will continue in the pattern and make a normal landing.

## 505. AIRBORNE LANDING GEAR INSPECTION

This discussion is not meant to replace the NATOPS procedures, refer to Chapter 15 for these procedures. Consider using the VHF radio to establish discreet contact between aircraft if the UHF frequency is busy. The inspection should be conducted at a minimum of 2000 feet AGL.

**Figure 5-3 Airborne Landing Gear Inspection Checking the Mains**

**Figure 5-4 Airborne Landing Gear Inspection Checking the Nose**

Cockpit-to-cockpit communication should include, as a minimum, any changes in configuration, airspeed, or altitude of the aircraft being inspected. The inspecting aircraft should keep the other aircraft informed of his current position, intended movements, and should not take undue risks while inspecting the landing gear.

**NOTE**

The student **SHALL NOT** be in control of the aircraft during the landing gear inspection.

## 506. AIRBORNE DAMAGED AIRCRAFT

Aircraft will follow procedures established in Chapter 15 of the current T-34C NATOPS. If damage occurs between Lead and Wing, both aircraft should turn away from each other until adequate separation is achieved. Lead will immediately be directive and start working a deconfliction plan between the two aircraft to ensure lateral separation using ground references or distance measuring equipment (DME) and/or altitude separation. Lead should consider coordinating for individual chase aircraft from other aircraft to help out. After the checklist is completed, a game plan should be developed to get both aircraft on the deck safely.

If a single aircraft in the formation is damaged (e.g., bird strike), the damaged aircraft will immediately be given the lead and the good aircraft will assume the chase position and assist as necessary.

If a solo aircraft is damaged, the other solo will return to base as a single aircraft and the Solo Chase will assist the damaged aircraft. If the Solo Chase is damaged, the formation will be split up and the solo students will return to home field as single aircraft. The Solo Chase will coordinate for a separate emergency chase aircraft.

## 507. UNINTENTIONAL INSTRUMENT FLIGHT / LOST SIGHT PROCEDURES

If Lead unintentionally enters instrument meteorological conditions (IMC), Lead will immediately shift his scan to the instruments and fly straight and level for one minute. If a turn is necessary, Lead will make a shallow angle of bank turn (15º) for 180º away from Wing to attempt to return to VMC. **Wing will maintain the parade position references during all turns in IMC (i.e., welded wing).**

If Wing loses sight of Lead in IMC, then Wing will **simultaneously**:

1. **TRANSITION TO AN INSTRUMENT SCAN**

2. Call "**[tac call sign] two is lost sight**", while executing the following procedures:

   a. **Straight and Level** (Figure 5-5). Wing will turn away from Lead using 15º of bank for a 30º heading change. Lead will transmit his exact heading and altitude (e.g., "Knight 1" is heading 270 at 5500 feet). Lead will direct a rejoin or coordinate for a separate squawk for the Wingman as appropriate.

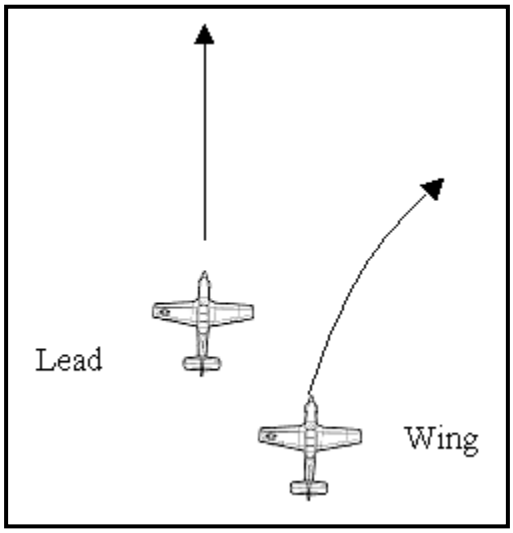


**Figure 5-5 Lost Sight - Straight and Level**

b. **Turns** (Figure 5-6). If in a turn, the aircraft on the outside of the turn will roll wings level and transmit his exact heading and altitude. The aircraft on the inside of the turn will maintain bank angle and continue the turn for a minimum of 30º of heading change. Lead will direct a rejoin or coordinate for a separate squawk for the Wingman as appropriate.

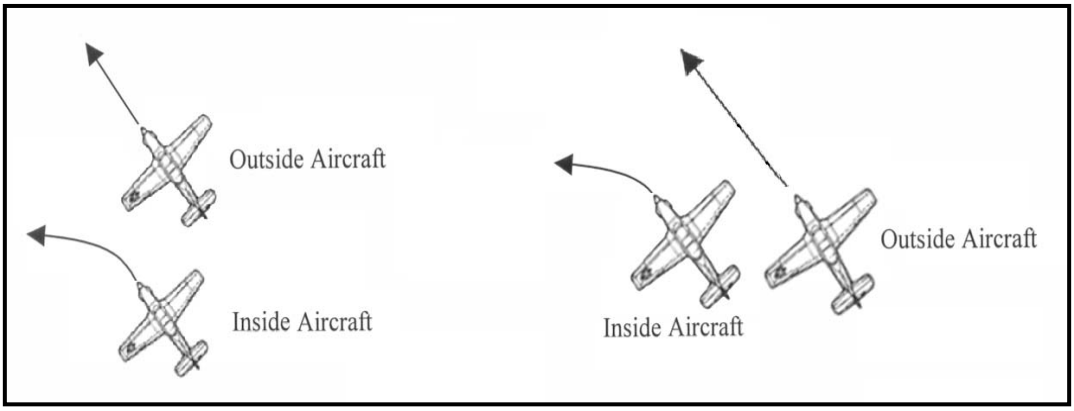


**Figure 5-6 Lost Sight - Turns**

c. **Solo Chase.** In all cases, the Solo Chase instructor will maneuver as required for safety. Chase will assist in rejoining the flight or coordinate to separate the flight as appropriate.

d. **Climbs or Descents.** If lost sight is encountered while in a climb or descent, the wingman will level off, while executing the appropriate procedure outlined above. The Lead or Solo Chase will be directive, using the radios, to ensure deconfliction by assigning different altitudes to formation members. If after one minute, positive communication with ATC has not been established, the wingman will resume the last assigned heading and altitude, squawk 7600, and comply with normal IMC lost communication procedures.

**NOTE**

Solo flights will maneuver as necessary to maintain VMC. However, if IMC is encountered, proceed with the above procedures. If VMC conditions are regained at any point, maintain VMC and communicate your condition to the others in the flight.

## 508. BLIND PROCEDURES

In the event Wing loses sight of the leader in VMC, Wing will immediately call "[tac call sign] two is Blind." The leader will immediately attempt to establish visual contact. If successful, Lead will call the visual to Wing using the Wing's clock position, direct a rejoin when Wing is visual, and continue the flight. If unsuccessful, proceed as indicated below.

**Lead.** Check the area clear and climb 200 feet **above** the working altitude. Proceed direct to the prebriefed rendezvous point (visual landmark or a radial/DME fix). Establish a 20º angle of bank, left orbit at 150 knots until the flight is rejoined. Lead will descend to the working altitude once Wing completes the rendezvous.

**Wing.** Immediately call "[tac call sign] two is Blind", check the area clear, and **descend** 200 feet **below** the working altitude. Proceed direct to the pre-briefed point (or the point Lead tells you to go to). When you call Lead in sight (i.e., "[tac call sign] two is Visual"), Lead will direct a rendezvous.

**NOTE**

Naval aircraft collision warning system (NACWS) will not be used as a primary means to rejoin the flight. NACWS may enhance situational awareness but will not be able to tell you specifically who you are looking at on the display. In order for NACWS to be of any use however, Wing should squawk 1200 and "Alt" so the Lead will get a NACWS display "hit" on Wing.

**Solo Chase.** The Solo Chase instructor will be directive to the solos using the radio. If a rejoin is not feasible, the chase will direct the solos to return to home field as individual aircraft.

## 509. RADIO FAILURE (NORDO)

Radio failure in a formation can produce a potentially confusing and hazardous situation. Before executing NORDO procedures, attempt radio communications on both the UHF and VHF radio. If NORDO, the formation should maintain VMC and conduct the following procedures.

**Section Flights.** The NORDO aircraft will pass the appropriate visual signal and should initially be placed in the lead position to troubleshoot and attempt to reestablish radio communications. If radio contact cannot be reestablished, the aircraft with the good radios shall be placed in the lead position to lead the flight home. The good aircraft will inform approach and tower Wing is NORDO and coordinate for ALDIS lamp signals.

If Lead experiences a radio failure after the VFR entry point for the runway in use, a lead change will not be conducted. Lead should pass the appropriate visual signal and Wing will handle communications, inform tower Lead is NORDO, and coordinate for ALDIS lamp signals. Lead should watch Wing for the break clearance. Wing will point at Lead and give the kiss-off signal when break clearance is received.

**Division Solo Flight.** During a division solo flight, indicate to the other solo in the flight of your radio failure by passing the appropriate visual signal. The solo with the good radios will inform the chase instructor immediately. The solo with the good radios should be placed in the lead position to lead the flight home.

If Lead experiences a radio failure after the VFR entry point for the runway in use, a lead change will not be conducted. Lead should pass the appropriate visual signal to Wing who will inform the Chase. The Chase will handle communications and coordinate for ALDIS lamp signals. Lead should watch Wing for the break clearance. Wing will point at Lead and give the kiss-off signal when break clearance is received.

If the Solo Chase loses his radios, he will advise Lead through hand signals and give the landing signal. Lead will break up the flight and each aircraft will return as individual solos. The designated Lead solo will inform approach and tower the chase aircraft is inbound NORDO.

THIS PAGE INTENTIONALLY LEFT BLANK

# CHAPTER SIX
# SECTION TAKEOFFS AND APPROACHES/IFR OPERATIONS

## 600. INTRODUCTION

Section takeoffs are used to launch multiple aircraft quickly without the necessity for a rejoin after takeoff. Section approaches provide for the rapid recovery of multiple flights of aircraft. In addition, section takeoffs and approaches provide instructors more options during IFR departures or recoveries.

## 601. SECTION TAKEOFF

A section takeoff is described as two aircraft taking off simultaneously with a minimum of 10 feet of wingtip spacing. Wing maintains the Parade bearing line throughout takeoff roll and liftoff. Flight members fly formation from brake release to rotation and into the airborne phase. Lead must use a reduced power setting to give the Wingman some power advantage to maintain position during the takeoff roll. The Wingman will be required to make small power corrections to avoid overrunning lead or falling behind.

### Section Takeoff Restrictions

1. Total crosswind component must be 10 knots or less.

2. Runway must be dry.

3. Ceilings above circling minimums (or 1000 feet/3 where circling minimums do not apply).

4. Minimum 5000 feet runway length available.

**Section Takeoff.** Once cleared onto the runway, the formation will complete their Takeoff Checklists and maneuver to the center of their respective sides of the runway, while maintaining a minimum of 10 feet of wingtip separation. Lead will position the Wingman upwind. If winds are calm or straight down the runway, position the Wingman on either side. If IMC conditions are expected and winds are not a factor, it may be desirable to place your Wingman on the outside of the turn. Wing will line up the leading edge of his wing with the trailing edge of Lead's horizontal stabilizer. When cleared for takeoff, proceed as follows:

### Lead

1. Hold brakes firmly. Pass the runup signal, set 500 ft-lbs., check engine instruments, and reset to 950 ft-lbs.

2. Check Wing's aircraft.

3. Return a thumbs-up to Wing.

4. Raise forearm to vertical and smoothly give the brake release signal (arm forward and down in a chopping motion, Figure 6-1). As Lead's arm drops below the canopy rail, the flight simultaneously releases the brakes.

**Wing**

1. Hold brakes firmly. Acknowledge the runup signal with a head nod, set 500 ft-lbs., check engine instruments, and reset to 1015 ft-lbs.

2. Check Lead's Aircraft

3. Pass Lead a thumbs-up when ready.

4. Release brakes upon Lead's signal and maintain position during takeoff roll.

The brake release signal by Lead is crucial to the section takeoff roll. As Lead, when Wing is ready, start the brake release signal by bending arm perpendicular to the canopy rail with the hand flat against the canopy. To signal brake release, smoothly “chop” arm down (Figure 6-1). When your arm is horizontal to the canopy rail, release the brakes and commence takeoff roll.

**Figure 6-1 Section Takeoff Brake Release**

**Lead.** As Lead, maintain a straight track down the center of your side of the runway. At 60 KIAS begin to apply smooth back stick pressure to effect rotation to the takeoff attitude (cowl seam on the horizon) no earlier than 80 knots. As Lead, your goal is to allow 4 to 5 seconds for complete nose strut extension. This slow rotation rate will provide time for wing to observe nose strut extension and match Lead's rate of rotation. Once both aircraft are safely airborne, check the fuel caps, give the gear up signal, and retract the gear. The preparatory signal for gear retraction is to lower your head (chin toward chest) and place your hand on the gear handle. Verify airspeed below 120 KIAS (ideally less than 110 KIAS to allow Wing a few extra knots). Execute gear retraction by simultaneously raising your head up and back (exaggerated motion) and raise the gear handle. After takeoff and gear retraction, look over to Wing and verify his gear appears up and locked. Once the Wingman is in position, Lead will reset power as appropriate for the departure (850 ft-lbs maximum).

**NOTES**

1. Depending on the wind conditions at takeoff, your Wingman may be in either a left or right Parade position. If you want your Wingman on a specific side, you may reposition him with a crossunder once established on the departure and above 300 feet AGL.

2. If the crosswind component exceeds 10 knots, a five-second interval takeoff will be made. Use caution during takeoff in gusty conditions for rapidly changing wind direction and velocity. Use timely corrections to maintain directional control and ensure aircraft separation.

**Wing.** Early detection and correction for changes in relative motion are the keys to performing a section takeoff. Wing maintains position down the runway by adjusting power to control bearing and rudder to maintain wingtip separation. If Wing goes acute immediately after takeoff roll, he may lightly tap the brakes one time. Take care not to “ride” the brakes and apply excessive pressure during the section takeoff roll.

**Figure 6-2 Section Takeoff Rotation**

Use peripheral vision to detect any lateral movement and use smooth rudder inputs to maintain the center of your side of the runway. If you're in position, your aircraft should lift off at approximately the same time as Lead. Use Lead's nose strut extension to anticipate and match his rotation rate and pitch attitude as you fly off the runway (Figure 6-2). If you are aft when Lead rotates, ensure you have max power selected and delay your rotation slightly to accelerate on the runway and catch up to Lead. If you're ahead of position nearing rotation, pull power slightly and **slowly** work aft. Once safely airborne, retract the gear upon Lead's signal and move into the parade position. Prebrief the pilot-not-flying to check the fuel caps for you. Any gear malfunctions in either aircraft should be announced over the intraflight radio frequency. Continue the departure in the Parade position until otherwise directed by Lead.

**WARNING**

Any time the Wingman passes the Lead aircraft during the takeoff roll, with **excessive** relative motion, the Lead aircraft will pass Dash-2 the lead over the radio and transition to the Wing position. The new Lead shall continue with normal section takeoff and departure procedures and must ensure the section remains clear of traffic and obstacles. Should this situation arise, judgment and action must be swift in both aircraft. Otherwise, there is potential for both aircraft to be in nose high attitudes, with reduced power

settings, in close proximity to the ground. Once airborne and established on departure, the Flight Leader will use the radios to reset the formation as desired.

**Common Errors**

1. Lead putting Wing on the wrong side of the runway.

2. Lead forgetting brake release signal.

3. Early and abrupt rotations by Lead.

4. Wing allowing aircraft to fall too far aft.

5. Both pilots forgetting to accomplish the last items of the Takeoff Checklist.

## 602. SECTION TAKEOFF ABORTS

If either aircraft aborts the takeoff after brake release, maintain lateral control of the aircraft and do not cross the centerline of the runway. The abort is easily recognizable because a rapid line of sight or large relative motion will develop between the aborting and nonaborting aircraft. The nonaborting aircraft will get immediate separation by checking max power and executing an individual takeoff. For this reason, Wing must maintain a minimum of 10 feet of wingtip clearance when lining up on the runway and throughout the takeoff. The aborting aircraft will execute the NATOPS abort procedures while maintaining his side of the runway. If Lead needs the section to abort, he will transmit “[tac call sign], abort, abort, abort.” In this case, both aircraft will abort, maintaining their own side of the runway.

## 603. IFR PARADE TURN EXERCISE

Flying Wing when going through weather can be a real eye-opener if you have never done it before. IFR parade flying has to be tempered with extreme caution due to several factors:

1. Wing's propeller prevents Wing from getting too close to Lead.

2. Flying through clouds may involve turbulence, which could cause a prop-strike if Wing is flying too close to Lead.

3. Wing could potentially lose sight of Lead in IMC, which may be disorienting for Wing.

IFR parade utilizes the "welded wing" concept. The wingman's position on Lead remains the same as in level flight, regardless if turning into or away. This provides the wingman a familiar point of reference to avoid possible disorientation. IFR parade is very much a teamwork concept between both aircrews. Lead must focus on being a smooth platform while Wing must be aggressive about maintaining the parade position. If in actual IMC conditions and Lead is smooth enough, Dash-2 may not realize he is in a turn unless they cross-reference the attitude

gyro. Wing needs to evaluate the in-cloud visibility to determine whether to stay with Lead or execute the lost sight procedures. Wing's greatest enemy here may be his pride as a formation pilot; don't let pride drive staying in a potentially hazardous situation. If Wing is flying off a wingtip (or a strobe) and cannot see Lead's fuselage, or if Wing is flying so close that his prop comes within inches of some part of Lead's aircraft, then Wing should do everyone a favor and separate from Lead using lost sight procedures.

## 604. IFR PARADE TURNS AWAY

In contrast to VFR turns away, during IFR turns away the wingman rotates about Lead's longitudinal axis while matching Lead's rate of roll and maintaining parade position.

The IFR turn away initially requires more power than the VFR turn away because the Wingman's relative position is above Lead in addition to being outside Lead's radius of turn. If power is not added when entering the turn, Wing will go sucked. Conversely, when the Wingman rolls out of the IFR turn away, he will initially require a larger power reduction than the roll-out for the VFR turn away.

**NOTES**

1. IFR parade turns into are flown exactly the same as a VFR parade turns into.

2. Lead will be limited to a maximum of 45° angle of bank for IFR parade turns.

## 605. IMC LOST SIGHT

Losing sight of Lead in IMC conditions can be a very hazardous situation if not handled properly by everyone in the flight. Wing may have to combat the classic physiological effects of flying in the clouds, such as the "leans," while transitioning from flying off of Lead to flying off of the instruments. If Wing goes lost sight on an instrument approach, the formation will need to be concerned about gaining separation and obstacle clearance. If there is any delay in priority handling by ATC or confusion between the involved aircraft and the controller, then do not hesitate to declare an "emergency" and pick up priority handling.

The general IMC Lost Sight procedures are addressed in Chapter 5 of this FTI. IMC lost sight procedures during an instrument approach are outlined below.

1. **Outside the Final Approach Fix (FAF) on an Instrument Approach.** Lead and Wing should initially execute the lost sight procedures in Chapter 5 of this FTI while maintaining at or above the minimum altitude for that segment of the approach (or consider using MSA/ESA). Once separation is ensured, Lead may continue the approach and should coordinate for a separate clearance for the Wingman.

2. **Inside the FAF on an Instrument approach.** Lead and Wing should initially execute the lost sight procedures in Chapter 5 of this FTI. Once separation is established, Wing will immediately execute the missed approach procedure, but will add 500 feet to all altitudes on the missed approach. This will provide separation in case Lead has to go missed approach as well. Lead may continue the approach. A separate clearance should be coordinated for the Wingman.

3. **During the Missed Approach.** Lead and Wing should execute the lost sight procedures in Chapter 5 of this FTI while conducting the missed approach procedure. Lead will fly the altitudes published for the missed approach and Wing will add 500 feet to all altitudes on the missed approach. A separate clearance should be coordinated for the Wingman.

## 606. INSTRUCTOR IFR PARADE POSITION

The T-34C is a very small aircraft and depending on in-cloud visibility, you may need to fly closer than the standard Parade position to maintain visual on Lead as the section flies in IMC. In most airplanes you can simply slide up the bearing line and "tuck-it-in", maintaining the same checkpoints. Because the T-34C has a propeller, that is not possible, therefore, the suggested IFR parade position (FOR INSTRUCTOR PILOTS ONLY) is stepped down about 8-10 feet lower and closer to Lead. The new reference is Wing centering his propeller arc below and behind Lead's same side wingtip (Figure 6-3). Wing's position is going to be such that any turbulence encountered is going to allow Wing's vertical oscillation to be clear of Lead. Wing should get into IFR parade early in order to stabilize prior to entering the clouds. Prior to conducting an extended IMC penetration and approach, Lead may consider (based on weather and the wingman's experience) splitting the formation for separate approaches. If Wing feels like anything closer than IFR parade is required, then there is no question; Wing needs to separate from Lead using lost sight procedures.

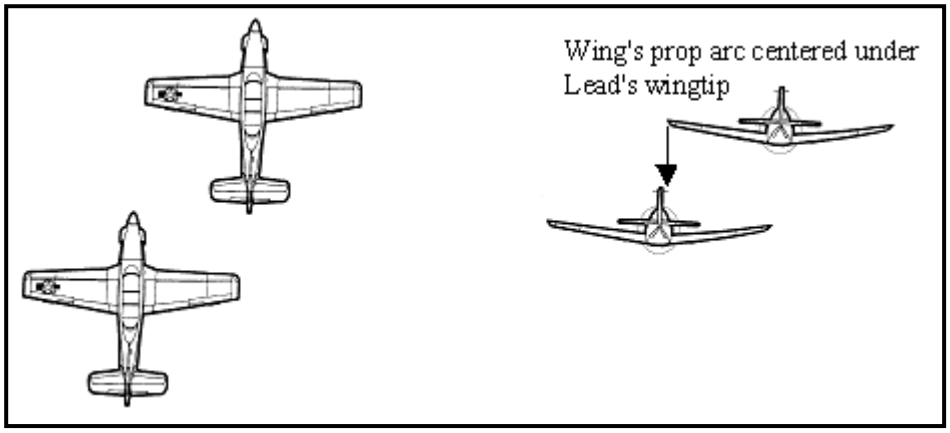


**Figure 6-3 Instructor IFR Parade Position**

**NOTE**

The “suggested” IFR parade position shall be flown by instructor pilots only. Students shall not fly the "suggested" IFR parade position and shall maintain standard parade checkpoints during the IFR Parade Turn Exercise.

## 607. SECTION APPROACH

The Section approach is used to expedite the recovery of aircraft by recovering two aircraft at a time. It can also be used as a recovery method for certain emergencies. The key to a good formation approach is for Lead to fly a smooth, accurate instrument or visual approach, and for Wing to be proactive about maintaining position. The preferred configuration is no-flap. Whichever configuration is used, Wing will always mirror Lead's configuration.

**Section Approach Restrictions.** Weather must be above circling minimums to fly a section approach or 1000 feet/3 if circling mins don't apply.

**Lead**

1. If operating VFR on top, Lead should give consideration to configuring the section prior to penetrating IMC. If VMC, Lead should intercept the final approach course and pass the gear down signal (see Chapter 9) for the formation prior to the final approach fix. If IMC and not already configured, consider using the radios to call for the gear extension. Once both aircraft are configured (no-flap preferred), Lead and Wing will check the landing gear and exchange a thumbs-up. Make the exchange so that it will not interfere with flying the approach.

2. Lead should query Tower for the current winds and position the Wingman on the upwind side. The crossunder shall not be conducted below 300 feet AGL.

3. Lead should set up the formation on the extended runway centerline 1 to 3 miles from the runway. Lead will roll out centered on his half of the runway while Wing crosschecks to ensure he is lined up with his half of the runway. If there is any confusion about which half of the runway is to be used, Wing must request clarification over the radio as soon as possible.

4. Lead should fly a normal final at no less than 100 knots.

**Section Approach as Wing.** Wing will fly the Parade position until past the final approach fix and below the weather.

**Taking Spacing On Final.** The section must take spacing on final approach so that each aircraft can land safely as single aircraft.

**Straight-In Approach.** Once Lead has the runway environment in sight, he should confirm the Wingman is visual with the runway by pointing at his eyes with first and second fingers and then pointing at the runway. Wing should confirm visual with the runway with a head nod. Lead should detach Wing as early as possible by giving the “kiss-off” signal or transmitting “[tac call sign] 2 detach.” Lead will fly a no-flap approach and if required may accelerate slightly to build spacing between aircraft. Lead should maintain centerline of his half of the runway all the way to touchdown and through the landing rollout. After the kiss-off, Wing should reduce power and establish a minimum of 1500 feet of separation between aircraft. Flaps may be used to aid in gaining separation, but once 1500 feet of separation is obtained, use power as required to maintain this distance. Wing must take extreme care to avoid a flap overspeed during the final segment of

the approach. Wing should waveoff if he does not have at least 1500 feet of spacing from Lead. Wing should maintain centerline of his half of the runway all the way to touchdown and through the landing rollout. In some cases, Lead may need to cross in front of Wing to clear the runway. In this situation, once both aircraft are under control, Wing will transmit "[tac call sign], cleared to cross" to communicate to Lead that it is safe to cross in front of him.

**Circling Approach.** Once Lead has the runway environment in sight, he should confirm the Wingman is visual with the runway. Lead detaches Wing once he commences circling by giving the “kiss-off” signal or transmitting [tac call sign] “2 detach” to Wing. Lead will fly a no-flap approach and if required may accelerate slightly to build spacing between aircraft. Lead should align on final to maintain centerline of his half of the runway all the way to touchdown. After the kiss-off, Wing should reduce power and establish a minimum of 1500 feet of separation between aircraft. Wing should use his airspeed differential and maneuvering geometry to obtain separation during the circle to land. Flaps may be used to aid in gaining separation, but once 1500 feet of separation is obtained, use power as required to maintain this distance. Wing must take extreme care to avoid a flap overspeed during the final segment of the approach. Wing should waveoff if he does not have at least 1500 feet of spacing from Lead. On final, Wing should maintain centerline of his half of the runway all the way to touchdown. In some cases, Lead may need to cross in front of Wing to clear the runway. In this situation, once both aircraft are under control, Wing will transmit “[tac call sign], cleared to cross” to communicate to Lead that it is safe to cross in front of him.

**VFR Section Pattern.** Once established in the VFR pattern at an airfield (via an instrument or visual approach), the section may elect to fly multiple patterns to practice section takeoffs and approaches in a more time efficient manner. These patterns consist of a section takeoff, a civilian-type “box pattern,” and a section approach.

The section enters the VFR pattern from an initial takeoff or a stop-and-go (a full stop landing followed by realignment of the section on the runway and a section a takeoff). Normal section takeoff procedures are used and after Wing is established in the parade position, a climbing 90° turn is made to the crosswind leg. Wing shall use IFR parade references for all turns in the pattern. Lead will direct a crossunder (above 300 feet AGL) as required to keep Wing on the outside of the pattern.

Lead levels the formation at a pattern altitude of 1200 feet AGL (unless otherwise directed) and sets 450 ft-lbs to maintain 120 KIAS. Another 90° turn is made to place the section on the downwind leg. Desired spacing from the runway on downwind is 1 to 1¼ wingtip distance. Approaching the upwind numbers, Lead begins the gear extension sequence. Lead will set 650 ft-lbs to maintain 120 KIAS on downwind and confirm both aircraft have “3 down and locked.” At this point, each aircraft shall conduct the Landing Checklist.

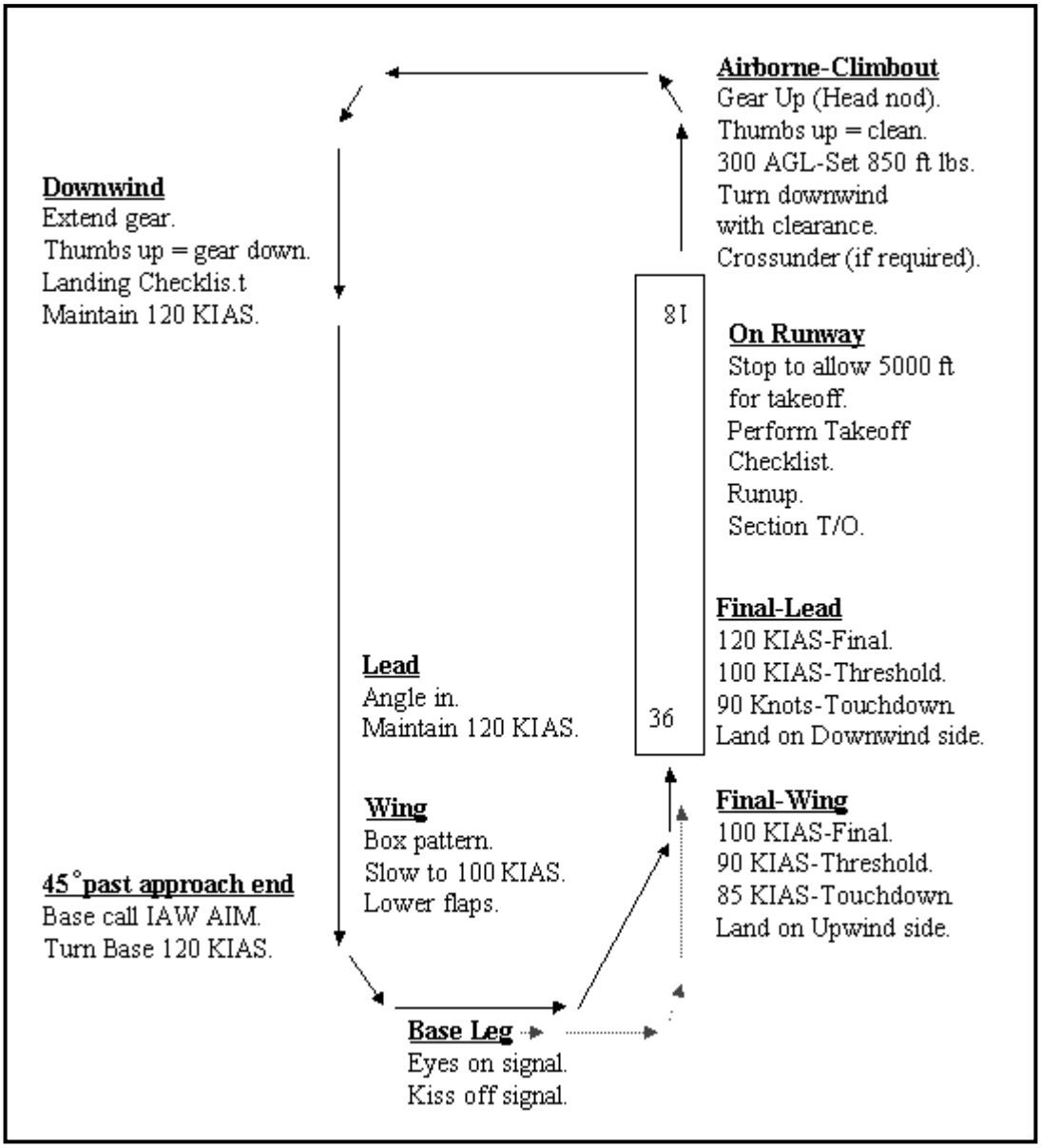


**Figure 6-4 Cruise Form Section Pattern (TW-5)**

Once the section is 45° past the approach end numbers, Lead will make his base call (e.g., "___ Tower, [Lead's call sign] flight left/right base, gear, option.") and turns 90° to the base leg of the pattern. At the initiation of this turn, a reduction in power (to approximately 450 ft-lbs) and slight descent are required to maintain a normal approach path to the runway. After rolling wings level on the base leg, Lead initiates the section separation procedures with the eyes-on signal. After Kissing off the Wingman, lead rolls into the dogleg/final turn, establishes himself on the appropriate side of the runway for the wind conditions, and flies a normal no-flap approach.

After the kiss-off, Wing should reduce power and establish a minimum of 1500 feet of separation between aircraft. Flaps and maneuvering geometry may be used to aid in gaining separation, but once 1500 feet of separation is obtained, use power as required to maintain this distance. Wing must take extreme care to avoid a flap overspeed during the final segment of the approach. Wing will line up on the centerline of his half of the runway and must have 1500 feet of separation behind Lead prior to touchdown. After touchdown and when slowed to taxi speed, both aircraft will review the After Landing and Takeoff Checklists while resetting to their respective section takeoff positions. Runway remaining must be at least 5000 feet if initiating another section takeoff (i.e., stop-and-go).

**Common Errors**

**Lead**

1. Not placing the Wingman on the upwind side.

2. Not maintaining own side of the runway all the way through the landing rollout.

3. Crossing runway centerline in front of Wing without "cleared to cross" call.

**Wing**

1. Not maintaining parade position throughout the approach.

2. Not maintaining own side of the runway on final.

3. Not clearing Lead to cross on rollout.

**Keys to Success**

1. Lead should monitor the Wingman's position throughout the approach and fly a stable platform.

2. Determine landing winds early and put the Wingman on the correct side for landing. C

3. When lining up, Lead should position on his half of the runway to provide adequate spacing for Wing.

## 608. SECTION MISSED APPROACH

Any time a missed approach is required prior to detaching Dash 2, Lead will pass the climb or “go fly” signal then slowly advance power while rotating the nose up. With a positive rate of climb, the Lead will execute the gear retraction just like a section takeoff. Once both aircraft are clean, exchange a thumbs-up and continue with the missed approach instructions.

THIS PAGE IS INTENTIONALLY LEFT BLANK

# CHAPTER SEVEN
# CRUISE FORMATION

## 700. INTRODUCTION

The cruise position, as flown in the T-34C, places Wing on Lead's 45° bearing line, with three ship-widths of lateral separation and 30 feet of stepdown (Figure 7-3). Cruise is a fluid position that can be flown on either side of Lead without directed crossunders and allows Lead maximum flexibility to maneuver the section. It is used as an enroute formation. Cruise formation is safer, requires less attention to maintain position, provides better lookout capabilities, and is more fuel-efficient for the Wingman. The goal for Wing is to maintain position (stepdown and distance from Lead) primarily by using radius-of-turn or pursuit curves (lag, lead, and pure) instead of power corrections. During the Basic formation block of training, Lead is restricted to 45º AOB level turns, and Wing is restricted to 60º AOB in Cruise.

### Parade to Cruise

### Lead

1. Pass the Cruise signal with an alternating pointing thumb over each shoulder (Figure 7-1).

2. Smoothly adjust power to 850 ft-lbs (unless otherwise briefed).

3. Maintain a stable platform until Wing is established in the Cruise position.

4. Once Wing is in position, Lead may maneuver as required.

### Wing

1. Acknowledge Lead's Cruise signal with a head nod.

2. Slide out on the 45º bearing into the Cruise position. This will require a small power reduction coordinated with a small aileron input away from Lead.

3. Approaching the Cruise position, reset power to 850 ft-lbs (unless otherwise briefed).

**Figure 7-1 Cruise Signal**

**Cruise to Parade**

**Lead**

1. Roll wings level (section can still be in a climb or descent), then signal Wing to move into Parade by gently "porpoising" the aircraft three times.

2. Smoothly adjust power (approximately 630 ft-lbs straight and level.)

3. Provide a stable platform while Wing returns to the parade position.

**Wing**

1. Observe Lead's roll out, and maintain the Cruise position on the side presently established.

2. Note Lead's signal to move into the parade position.

3. Use power and angle of bank as necessary to slide up the 45º bearing into the parade position on the side presently established.

## 7-2 CRUISE FORMATION

## 701. MAINTAINING THE CRUISE POSITION

**Lead.** Once Wing is stable in the Cruise position, commence turns in either direction using a maximum of 45º angle of bank. Execute at least two 360 turns with at least one turn reversal (or as directed by the Instructor). Lead should not adjust torque during the turns.

**Wing.** The Cruise position for Wing is basically an extended position along the same 45º bearing used for the parade position. The Cruise 45º bearing line is defined by aligning the ventral point over the aileron cutout and the tip of Lead's horizontal stabilizer lined up with the UHF antenna. Wing should also maintain approximately three wingspans of spacing and 30 feet of stepdown. Stepdown is maintained by keeping Lead's horizontal stabilizer tangent to the top, aft section of Lead's Canopy (Figures 7-2 and 7-3).

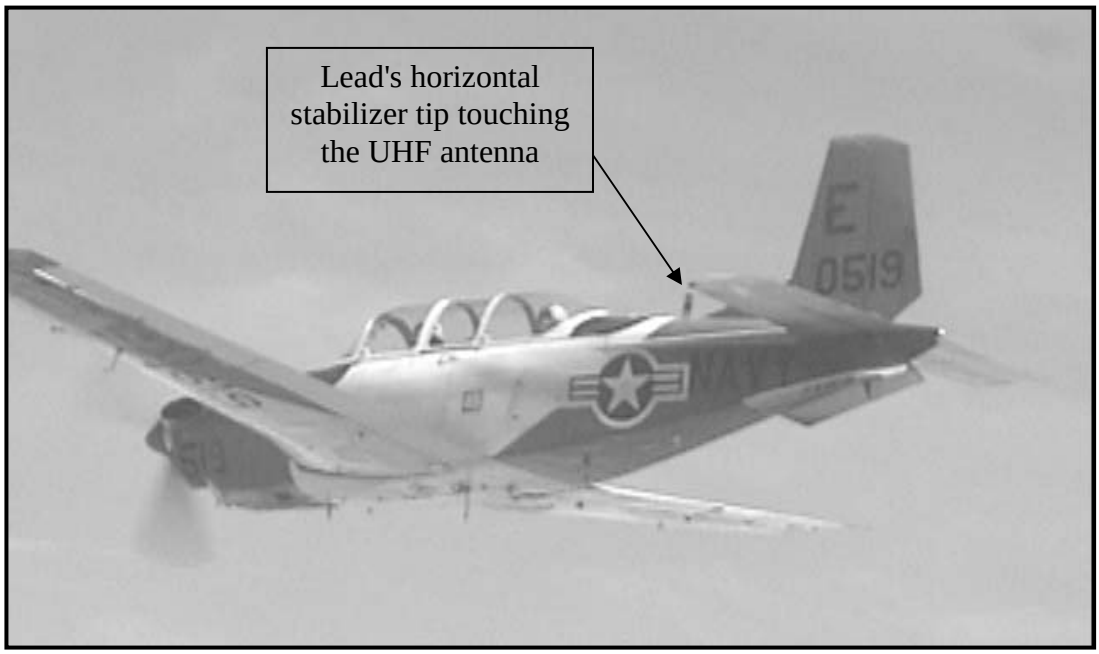


**Figure 7-2 Cruise Position Close-up**

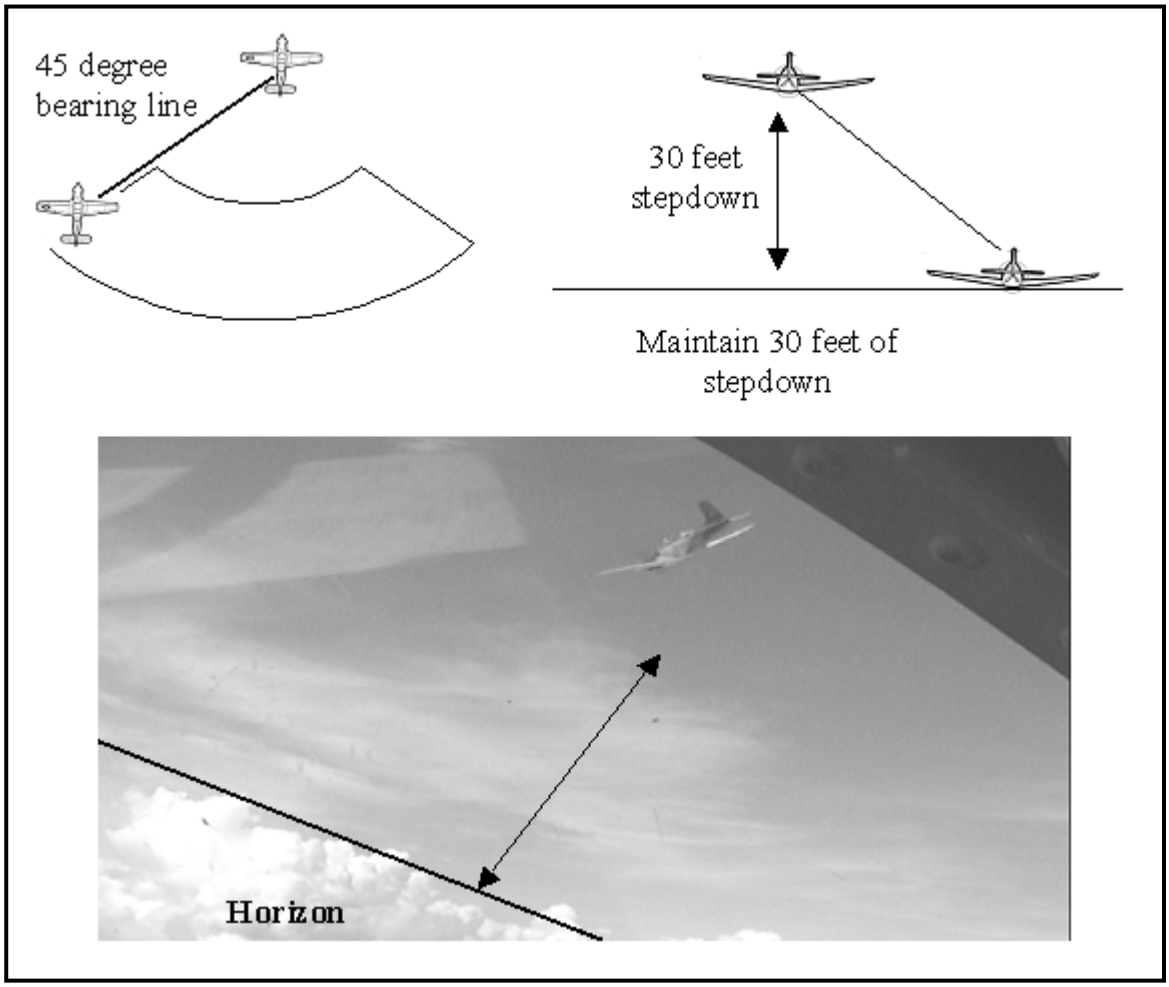


**Figure 7-3 The Cruise Position**

The goal of Cruise for Wing is to use radius-of-turn and pursuit curve principles to maintain the defined stepdown, bearing line, and relative closeness without adjusting power. Wing will only use power as a last resort to regain position. If Wing gets out of position in either turns or straight and level, he will correct position by fixing stepdown first, then offset, and finally relative closeness. Wing should strive to maintain the 45º bearing line, but may slide to the left or right side as required to maintain position.

**Cruise Turns Into.** The goal for Wing on turns into is to maintain stepdown and proper nose-to-tail separation. Wing will initially need to maneuver to Lead's tail momentarily (lag pursuit) to prevent closing on Lead, and then should maneuver to the inside of Lead's turn (lead pursuit) to hold position. Once established in the turn, lead and lag are used as required to maintain position. Too long of a delay in the initial lag can result in the Wingman being "spit out" of the turn. Lead's rate of roll will determine whether a slight lag outside or an expeditious roll to inside of Lead's turn will be required. A good reference for turns-into is to line up Lead's horizontal stabilizer with the red line portion of the star on Lead's fuselage (Figure 7-4).

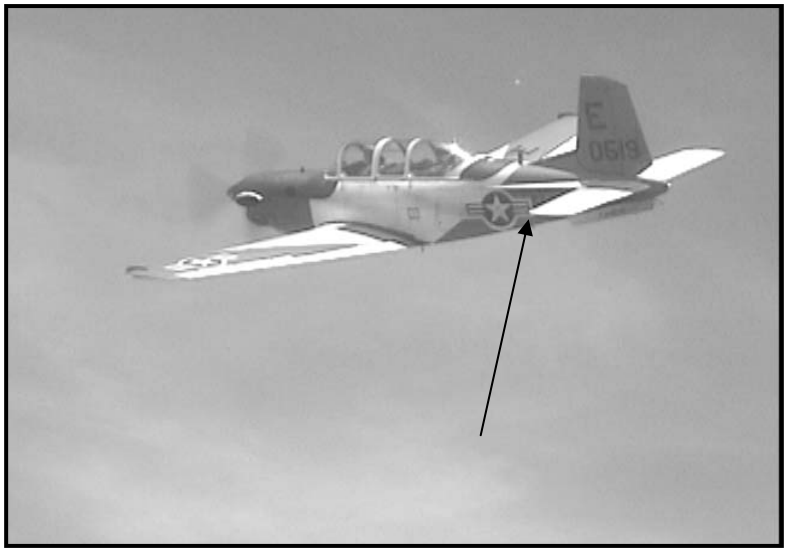

**Figure 7-4 Cruise Turns Into - Lead's Horizontal Stabilizer Lined Up With Red Line of Star**

**Cruise Turns Away.** When Lead turns away, Wing will need to maintain stepdown and maneuver towards the inside of Lead's turn (lead pursuit) in order to maintain nose-to-tail spacing. Wing should avoid stabilizing directly behind Lead. At no time should the Wingman allow himself to become stepped up on Lead.

## 702. CRUISE CLIMBS AND DESCENTS

It may be necessary to climb or descend while the section is in cruise formation. When it is necessary to climb, Lead can initiate the climb by maintaining power and raising the nose to climb at no slower than 120 KIAS. The Wingman will adjust the aircraft's nose attitude and power (if necessary) to maintain position.

If a descent is required, Lead will lower the nose and descend while maintaining power. Wing will adjust the nose attitude and power (if necessary) to maintain position. For descents of more than 1000 feet, Lead has the option of reducing power to prevent an undesired increase of airspeed. If a power reduction is desired, Lead will direct Wing via the radio to set an appropriate power setting (e.g., 400 ft-lbs.). Approaching the level off altitude, Lead will again direct an increase in power via the radio to maintain flight in cruise.

## 703. SECTION CRUISE LEAD CHANGE

### Lead

1. Signal Lead change by rocking the wings back and forth with the ailerons three times.

2. Provide a steady platform for Wing.

3. Just prior to Wing passing abeam, give the lead change signal (3 taps on the helmet, then pointing at the Wing). Wait for Wing's acceptance then maneuver to the cruise position.

**Wing**

1. After Lead's wing rock, maneuver from cruise to a position abeam Lead with a maximum of 3 ship-widths separation and on the currently established heading. Coordinate power and back stick inputs to place Lead on the horizon as you pull abeam (Figure 7-5).

**Figure 7-5 Cruise Lead Change**

2. Approaching abeam, watch for the lead change signal. Accept the lead (by patting your forehead once followed by chopping motion) when given the signal and reset power to 850ft-lbs.

3. Provide a stable platform until the new Wingman is established in the cruise position.

# CHAPTER EIGHT
# CRUISE MANEUVERING

## 800. INTRODUCTION

Cruise maneuvering teaches discipline and the proper application of three-dimensional maneuvering. In this phase of training the flight sequence is not as rigid as it was in Basic formation. This will require adaptability and flexibility on the part of all flight members. As students, you will be responsible for planning and executing the flight sequence. A solid plan will help eliminate “droning” or wasting time.

**Lead.** The role of Lead is heavily emphasized in the T-34C Cruise formation phase. The lead aircraft is responsible for the safe and effective conduct of the mission. As you practice leading these demanding sorties, try to exercise your own judgment and come up with your own plan to accomplish the mission and keep the profile moving. Be considerate of your wingman and try to provide the best possible platform at all times.

**Wing.** The Wing's role during cruise formation is to fly the position commanded by Lead in a safe manner. During dynamic formation maneuvering, Wing will be required to maintain situational awareness and maintain a safe position at all times.

## 801. CRUISE MANEUVERING OVERVIEW

**Departure Phase.** Prior to commencing the cruise formation maneuvers, Lead will establish the flight in the working area in accordance with local course rules. The departure phase will consist of the following:

1. Ground Operations

2. Section Takeoff

3. Course Rules Departure to the Working Area

4. Fence-In Check

**Cruise Formation Phase.** After completing the fence check Lead may begin the maneuvering sequence. Lead has the option to change the sequence of maneuvers in order to keep the flight in the working area and clear of clouds or other aircraft. A suggested sequence for the cruise formation maneuvers is provided below:

1. Fuel Check

2. IFR Parade Turns

3. Breakup and Rendezvous Exercise (reference Chapter 3)

4. Cruise Maneuvering

5. Tail Chase

6. Lead Change

7. Repeat Profile (steps 1-6)

**Recovery Phase.** Once the original leader has resumed the Lead, the recovery phase may commence. See current SOP/Course Rules for home field entry procedures. The instructors will assist the student if an instrument approach is required for recovery.

1. Fence-Out Check

2. Fuel Check

3. Obtain ATIS

4. Section Approach (VFR or instrument)

## 802. FENCE CHECK

**Fence-In.** Once established in the working area, Lead will command the Fence-In Check over the radio. During the Fence-In Check, each aircraft shall prepare for dynamic maneuvering by performing the Pre-Aerobatic Checklist.

**Lead:** "[tac call sign], fence-in."
**Wing:** "Two."

**Fence-Out.** When the maneuver sequence is complete, Lead will command the Fence-Out Check over the radio. During the Fence-Out Check, each aircraft will ensure the AUTO-IGNITION SWITCH is in the OFF position.

**Lead:** "[tac call sign], fence-out."
**Wing:** "Two."

## 803. ENERGY MANAGEMENT

**Definitions**. Good energy management involves using the available energy of the aircraft to perform a series of maneuvers. **Available energy is defined as a combination of airspeed (kinetic energy) and altitude (potential energy)**. Most Cruise maneuvering flights will be conducted between 5000 feet AGL and 10,000 feet MSL. Based on this altitude block, the **neutral energy state for the T-34C is 7500 feet MSL and 170 KIAS**.

**Profile Energy Management**. Due to the T-34C's limited ability to gain energy, care must be taken to preserve the proper energy level. With neutral energy any **single** cruise formation

maneuver can be performed. However, the Cruise maneuvering profile requires a series of maneuvers that may deplete energy. As a result, Lead should begin the profile with excess energy by positioning the formation at the upper end of the altitude block or energy state (8500-9500 feet MSL). In other words, if you start out at 8500 feet with 700-750 ft-lbs and maintain proper airspeed for any energy-losing maneuver, you will lose altitude by the completion of the maneuver. Energy management is crucial for smooth flow of the planned maneuvers. Below is a list of cruise formation maneuvers with respective energy planning considerations.

1. Breakup and Rendezvous (energy neutral)

2. Cruise Maneuvering (energy loser)

3. Tail Chase (energy loser)

Lead should manage the energy state to avoid climbing between maneuvers to regain energy. Lead should also strive to set a good energy state prior to passing the Lead. If the lead change occurs at a low energy state, the new Lead will have to waste time climbing to gain energy before the profile can begin.

## 804. KNOCK-IT-OFF (KIO) / TERMINATE PROCEDURES

**Knock-it-off.** The term “knock-it-off” can be called by anyone in the formation and is used to direct all aircraft to cease maneuvering **for any unsafe situation**. Following a “knock-it-off,” all flight members must vigilantly clear their flightpath and terminate individual maneuvering. Much like an underrun, the Knock-it-off call can and should be used for safety reasons when the formation aircraft need to obtain separation. When maneuvering away, the wingman must simultaneously clear in the direction of turn and notify Lead of the knock-it-off. The wingman should bank away from Lead at a rate that is commensurate with the hazard. Lead continues to maneuver in a predictable manner and broadcasts on the radios if he has to change any flight parameter (i.e., heading and altitude). If calling the Knock-it-off due to a “blind” situation, the wingman maneuvers away from Lead's last known position or direction of turn, or in any direction that ensures immediate separation. A power adjustment may help expedite separation. Lead should call out his flight parameters. Once safe separation is assured, roll out and attempt to reacquire visual contact with Lead. Advise the leader when visual contact is made. If Lead has Wing in sight and there is no further hazard, Lead should be directive and tell Dash-2 to roll out. Once visual contact is reestablished, Lead will direct a rejoin if applicable.

The following list is not all-inclusive, but a Knock-it-off shall be executed in the following situations:

1. Unable to maintain sight of the leader (“blind”).

2. The Wingman or Lead's presence constitutes a hazard to the formation.

3. Unable to remain in formation without crossing in front of the leader.

4. Emergency or Master Caution light.

5. Departing the area Boundary.

6. Descending below 5000 AGL.

7. Poor weather.

8. Traffic that will be a factor for the flight.

The radio call applies to all phases of flight and all types of dynamic maneuvers and shall use the following format:

1. **Any aircraft:** "[tac call sign] knock-it-off."

2. **Lead:** "[tac call sign] one knock-it-off."

3. **Wing:** "[tac call sign] two knock-it-off."

4. Aircraft who called the knock-it-off should communicate the reason.

If the Knock-it-off is called by Dash-2 for a blind situation the following format applies.

1. **Wing:** "[tac call sign] 2's BLIND, knock-it-off."

2. **Lead:** "[tac call sign] one knock-it-off."

3. **Wing:** "[tac call sign] two knock-it-off."

4. **Lead:** "[tac call sign] one is heading_____ at _____ feet."

5. Lead will command a rejoin once Wing obtains visual.

**Terminate.** The "terminate" call is not related to safety of flight and is typically used once training or maneuvers are complete. "Terminate" shall be called by Lead to cease or stop the Cruise Maneuvering and Tail-Chase exercises. Dash-2 can request a "terminate" if training objectives have been met. The radio call uses the same format as the "knock-it-off" call. If the call is made by Lead, the following applies:

1. **Lead:** "[tac call sign] terminate."

2. **Lead:** "[tac call sign] one terminate."

3. **Wing:** "[tac call sign] two terminate."

4. Lead will typically direct a rejoin.

## 8-4 CRUISE MANEUVERING

If the call is requested by Dash-2 the following applies:

1. **Wing:** "[TAC C/S] Two request terminate."

2. **Lead:** "[TAC C/S] terminate."

3. **Lead:** "[TAC C/S] One terminate

4. **Wing:** "[TAC C/S] Two terminate."

5. Lead will typically direct a rejoin. If Lead denies:
   **Lead:** "[TAC C/S] continue."

**Common Errors**

1. Wing fails to call Knock-it-off after encountering a situation that mandates one.

2. Wing fails to maneuver immediately when Lead calls a Knock-it-off.

3. Both aircraft lose sight of each other and Lead does not direct an altitude deconfliction.

4. Both Lead and Wing use improper communications.

5. Failure to state reason for Knock-it-off call.

## 805. CRUISE MANEUVERING

**Introduction.** Cruise Maneuvering is a series of wingover type maneuvers with the Dash-2 flying the Cruise position. Lead uses a maximum of 90° angle of bank and maintains 100-200 KIAS. Dash-2 maintains the Cruise position using lead, lag, and pure pursuit throughout the sequence.

**Energy Management.** Before initiating Cruise Maneuvering, Lead should analyze the formation's energy state and adjust it as necessary. Lead should use no more than 850 ft-lbs rolling to next pass during the exercise. **The PCL sets the energy state and the control stick adjusts airspeed, pitch, and bank angle.**

**Procedure**

**Lead:** Lead should fly a stable platform with all roll rates and pulls at a smooth and constant rate. **Lead WILL NOT adjust the PCL after setting 850 ft-lbs.**

1. Establish the section towards the center of the area with a good energy state.

2. Send Wing to the Cruise position then add power to 850ft-lbs (or as briefed) to obtain the proper energy state.

3. Once Wing is established in Cruise, initiate the wingovers by smoothly rolling into a shallow AOB, allowing the nose to fall in order to accelerate to 190 - 200 KIAS. As you reach

190-200 KIAS, roll to wings level and begin a smooth pull until the nose passes the horizon, then begin a turn in the desired direction.

4. For each turn, gradually increase the magnitude of the nose and wing displacement eventually culminating at 90° AOB maximum and no slower than 100 KIAS.

5. Execute eight wingovers, make a "terminate" call when training is complete, and proceed with the briefed sequence.

**Wing**

1. When Lead passes the Cruise signal, slide out on the 45° bearing line and stabilize in the Cruise position. Reset power to maintain the cruise position straight and level and then try not to adjust the PCL during the wingovers.

2. Use pursuit curves to maintain the proper cruise position throughout Cruise Maneuvering and, if required, request a "terminate" when training objectives are met.

**Common Errors**

**Lead**

1. Fails to give Wing enough time to stabilize in the Cruise position before commencing the wingovers.

2. Fails to maintain airspeed between 100-200 KIAS.

3. Fails to monitor Wing's position during the turns (visual lookout).

4. Rough airwork (ratcheting the wings).

5. Fails to maintain positive G (unloading).

6. Exceeds 90° of bank.

**Wing**

1. Allows excessive separation to develop without establishing lead pursuit to fix spacing.

2. Slow to maneuver to lag pursuit during turns into and gets acute.

3. Uses excessive power.

4. Fails to maintain proper stepdown.

**Keys to Success**

1. Lead should conduct the first turn into Wing to better enable Dash-2 to firmly establish their position.

2. If Wing is out of position, Lead should give a turn into instead of a turn away.

3. Lead should avoid airspeed in excess of 200 KIAS in order to preserve energy.

4. Wing needs to anticipate turns and use lead, lag, or pure pursuit to maintain position inside of leads turn.

## 806. TAIL-CHASE EXERCISE

**Introduction**. Tail-chase is probably the most challenging maneuver in the Cruise formation syllabus. Tail-chase incorporates everything that you have learned about bearing lines, pursuit curves, and energy management and uses these tools in three dimensions. The goal of this exercise is to demonstrate the effects of lead, lag and pure pursuit on nose-to-tail distance. The goal for Lead is to provide a smooth platform so that Wing can maintain position. Lead will execute a series of maneuvers, maintaining airspeed between 100 to 200 KIAS. The goal for Wing is to use lead, lag, pure pursuit, and power as required to maintain the aircraft 600 to 800 feet behind Lead's six o'clock position.

**Collision Avoidance.** Each aircrew member shares the responsibility for collision avoidance. The wingman should always be "visual" on Lead so he retains primary responsibility for deconfliction between the aircraft. This responsibility transfers to the flight lead if the wingman becomes blind or is placed in a blind position during maneuvering.

**Lead Considerations.** Lead is responsible for maneuvering the formation within the working area and at an energy level that is conducive to high angle of bank maneuvering. The concepts below will help to ensure success.

1. Begin in the middle of the airspace with good energy. Tail-chase requires a lot of vertical maneuvering. Using a ground reference in the middle of the area or along the area boundary is not required but will help you to stay orientated.

2. As Lead, never pull more than 3 Gs, never get slower than 100 KIAS nor faster than 200 KIAS. This will preserve energy and allow Dash-2 to maintain position.

3. Lead should monitor Wing during the maneuvers. If Dash-2 is out of position, Lead should execute the next maneuver into Wing to provide better angles to get back into position.

4. Tail Chase may not be accomplished below 5000 feet AGL. If either aircraft descends below 5000 feet AGL, a "KNOCK-IT-OFF" shall be called.

**Lead Procedures.** Lead is limited to 120° of bank for the wingovers and should maintain airspeed between 100-200 KIAS for all maneuvers. Lead's procedures are outlined below:

1. Establish the section towards the center of the area with a good energy state.

2. Direct the Tail Chase to begin by passing the visual signal, arm raised with thumb and forefinger extended simulating cocking a gun (Figure 8-1).

**Figure 8-1 Tail-Chase Signal**

3. After Dash-2 acknowledges the signal with a head-nod, pass the kiss-off signal and begin a 2 G, level, 60° angle of bank turn **away from the wingman** and reset the PCL to 1015 ft-lbs.

4. Continue the turn until Dash-2 calls “[tac call sign] 2's in.” After the “2's in” call, Lead may begin maneuvering.

5. **THE TAIL CHASE WINGOVER**

   a. Allow the nose to fall to achieve 190-200 KIAS, then commence a wings level pull until the nose passes the horizon. Set the bank angle at 30 to 60 degrees and pull the nose up (20-40 degrees nose high).

   b. As the airspeed approaches 100 KIAS, expeditiously roll to 120° of bank and pull down to approximately 20-40 degrees nose low.

## 8-8 CRUISE MANEUVERING

c. Reset the bank angle to 30 to 60 degrees. As the airspeed approaches 200 KIAS, roll toward the wings level position and commence a pull to continue the series of wingovers.

d. Lead should attempt to alternate the direction of the wingovers during the profile.

6. **THE TAIL CHASE BARREL ROLL.** The tail chase barrel roll is similar to the Contact barrel roll in execution. The key is a good energy exchange between 200 knots to no slower than 100 knots at the top. Keep the nose tracking throughout the maneuver and ensure the airplane is through WINGS LEVEL inverted flight before the nose falls through the horizon.

a. Allow the nose to drop to attain 190 to 200 knots.

b. With airspeed, roll wings level and pull into the vertical to approximately 50 to 60 degrees nose high and start to roll towards the 3 or 9 o'clock position.

c. Adjust the roll so that you reach your target of 100 knots inverted, hold positive G throughout the maneuver, and keep the nose tracking through the maneuver.

d. On the backside of the maneuver, allow aircraft to accelerate to 190 to 200 KIAS.

7. Execute eight maneuvers (any combination of wingovers and barrel rolls as required for area management) and make a "terminate" call when training objectives are met.

8. Command a turning rejoin with a wing flash of at least 45° AOB (left or right, as required for area management), then set 20° AOB and maintain 150 KIAS for Dash-2's join-up. From this point, both aircraft shall use Breakup and Rendezvous procedures to facilitate Dash-2's rejoin.

**Wing Procedures**

1. Acknowledge Lead's Tail-Chase signal with a head-nod.

2. After Lead breaks, set 1015 ft-lbs. and turn to follow when abeam Lead. Using pursuit curves position Lead at you 11 or 1 o'clock position (depending on direction of turn) with 600 - 800 feet of spacing. Once in position and ready to maneuver call “[tac call sign] 2 is in.”

3. Maintain the tail chase position using lead lag and pure pursuit.

4. Respond to Lead's “terminate” call (Dash 2 may also request the terminate).

5. **WHEN LEAD COMMANDS THE REJOIN, ADJUST THE PCL TO MAINTAIN 150 KIAS AND MANEUVER THE AIRCRAFT TO RENDEZVOUS WITH LEAD.**

**Maintaining position.** The goal of Tail Chase is to learn three-dimensional maneuvering in relation to another aircraft and the effects of pursuit curves on nose-to-tail distance. Wing should use lead, lag, pure pursuit and power adjustments as required to maintain proper nose-to-tail separation as lead maneuvers.

1. **Pursuit Curves.** Wing must select the proper pursuit curves (lead, lag, pure) during tail chase to maintain position. Pursuit curves can manage both bearing line and range. If too far aft (greater than 800 feet), Wing will need to maneuver to the inside of Lead's turn, (lead pursuit) to reduce range. Conversely, if too close (inside 600 feet), Wing will need to maneuver to the outside of leads turn (lag pursuit) and increase range. Pure pursuit will hold or decrease range slightly.

2. **G-Load.** Wing uses Gs to achieve maximum performance of his aircraft which allows him to maintain position or proper energy level.

3. **Power.** Wing should try to minimize power adjustments; however reducing power will help increase nose-to-tail distance and increasing power will reduce nose-to-tail distance.

**Wing Considerations**

1. In general, Wing should maintain pure pursuit with **momentary** bids to lead and lag pursuit to manage bearing line, range, and closure rate.

2. If Wing is demanding too much from the aircraft he may experience **momentary** rudder shakers. If rudder shakers are experienced, Wing should ease off the pull slightly. **Do not push the stick abruptly forward to get out of the shakers.**

3. Tail chase may not be accomplished below 5000 feet AGL. **If either aircraft descends below 5000 feet AGL, a "KNOCK-IT-OFF" shall be called.**

Common Student Errors

**Lead**

1. Allows the nose to pass through the horizon while still inverted in the Barrel Roll. (Buries the nose.)

2. Fails to maintain airspeed between 100 to 200 KIAS.

3. Fails to monitor Wing's position (visual lookout).

4. Executes maneuvers too close to area boundaries, causing Wing to fly through the boundaries.

5. Fails to maintain positive G (unloading).

6. Pulls more than 3 Gs at the bottom of any maneuver.

**Wing**

1. Loses sight of Lead.

2. Allows excessive separation to develop without establishing lead pursuit to fix spacing.

3. Is slow to maneuver to lag pursuit during turns into and gets too close.

4. Uses excessive power.

5. Pulls lead pursuit too early in the vertical plane.

THIS PAGE INTENTIONALLY LEFT BLANK

# CHAPTER NINE
# FORMATION VISUAL SIGNALS

## 900. INTRODUCTION

Visual signals between formation aircraft are utilized to reduce the need to coordinate common formation tasks on the radio. Use visual signals to the maximum extent possible. Formation visual signals also have a tactical benefit in that they allow communication between flight members without the use of radio emissions (which could reveal the location of the formation). Good formation discipline depends on the proper use and execution of visual signals. Poor visual signals could cause a very common task to become hazardous and lead to confusion.

## 901. PASSING SIGNALS

Announce what signal you are going to pass over the Intercommunications System (ICS) before initiating the signal. **When initiating any signal as Lead pass the signal while looking forward, even when on the ground, then pull the signal down and look at Wing for a response (if required).**

This action will reduce the time spent looking aft, thus enhancing outside scan and basic airwork. All hand signals, except the Lead change, will be given with the hand nearest your Wingman. **All optional signals do NOT require an acknowledgement.** On F4001 both the student and the instructors will pass signals. On F4002-5 instructors are not required to pass signals.

## 902. GENERAL SIGNALS

| | MESSAGE TO BE SENT | SIGNAL |
|---|---|---|
| 1. | Affirmative (I understand, ready). | Thumbs-up, or head nod. |
| 2. | Negative (I do not know, not read). | Thumbs-down, or turn of head from side to side. (Shake-off signal). |
| 3. | Wait. | Hand held up with palm outward. |
| 4. | Ignore last signal. | Hand waved in an erasing motion in front of face (palm turned forward). |
| 5. | Numerals. | With forearm vertical, extend fingers to indicate desired number from 1 to 5. With forearm horizontal, indicate number which, added to 5, gives the desired number from 6 through 9. A clenched fist indicates zero. |
| 6. | “Eyes-on” landing environment. | Lead points to eyes with two fingers, then raises forearm horizontally with fingers extended, palm inward, pointing in direction of runway. |

## 903. RUNUP

| MESSAGE TO BE SENT | SIGNAL |
|---|---|
| 1. Your propeller is in feather. | Give thumbs-down and then forearm vertical, hand extended, palm flat, fingers together, rotate hand back and forth rotating about the wrist (hand stays vertical) (Figure 9-1). |

**Figure 9-1 Propeller in Feather Signal**

2. Improper lighting configuration. Point index and middle finger at your eyes (Figure 9-2).

**Figure 9-2 Improper Lighting Configuration Signal**

3. Your canopy is open. Give thumbs-down and then use both hands to simulate pushing the canopy closed (hands over head) (Figure 9-3).

**Figure 9-3 Canopy is Open Signal**

| | |
|---|---|
| 4. Your flaps are down. | Give thumbs-down and then raise forearm vertical, bend hand at wrist and open and close fingers to thumb several times (like you're hand is "talking") (Figure 9-4). |

**Figure 9-4 Flaps are Down Signal**

## 904. TAKEOFF, SECTION TAKEOFF

| MESSAGE TO BE SENT | SIGNAL |
|---|---|
| 1. My engine instruments check good, your aircraft configuration checks good, and panels secure with no visible leaks. | Thumbs-up. |
| 2. Signal to release brakes (section takeoffs only). | Same side forearm bent vertically, slowly extend to horizontal in chopping motion. When arm is parallel with canopy rail, release brakes. |

## 905. CLIMBOUT, AREA, DESCENT

Optional signals are given at Lead's discretion when something is going on in flight that may not be obvious to Wing. **Checking the Wingman in position and the area clear will preface all in-flight signals.** Make these checks with exaggerated head movements to give Wing a warning you're going to give a visual signal. **All optional signals do NOT require an acknowledgement.**

| MESSAGE TO BE SENT | SIGNAL |
|---|---|
| **(** = OPTIONAL)** | |
| 1. I am going to start a climb to a higher altitude.** | With fingers extended, palm down, motion slowly fore and aft with a climbing attitude. |
| 2. I am going to descend.** | With fingers extended, palm down, motion slowly fore and aft with a descending attitude. |
| 3. Level off.** | With fingers extended, palm down, motion slowly side-to-side over the glareshield in a level attitude. |
| 4. I am going to reduce power.** | Head tilted backward three times. |
| 5. I am going to add power.** | Head tilted forward three times. |
| 6. I am turning right or left.** | Head tilted right or left from vertical three times. |
| 7. I am rolling out on this heading.** | Lead, with forearm vertical, hand open, and fingers together, executes a chopping motion forward. |
| 8. Wingman crossunder to other wing. | Extend forearm vertically with fist clenched. |
| 9. I am offering the lead to you. | Lead taps his helmet three times while looking forward and then points at the Wing. |
| 10. I have the lead. | Wing pats forehead once with near hand, gives rollout signal (chopping motion), and looks forward. |
| 11. I am leaving formation. (“kiss-off signal”). | Hold fist to Wingman's side of helmet and extend all fingers outward. |

| | |
|---|---|
| 12. Aircraft Lead indicates who should leave formation. | Lead points at aircraft to leave formation and gives “kiss-off signal.” |
| 13. Breakup and Rendezvous Exercise. | Raise same side hand, make a fist with two fingers extended, and make three small circles with fingers. |
| 14. Parade to Cruise. | Alternate pointing thumb over each shoulder. |
| 15. Cruise to Parade. | Gently porpoise aircraft three times. |
| 16. Cruise Lead Change. | Rock the wings back and forth with the ailerons three times. |

## 906. RADIO COMMUNICATIONS

**After passing a frequency change signal (preset or manual), Lead should look at Wing to acknowledge the frequency change with a head nod.**

| MESSAGE TO BE SENT | SIGNAL |
|---|---|
| 1. Shift radio to preset frequency as indicated by numerals. | Tap earphone and indicate by fingers the numerals of the channel to which shifting. |
| 2. Switch to manual frequency. | Tap helmet on same side with flat fingers three times, then hold forearm vertical and make rotating hand motion like you are "screwing in a light bulb." Rotate three times, then give frequency as described in numerals above, one number at a time. |
| 3. I have taken over communications. | Tap earphones, followed by patting head and pointing to self. |
| 4. Take over communications. | Tap earphones followed by Lead pointing at Wing. |

## 907. AIRCRAFT AND ENGINE OPERATION

**After passing fuel check signal, Wing should respond with fingers indicating hundreds of pounds remaining or over tactical frequency.**

| MESSAGE TO BE SENT | SIGNAL |
|---|---|
| 1. Perform gas check. | Raise fist with thumb extended in a drinking position. |

2. Lower landing gear.

**Prep:** Rotate hand in cockpit as if cranking wheels (Figure 9-5).
**Execute:** One head nod up/back.

**Figure 9-5 Aircraft and Engine Operation Signals**

3. Raise landing gear.

**Prep:** Lead bows head to place chin on his chest.
**Execute:** One head nod up/back.

4. Open or close flaps.

**Prep:** Open or close four fingers and thumb very slowly, three times.
**Execute:** One head nod up/back.

**908. EQUIPMENT MALFUNCTION / HEFOE SIGNALS (used only with radio failure)**

| MESSAGE TO BE SENT | SIGNAL |
|---|---|
| 1. Radio receiver or transmitter, inoperative as appropriate. | Tap microphone or earphone, give thumbs-up or down, as appropriate. |
| 2. Ejecting or bailing out. | Pull both clenched fists pulled downward across the face to simulate pulling a face curtain. |

3. I am having difficulty (followed by one or more of the signals listed below). Bend arm across forehead in "weeping" gesture (Figure 9-6).

**Figure 9-6 Equipment Malfunction / HEFOE Signals**

4. Hydraulic trouble. Extend one finger upward.

5. Electrical trouble. Extend two fingers upward.

6. Fuel trouble. Extend three fingers upward.

7. Oxygen trouble. Extend four fingers upward.

8. Engine trouble. Extend five fingers upward.

THIS PAGE INTENTIONALLY LEFT BLANK

**APPENDIX A**
**GLOSSARY**

ABEAM: A position, either port or starboard, which is 90º off the longitudinal axis of the aircraft.

ACUTE: A condition in which the Wingman is incorrectly positioned forward of a designated bearing line.

BEARING LINE: An imaginary line drawn from the Lead to the Wing aircraft. Usually identified by selected visual checkpoints and referred to as an angle off the longitudinal axis of the lead aircraft.

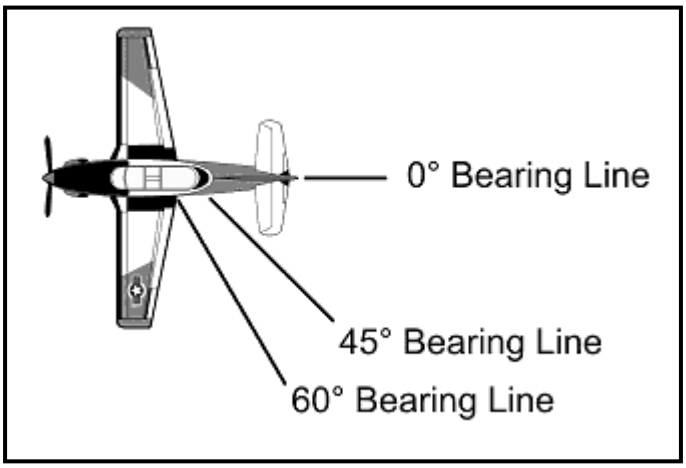


**Figure A-1 Bearing Line**

BLIND: A term used to communicate visual contact is lost with a member of the formation while maneuvering in VMC (opposite of "Visual").

BREAKUP: A maneuver utilized to separate formation aircraft and establish them in trail.

CHECKPOINT: A selected point or set of points on the lead aircraft, which are utilized by the Wingman to determine relative position.

CLOSURE RATE: Overtake created by airspeed or angular advantage; can be positive or negative.

CROSSUNDER: A maneuver utilized to change the position of the Wing aircraft from one side of Lead to the other.

CUTOUT: A visual checkpoint referring to the outermost corner of that portion of the wing cut out to allow installation of the aileron.

DASH TWO, DASH THREE, ETC.: A term used to refer to successive Wingmen in a formation.

FLIGHT INTEGRITY: The ability of the Wingman to maintain the proper relative position while the formation is performing maneuvers.

HUNG ON THE BEARING: A condition during the rendezvous where the wing aircraft ceases to continue closing on the Lead aircraft.

LAG PURSUIT: A maneuver used by Wing when Lead is in a turn to increase nose-to-tail separation and range. Wing maneuvers to the outside of Lead's turn by pointing the nose of the aircraft behind Lead's tail.

LEAD PURSUIT: A maneuver used by Wing when Lead is in a turn to decrease nose-to-tail separation and range. Wing maneuvers to the inside of Lead's turn by pointing the nose of the aircraft in front of Lead.

LOST SIGHT: Term used by the Wingman to communicate he has lost visual contact with the lead aircraft while flying in IMC.

MIDPOINT: A visual checkpoint referring to the point on the underside of the Lead aircraft's wing, equidistant from the wing tiedown and the wing cavity moisture scupper drain.

NOSE-TO-TAIL: The distance from the nose of the wing aircraft to the tail of the lead aircraft.

PARADE POSITION: A fixed position on the 45º bearing line on either the port or starboard side of the lead aircraft with 10 feet of stepdown, 20 feet of nose-to-tail, and 4 feet of wingtip separation.

PARADE RATE OF ROLL: A roll rate in which 30º angle of bank is achieved after 30º of heading change. Parade rate of roll is referenced to the lead aircraft with the idea of ensuring lead is a smooth platform for the Wingman. The intent here is for Lead to start a turn and roll to the desired bank angle with one smooth constant rate.

PROP ARC: A visual checkpoint referring to the outermost portion of the circle created by the tips of the propeller blades in motion.

PURE PURSUIT: A maneuver used to follow Lead's flight path in a turn. Wing maneuvers by pointing the nose of the aircraft directly at Lead. Nose-to-tail separation and range will decrease slightly but with a slower closure rate than lead pursuit.

PLANE OF MOTION: An imaginary plane defined by the aircraft's flight path.

RENDEZVOUS: A maneuver in which the formation aircraft are maneuvered into a position where a join-up may be performed.

SHAKE OFF: A visual signal given by the Wingman to indicate he does not understand the Lead's signal or is not prepared to execute the next maneuver or required action. Shake off is giving a head shake back and forth indicating "negative."

STACK: A visual checkpoint referring to the trailing edge of either exhaust stack.

STEP: A visual checkpoint referring to the step located on the port side of the fuselage below the rear cockpit canopy rail.

STEPDOWN: The vertical distance between the Lead and Wing aircraft.

SUCKED: A condition in which the Wingman is incorrectly positioned aft of a designated bearing line.

TURN CIRCLE: The flight path described by an aircraft in a turn.

TURN RADIUS: The distance between an aircraft's flight path and the center of the turn circle.

TURN RATE: The change in heading expressed in degrees per second at which an aircraft is turning.

TRAIL: A formation position in which Wing is directly behind Lead.

UNDERRUN: A maneuver utilized to allow the Wing aircraft to pass below, behind, and outside the Lead aircraft's flight path in the event the rendezvous closure rate becomes excessive.

VENTRAL POINT: A visual checkpoint referring to the forward, lowest point of the ventral fin.

VISUAL: A term used to communicate positive visual contact with an aircraft in the formation (opposite of "Blind").

**THIS PAGE INTENTIONALLY LEFT BLANK**