NAVAL AIR TRAINING COMMAND

NAS CORPUS CHRISTI, TEXAS **CNATRA P-1216 (Rev. 5-12)**

FLIGHT TRAINING INSTRUCTION

OUT-OF-CONTROL FLIGHT
T-45 STRIKE

2012

DEPARTMENT OF THE NAVY
CHIEF OF NAVAL AIR TRAINING
250 LEXINGTON BLVD SUITE 102
CORPUS CHRISTI TX 78419-5041

CNATRA P-1216
N715
13 Nov 12

CNATRA P-1216 (Rev. 5-12)

Subj: FLIGHT TRAINING INSTRUCTION, OUT-OF-CONTROL FLIGHT, T-45 STRIKE

1. CNATRA P-1216 (Rev. 5-12) PAT, "Flight Training Instruction, OUT-OF-CONTROL FLIGHT T-45 STRIKE" is issued for information, standardization of instruction, and guidance for all flight instructors and student aviators within the Naval Air Training Command.

2. This publication shall be used as an explanatory aid to the T-45 STRIKE Curricula. It will be the authority for the execution of all flight procedures and maneuvers herein contained.

3. Recommendations for changes shall be submitted via CNATRA TCR form 1550/19 per CNATRAINST 1550.6E.

4. CNATRA P-1216 CH 1-2 (09-08) PAT is hereby cancelled and superseded.

C. HOLLINGSWORTH
Chief of Staff

Distribution:
CNATRA Website

FLIGHT TRAINING INSTRUCTION

FOR

OUT-OF-CONTROL FLIGHT

T-45 STRIKE

P-1216

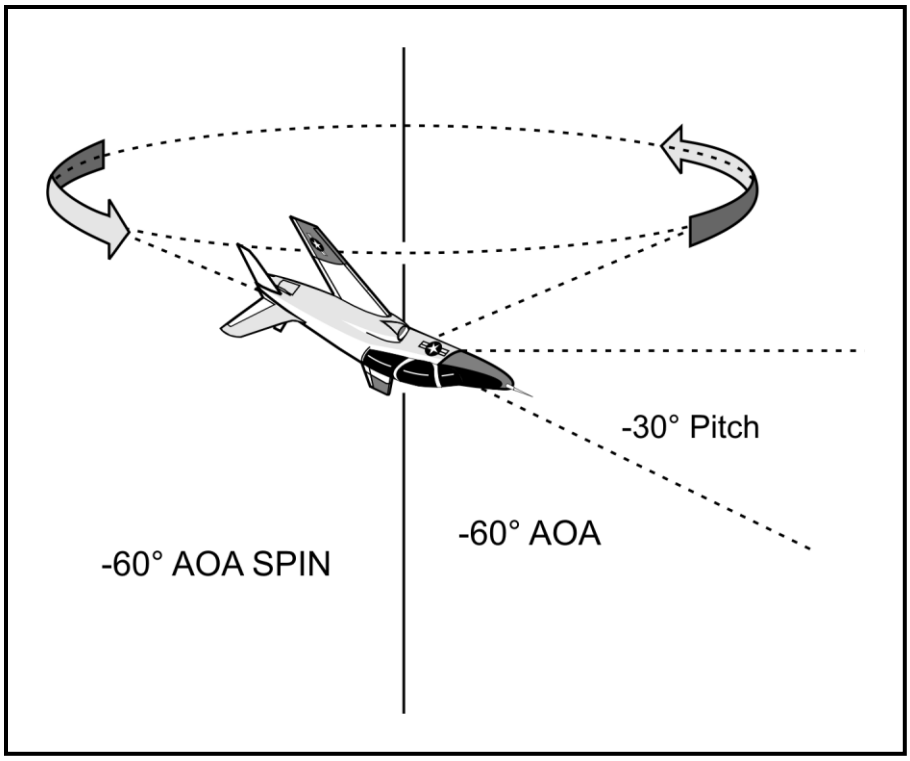

HOW TO USE THIS FTI

This Flight Training Instruction (FTI) is your textbook for the Out-of-Control Flight (OCF) stage of your Jet Pilot Training and is the source document for all procedures related to OCF. In addition, it includes suggested techniques for performing each maneuver and making corrections.

Use your FTI to prepare for and afterward to review lessons and flights. This information will help you effectively prepare for lessons: know all the procedures in the assigned section(s), review the glossary, and be prepared to ask your instructor about anything that remains unclear. Then you can devote your attention to flying the T-45. After a flight, review the FTI materials to reinforce your understanding and to clarify any difficult maneuvers or procedures.

Note that this FTI also contains information on ejection situations related to this stage. This information amplifies but ***does not supersede*** the emergency procedures information contained in the T-45 NATOPS manual.

Reading requirements for flight procedures lessons (lectures) are listed in Appendix A, "Lesson Preparation," along with the course learning objectives. The end-of-stage exam will be based on these objectives. Complete the required reading prior to each lesson (lecture).

LIST OF EFFECTIVE PAGES

Dates of issue for original and changed pages are*:*
Original...0...15 Feb 07 (this will be the date issued)
Revision1…0…12 Sep 08
Revision2…0…13 Nov 12

TOTAL NUMBER OF PAGES IN THIS PUBLICATION IS 66 CONSISTING OF THE FOLLOWING:

Page No.	**Change No.**	**Page No.**	**Change No**
COVER	0	5-1 – 5-2	0
LETTER	0	6-1	0
iii-x	0	6-2 (blank)	0
1-1 – 1-2	0	A-1 – A-3	0
2-1 – 2-24	0	A-4 (blank)	0
3-1 – 3-10	0	B-1 – B-2	0
4-1 – 4-8	0	C-1 – C-2	0

INTERIM CHANGE SUMMARY

The following Changes have been previously incorporated in this manual:

CHANGE NUMBER	REMARKS/PURPOSE

The following interim Changes have been incorporated in this Change/Revision:

INTERIM CHANGE NUMBER	REMARKS/PURPOSE	ENTERED BY	DATE

TABLE OF CONTENTS

HOW TO USE THIS FTI ..... **iv**
LIST OF EFFECTIVE PAGES ..... **v**
INTERIM CHANGE SUMMARY ..... **vi**
TABLE OF CONTENTS ..... **vii**
TABLE OF FIGURES ..... **ix**

CHAPTER ONE - INTRODUCTION TO OUT-OF-CONTROL FLIGHT **1-1**
100. INTRODUCTION 1-1

CHAPTER TWO - AERODYNAMIC PRINCIPLES **2-1**
200. AERODYNAMIC DEFINITIONS 2-1
201. EFFECTS OF MASS DISTRIBUTION 2-6
202. FIVE PHASES OF OUT-OF-CONTROL FLIGHT 2-8
203. OUT-OF-CONTROL RECOGNITION 2-11
204. INSTRUMENT INDICATIONS 2-13
205. THE ERECT OR UPRIGHT SPIN 2-14
206. INVERTED SPINS 2-17
207. RECOVERY 2-18
208. RECOVERY FROM STEADY-STATE SPINS 2-19
209. PROGRESSIVE SPINS 2-21
210. HIGH-SPEED SPIRALS 2-22
211. PILOT FACTORS IN OUT-OF-CONTROL FLIGHT 2-22

CHAPTER THREE - T-45 OUT-OF-CONTROL FLIGHT CHARACTERISTICS **3-1**
300. T-45 STALL CHARACTERISTICS 3-1
301. DIRECTIONAL DEPARTURES 3-2
302. VERTICAL MANEUVERING AND DEPARTURES 3-2
303. POST-DEPARTURE GYRATIONS 3-3
304. SPINS 3-3
305. ERECT OR UPRIGHT SPINS 3-7
306. RECOVERY FROM AN UPRIGHT SPIN 3-8
307. DEPARTURE RECOVERY PROCEDURES 3-9
308. NATOPS DEPARTURE SPIN PROCEDURES 3-10

CHAPTER FOUR - OUT-OF-CONTROL SYLLABUS MANEUVERS **4-1**
400. HIGH AOA DEEP STALL INVESTIGATION/RUDDER-INDUCED DEPARTURE 4-2
401. LOW-AIRSPEED DEPARTURES 4-3
402. LATERAL STICK ADVERSE YAW DEPARTURE 4-5
403. TURNS 4-5
404. VERTICAL MANEUVERING 4-6
405. ONE-CIRCLE FIGHT 4-6
406. DEFENSIVE DRILLS 4-6
407. TWO-CIRCLE FIGHT (EXTENSIONS/PITCH-BACKS) 4-7

408. ACCELERATION DEMO 4-7
409. FLAT SCISSORS DEMO 4-7
410. ROLLING SCISSORS DEMO 4-7

CHAPTER FIVE - CONCLUSION TO OUT-OF-CONTROL FLIGHT 5-1
500. CONCLUSION 5-1

CHAPTER SIX - SELF TEST 6-1

APPENDIX A - GLOSSARY A-1

APPENDIX B - STUDY GUIDE B-1

APPENDIX C - INDEX C-1

TABLE OF FIGURES

Figure 2-1 Aircraft Angle of Attack 2-1
Figure 2-2 Yaw Angle 2-2
Figure 2-3 Sideslip Angle 2-3
Figure 2-4 Directional Stability States 2-4
Figure 2-5 Body Axis System 2-5
Figure 2-6 Effects of Mass Distribution 2-7
Figure 2-7 Pitchup Due to Inertial Coupling 2-8
Figure 2-8 T-45 Key Stall AOAs 2-9
Figure 2-9 Departure Boundary 2-10
Figure 2-10 G Forces with Spin Aft of Cockpit 2-13
Figure 2-11 Aerodynamics of a Spin 2-15
Figure 2-12 Autorotation in T-45 Aircraft 2-16
Figure 2-13 Aerodynamics of High-Speed Aircraft 2-17
Figure 2-14 T-45 Out-of-Control Flight and Recovery Sequences 2-19
Figure 2-15 Tail Design 2-20
Figure 2-16 Erect Spin Recovery Controls 2-21

Figure 3-1 T-45 Spin Modes 3-4
Figure 3-2 Inverted Spin 3-5
Figure 3-3 Upright Spin 3-8

NOTES

CHAPTER ONE
INTRODUCTION TO OUT-OF-CONTROL FLIGHT

100. INTRODUCTION

This FTI will provide supplemental aerodynamic background information and establish procedures for Out-of-Control flight training. It is designed to provide you with the fundamental knowledge necessary to recognize, analyze, and recover from the loss of aerodynamic control of the aircraft. Out-of-Control flight will be addressed in several stages of the curriculum, so consequently you will use this FTI in conjunction with other FTIs throughout your training.

Flight at high AOA and/or slow airspeed is an inherent part of offensive and defensive maneuvering, and many tactical situations dictate that you fly the aircraft to the limits of its controllability. Reluctance to fly in this regime because of possible departure from controlled flight not only limits the aircraft's maneuvering capability, but greatly reduces its effective employment as a weapons platform. The confidence factor necessary to operate under these flight regimes is directly proportional to your ability to correctly recognize, analyze, and recover from the occasional out-of-control flight condition associated with high AOA maneuvering. Prior training, actual flight experience, and exposure to departures and post-departure gyrations are essential to enable you to function efficiently in this regime.

What is OCF?
Answer: The moment in time when unexpected results occur from normal control inputs!

Why do we practice OCF maneuvers?
Answer: Builds confidence in your ability to regain control after an inadvertent OCF incident.

NOTES

CHAPTER TWO
AERODYNAMIC PRINCIPLES

200. AERODYNAMIC DEFINITIONS

Before discussing the aerodynamics of out-of-control flight, we will review some of the pertinent definitions. Review your Aerodynamics Lesson Guide for more in-depth discussions.

ANGLE OF ATTACK (AOA or α)

Angle of Attack is the instantaneous angle between a reference line on the aircraft (usually the wing chord line) and the relative wind direction (Figure 2-1).

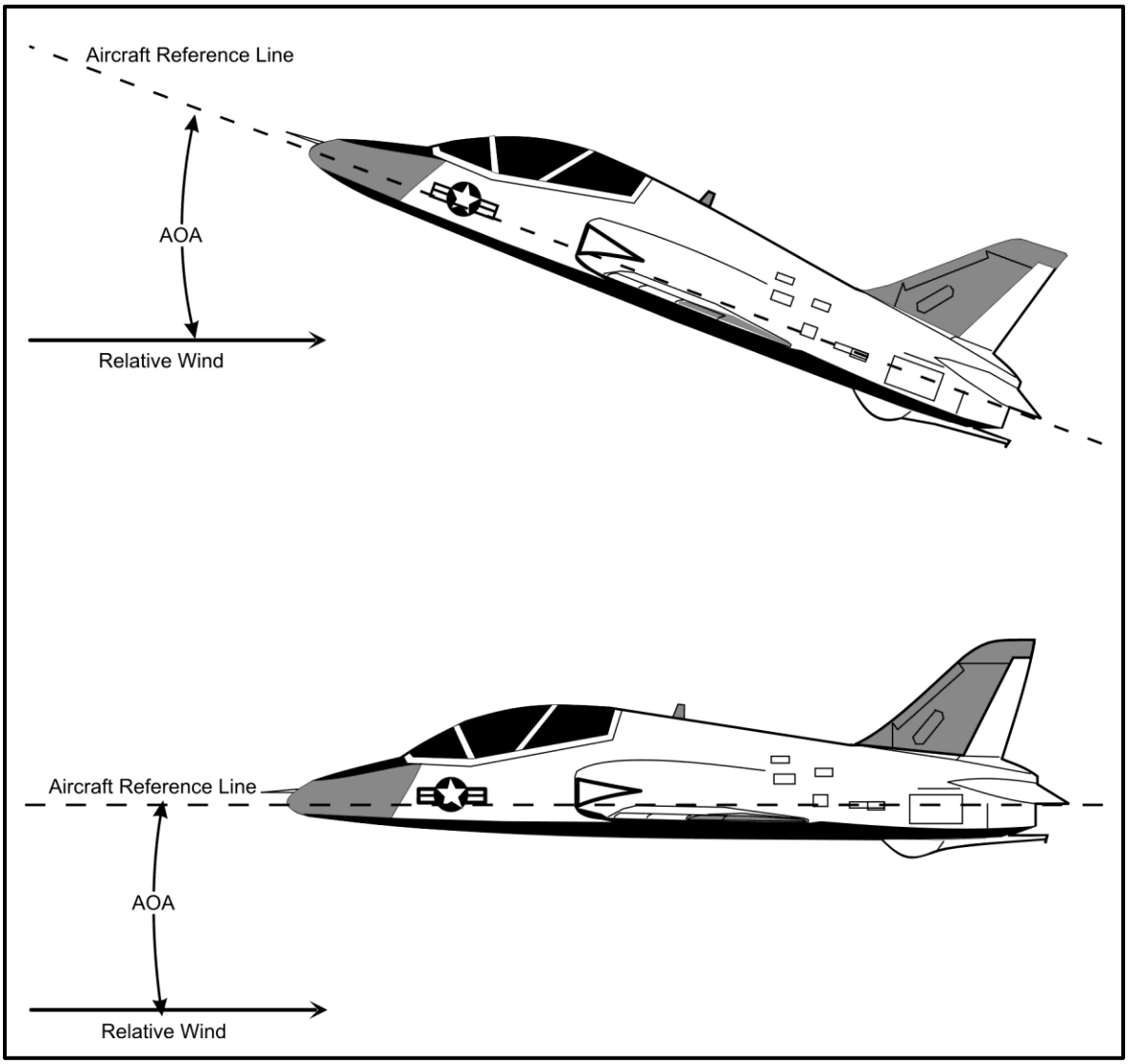

Figure 2-1 Aircraft Angle of Attack

YAW ANGLE (ψ)

Yaw Angle is the measure of displacement of an aircraft's centerline from some reference azimuth. This term is normally used in wind tunnel tests and is presented here only to minimize or eliminate the tendency to confuse it with yaw rate or angle of sideslip (Figure 2-2).

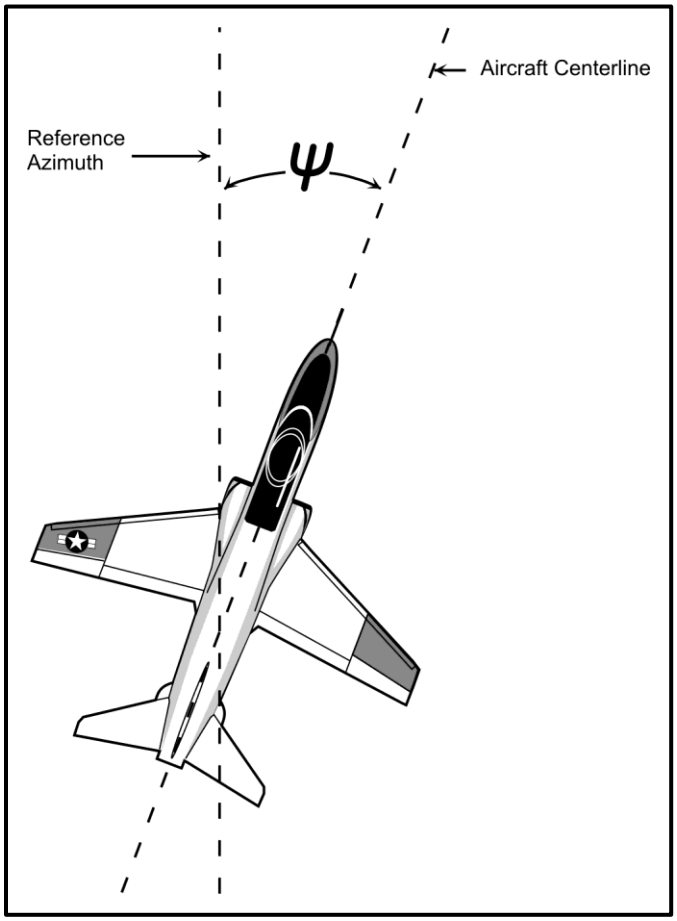

Figure 2-2 Yaw Angle

YAW RATE

The rate of change of yaw angle *(ψ)*, manifested as how fast the nose of the aircraft is moving across the horizon. Yaw rate is measured in degrees/second.

SIDESLIP ANGLE (β)

Sideslip Angle is the displacement of the aircraft centerline from the relative wind, rather than from a reference axis. (Figure 2-3).

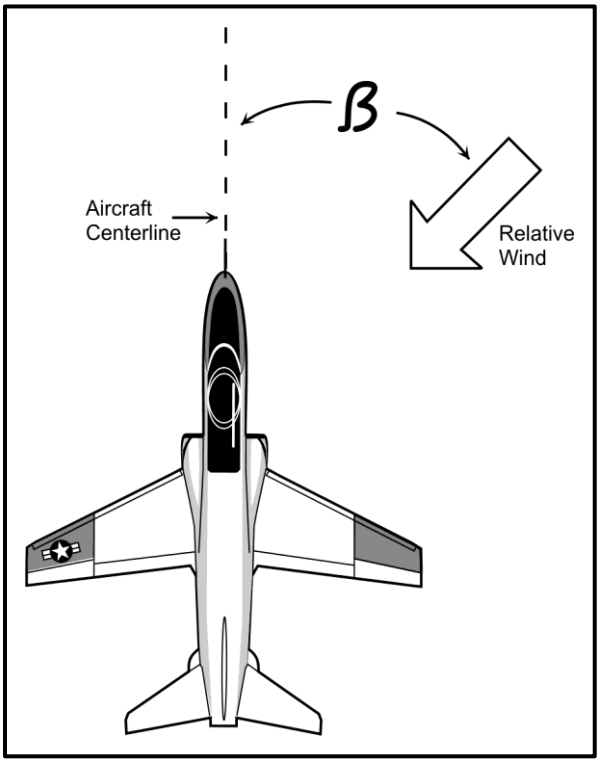

Figure 2-3 Sideslip Angle

STATIC DIRECTIONAL STABILITY

Static Directional Stability is the tendency of the aircraft to return to steady-state flight after a disturbance in the horizontal plane. Directional stability can be positive, neutral, or negative. The three types of directional stability are illustrated in Figure 2-4.

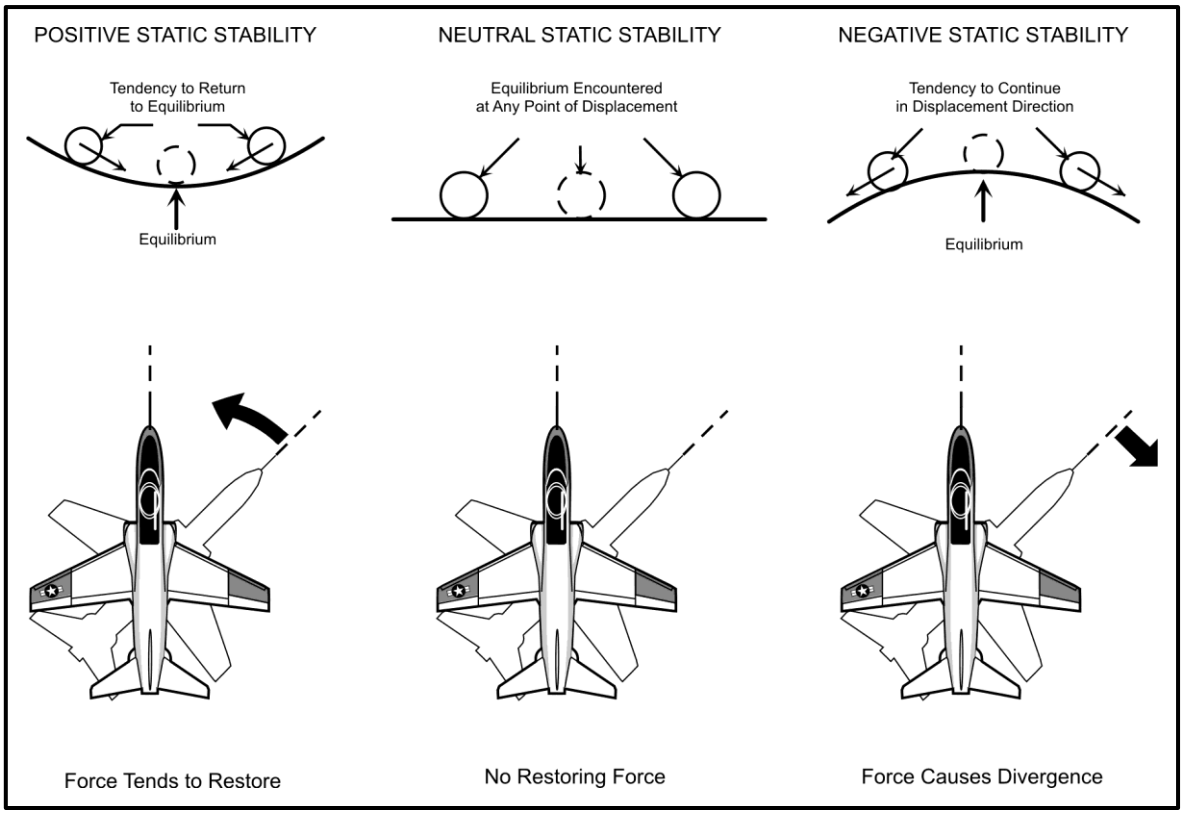

Figure 2-4 Directional Stability States

BODY AXIS SYSTEM

Body Axis references those points about which an aircraft will rotate (Figure 2-5).

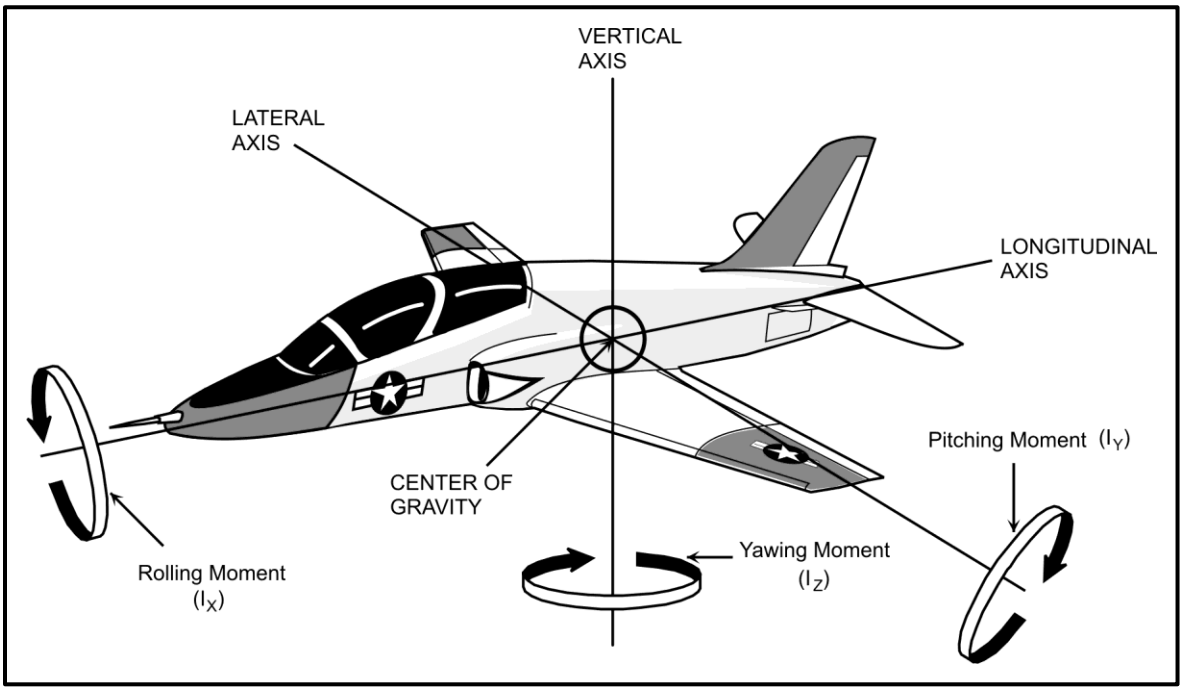

Figure 2-5 Body Axis System

MOMENT OF INERTIA (I)

With respect to any given axis, the moment of inertia is a measure of the resistance of a body to angular acceleration**.** I_x, I_y, I_z are moments of inertia about the respective body axes (Figure 2-5).

201. EFFECTS OF MASS DISTRIBUTION

Mass distribution defines the way in which the mass of an aircraft is distributed between the fuselage and the wings. Because aircraft are "flattened" into the XY plane, the maximum moment of inertia is invariably around the yaw, or Z, axis (I_z). Depending on the aircraft's mass distribution, I_x is greater or less than I_y, as illustrated in Figure 2-6. Mass distribution is usually expressed in terms of the inertia yawing moment parameter (IYMP):

$$IYMP = \frac{I_x - I_y}{Mb^2}$$

Where: I_x and I_y = Moments of inertia around the indicated axis

M = Mass of the aircraft

b = Wingspan

If roll inertia **(l_x)** is greater than pitch inertia **(I_y)**, then the aircraft has a positive IYMP and is said to be wing-loaded. If the pitch inertia is greater than the roll inertia, then IYMP is negative and the aircraft is said to be fuselage-loaded. Most current tactical aircraft are fuselage-loaded, even with ordnance on the wing stations.

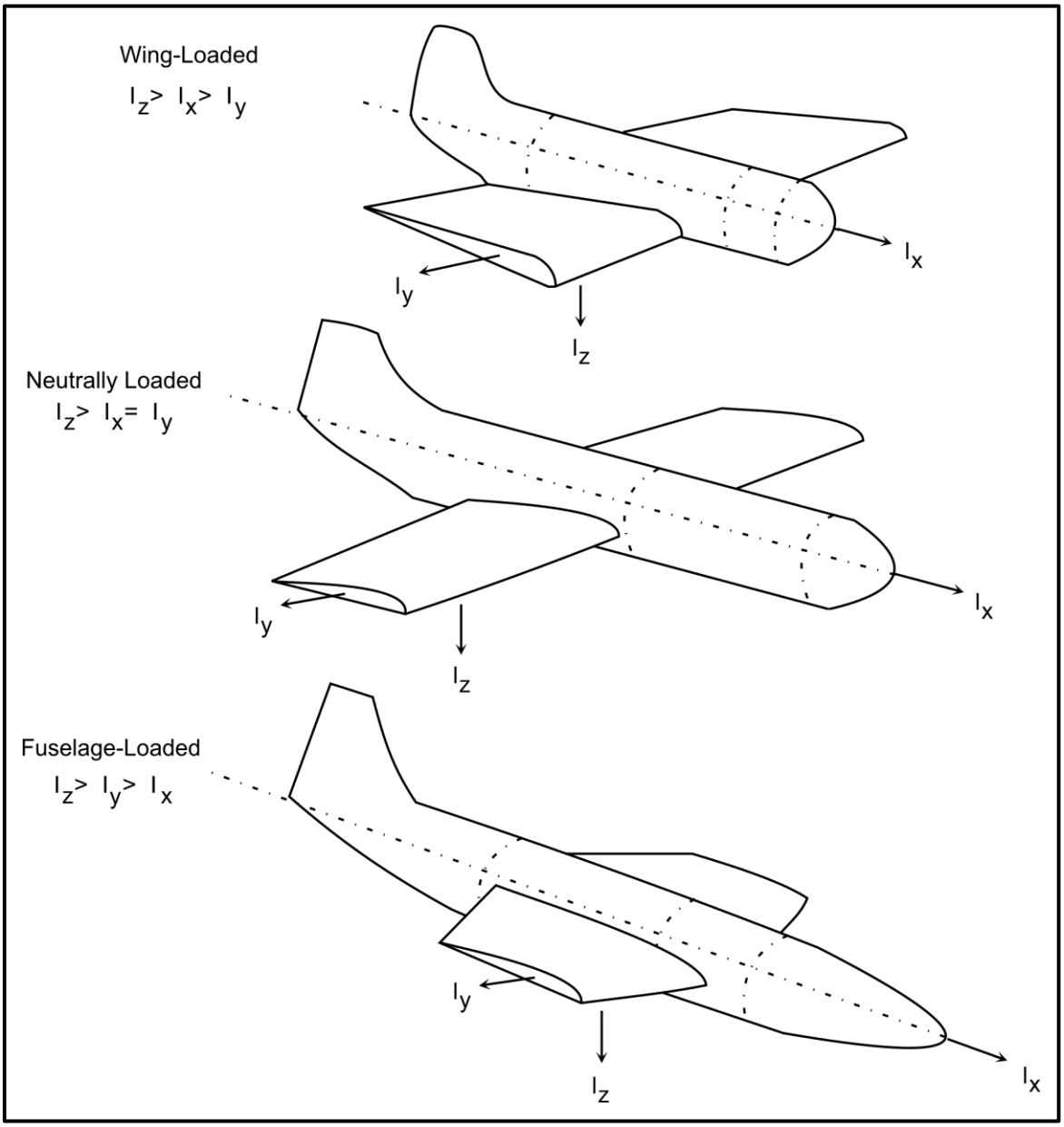

Figure 2-6 Effects of Mass Distribution

An aircraft that has a large negative IYMP will tend to spin in a flatter nose attitude than an aircraft that is neutrally loaded or wing-loaded. The inertial moments on the spinning aircraft will pull the nose toward the horizon (Figure 2-7). As you will see later, the mass distribution will also significantly affect spin recovery requirements.

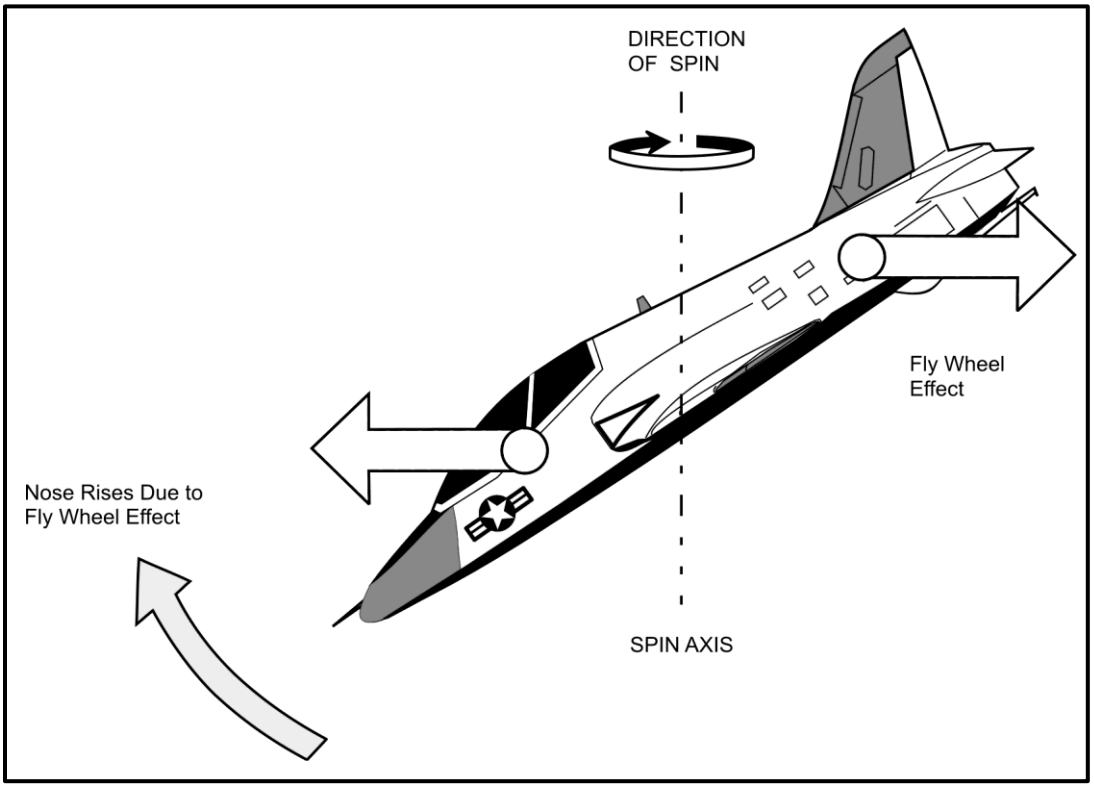

Figure 2-7 Pitchup Due to Inertial Coupling

202. FIVE PHASES OF OUT-OF-CONTROL FLIGHT

1. Stall
2. Departure
3. Post-Departure Gyrations
4. Incipient Phase of a Spin
5. Steady-State Spin

STALL

Stall occurs when an increase in AOA produces a reduction in the coefficient of lift and an increase in drag. An aircraft's wing stalls when the boundary layer separates from the upper surface of the wing. Figure 2-8 represents some of the T-45 key stall AOAs in relation to airspeed before the stall.

	ARTIFICIAL STALL WARNING	STALL BUFFET	STALL
CLEAN	21.5 Units / 10 KIAS	25 Units / 1 to 2 KIAS	26 Units / 0 KIAS
APPROACH	21.5 Units / 10 KIAS	28 Units / 1 KIAS	29 - 30 Units / 0 KIAS

NOTE: ***All Speeds are KIAS above Stall Speed***

Figure 2-8 T-45 Key Stall AOAs

DEPARTURE

Departure from controlled flight is that phase of flight during which the aircraft transitions from controlled to uncontrolled flight (Figure 2-9), the moment in time when normal control inputs stop working or when airspeed is <85 KIAS.

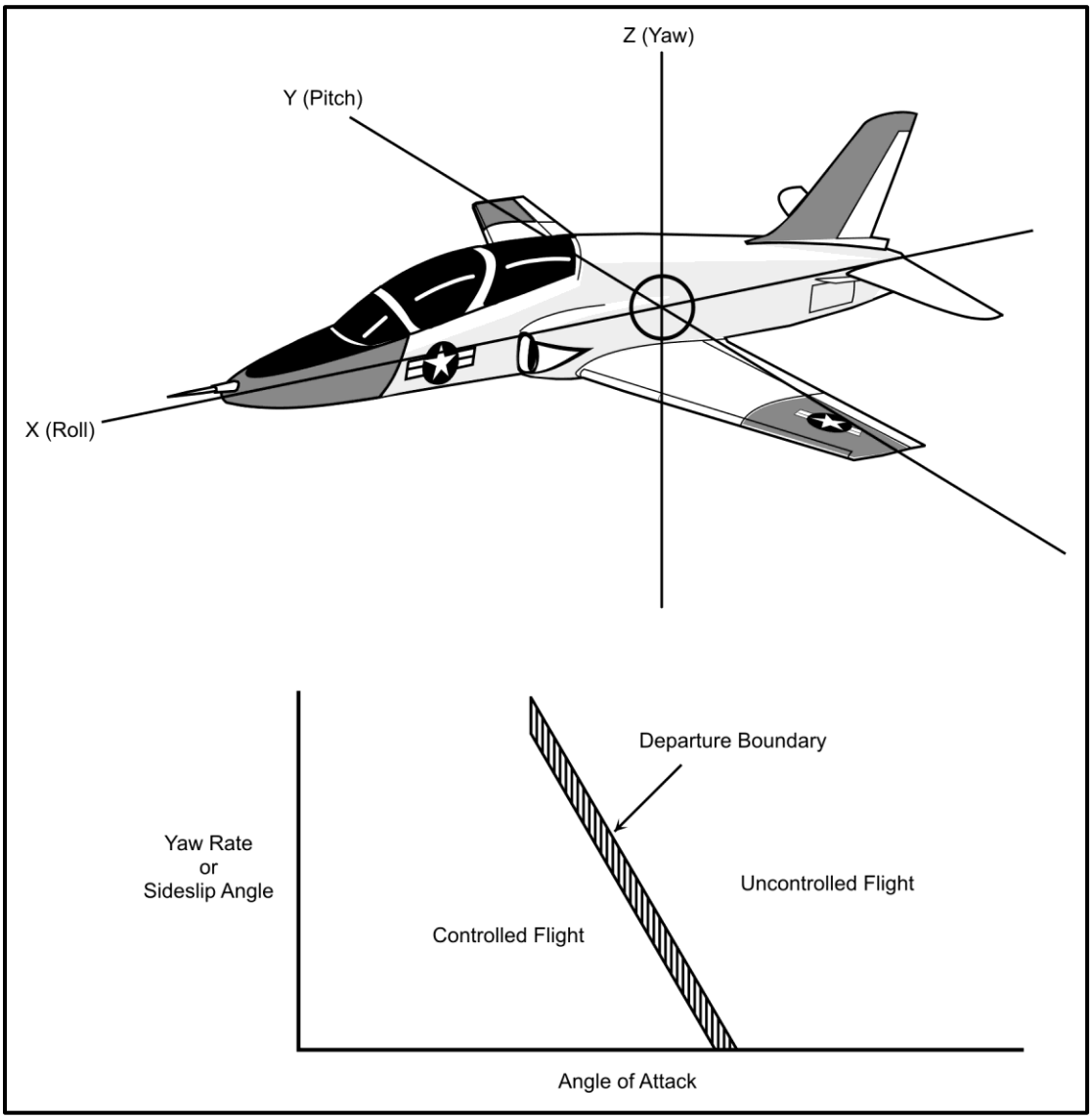

Figure 2-9 Departure Boundary

NOTE

CNATRA defines ***departure*** as any time the aircraft rolls uncommanded through 90 degrees AOB following a stall.

You must realize that the AOA you see just prior to departure will vary significantly depending on the maneuver you're performing, i.e., how much yaw rate or sideslip you're generating. The higher the yaw rate or sideslip, the lower the cockpit AOA at departure.

POST-DEPARTURE GYRATIONS (PDGs)

Post-Departure Gyrations are the random and uncontrollable motions of the aircraft about any or all axes following a departure from controlled flight, but before the incipient phase of a spin. In a PDG, much of the motion can be attributed to inertial forces and moments. Bottom line, during PDGs the aircraft is depleting its stored energy to the point where a spin can develop.

INCIPIENT PHASE OF A SPIN

The Incipient Phase of a spin is the initial, transitory phase of spin, characterized by yawing, rolling, and pitching motions during which it is possible to begin to identify the spin mode. This phase includes the beginning of rotational motion of the aircraft following a stall, but is prior to the equalization of aerodynamic and inertial forces resulting in steady-state spin or recovery. Motion is characterized by:

1. Stalled AOA throughout

2. Rotation in the direction of the spin

3. Varying roll, yaw, and pitch rates

4. Average rotation rate usually slower than steady state

STEADY-STATE SPIN

Steady-State Spin is the final phase of a spin, characterized by a sustained yaw rotation and a stalled AOA. Aircraft motions from turn to turn are repeatable and consist of a yawing, rolling, and pitching helical motion in which the aerodynamic and inertial moments or forces are in balance. It is characterized by autorotation. That is, the aircraft will continue to spin without pro-spin controls; the spin is self-sustaining.

203. OUT-OF-CONTROL RECOGNITION

Out-of-control flight (departure from controlled flight) is comprised of two elements, aerodynamic stall and yaw. Generally, impending departure from controlled flight is indicated by one or more of the following symptoms:

1. Mushy flight controls

2. Unresponsiveness to control inputs

3. Buffeting and buffet noise

4. Wing walk

The following are fairly unmistakable indications that you have entered uncontrolled flight:

1. Excessive yaw rate

2. Spinning or tumbling

3. Decaying airspeed and uncontrollable altitude loss

Loss of control of an aircraft can be a confusing and disorienting experience. If you are to recover, you must make a rapid analysis of the specific phase of out-of-control flight. Visual and "seat of the pants" cues are insufficient for you to differentiate between departure, post-departure gyration, incipient phase of a spin, or steady-state spin.

Even the seemingly obvious determination of whether the aircraft is in an erect or inverted mode may not be possible through sensory cues. In an erect spin, the aircraft may spin in a relatively nose-down attitude with a high-G roll rate, or it may spin in a flat attitude with a high yaw rate and very little roll rate. In a steady-state spin, the flight path is vertical, i.e., straight down. The axis of the spin, or the center of the spin rotation, is also straight down.

In a steep nose-down attitude, the axis of rotation lies forward, and in some extreme cases the axis may be forward of the entire aircraft. As the nose rises to a flatter attitude, the axis of rotation moves aft. If it moves behind the cockpit, and if a high yaw rate is present, you will experience high transverse-G (eyeballs out) forces (Figure 2-10). There is a possibility that you will interpret these transverse-G forces as negative-G. The problem is further compounded when roll, pitch, and yaw oscillations vary in the direction and magnitude of G forces and literally tumble you about the cockpit.

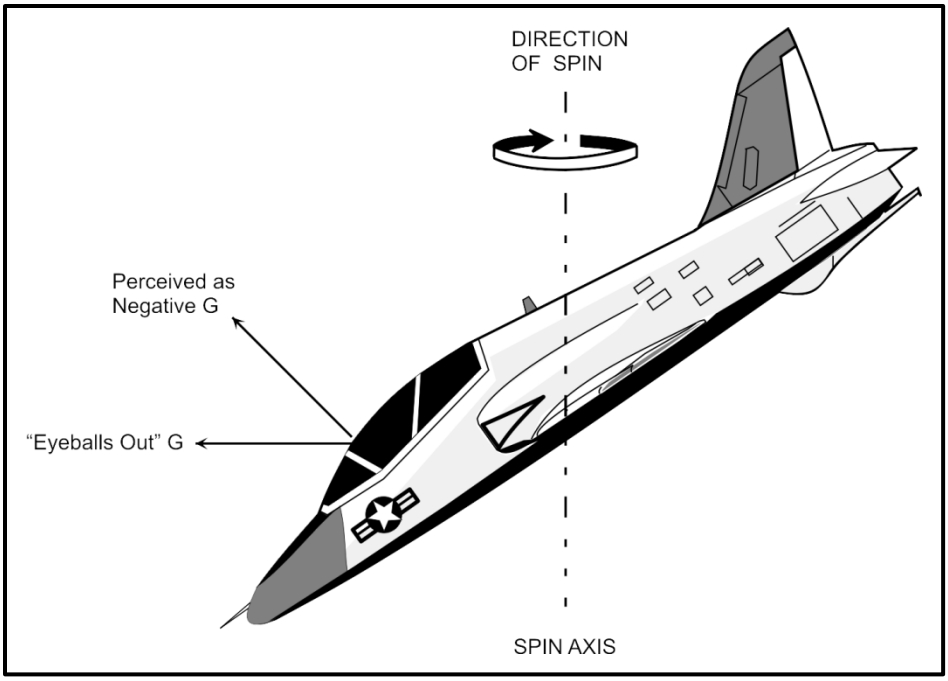

Figure 2-10 G Forces with Spin Aft of Cockpit

Since you can't rely on outside visual and sensory cues to determine the mode of flight, you must ignore your intuitive responses. ***The only satisfactory means of analyzing the situation, and thereby properly recovering from out-of-control flight, is by referencing instruments***.

204. INSTRUMENT INDICATIONS

Four instruments provide us information for out-of-control flight. The first is for obvious safety considerations, while the other three provide us all the information necessary for recognition and recovery:

1. Altimeter

2. AOA indicator

3. Airspeed indicator

4. Turn needle

Altimeter

You must reference the altimeter to determine how much time is available for recovery. ***If you have not seen indications of recovery by 10,000 feet AGL, EJECT***.

AOA Indicator

AOA primarily determines post-departure gyration, whether the spin mode is upright or inverted, and spin recovery.

Airspeed Indicator

The airspeed in a steady-state spin will be stable or oscillating about a constant airspeed. An airspeed above or below a characteristic range for the type of aircraft, or a steadily increasing airspeed, indicates that the aircraft ***is not*** in a steady-state spin.

Turn Needle

The turn needle will be fully pegged in the direction of the spin. It does not provide other information about the phase of flight; the needle may also be fully pegged during a post-departure gyration or a high-speed spiral, for example. The turn needle, however, must be relied on to indicate the direction of the rotation since you can misinterpret visual cues during the extreme disorientation that often accompanies out-of-control flight.

205. THE ERECT OR UPRIGHT SPIN

The motion of an aircraft in a spin can involve many complex aerodynamic and inertial moments and forces, and there are certain fundamental relationships regarding spins with which you must be familiar. The two primary factors which must be present for an aircraft to spin are:

1. Stalled AOA

2. Sideslip or yaw rate

Figure 2-11 illustrates the rotational velocities experienced by an aircraft in a spin. Notice that the increased AOA on the down-going wing produces decreased lift and increased drag relative to the up-going wing. Remember, up-going and down-going are in the context of rolling moments which are in relation to the longitudinal axis of the aircraft, not the surface of the planet. The increased drag on the down-going wing perpetuates yaw of the spin while the decreased lift on the down-going wing perpetuates the roll of the spin. With sustained yaw and roll rate, the aircraft is on its way to a steady-state spin in which there is no overall increase in spin velocity. It is true that velocity may increase and decrease in an oscillatory spin, but these oscillations are cyclical.

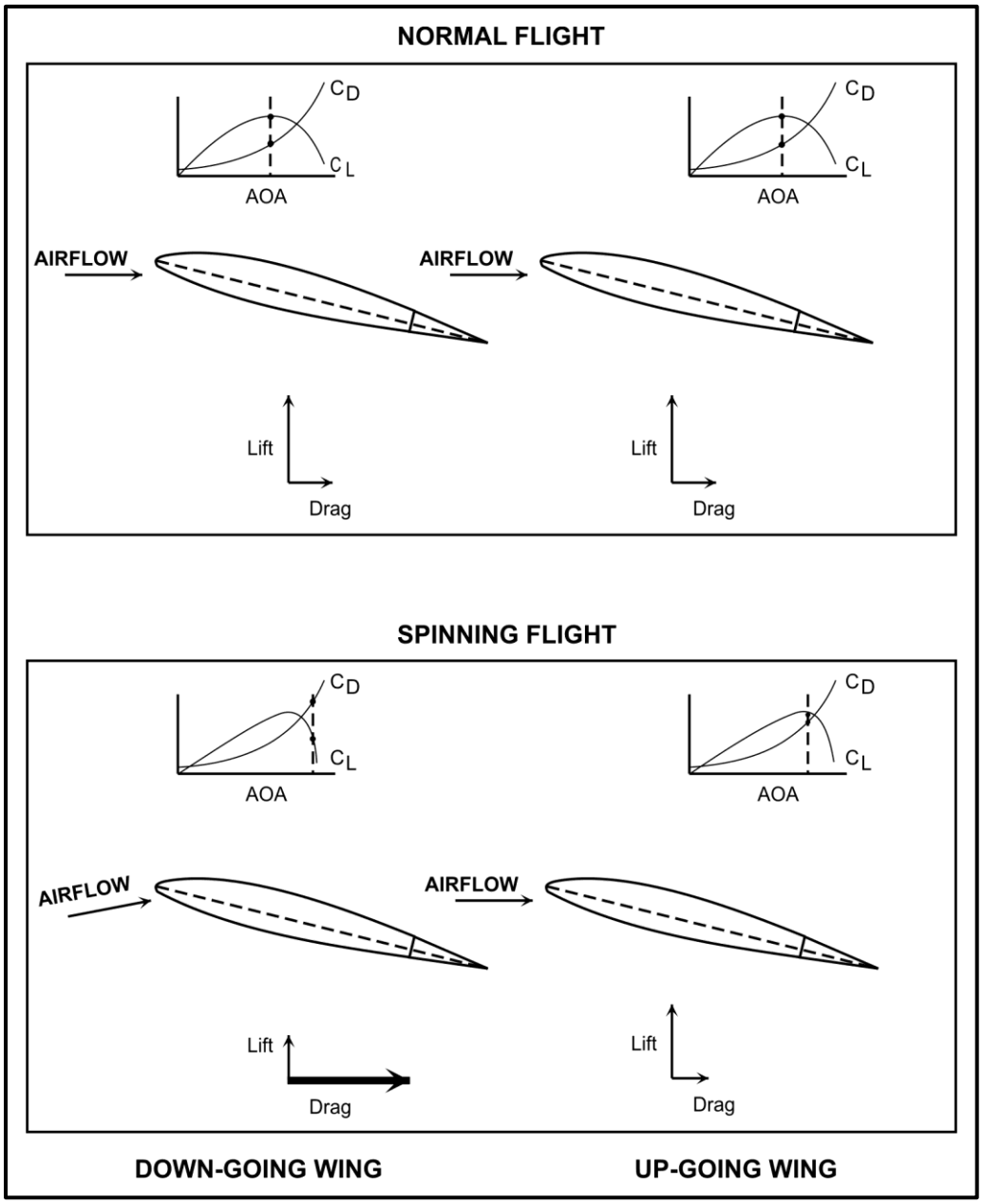

Figure 2-11 Aerodynamics of a Spin

A familiar analogy is a falling leaf. The leaf spins to the ground in a balanced autorotation: aerodynamic forces are acting on the leaf in concert to produce a regular spin motion.

Figure 2-12 illustrates how these differential aerodynamic forces cause autorotation. In a spin, the aircraft is rolling and yawing at some AOA above stall. In an upright spin, the aircraft rolls and yaws in the same direction; in an inverted spin, the aircraft rolls and yaws in opposite directions. The up-going wing will experience a decrease in angle of attack with an increase in lift and decrease in drag relative to the down-going wing. Therefore, the up-going wing will become less stalled. The resulting autorotation rolling moments and yawing moments start the aircraft into a steady-state spin. For this reason, roll damping (resistance to roll) is negative at angles of attack above stall; the rolling motion produces a rolling moment in the direction of the roll. This negative damping is referred to as autorotation. Figure 2-12 shows a graphic depiction of roll and yaw autorotation.

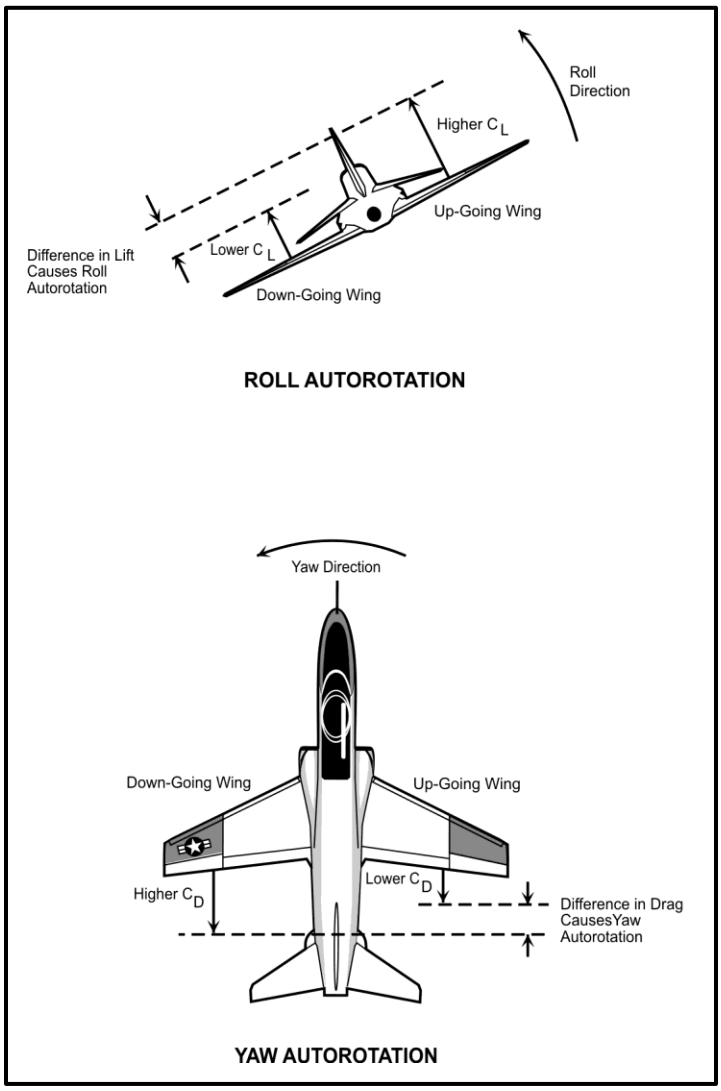

Figure 2-12 Autorotation in T-45 Aircraft

So far, these characteristics are shared by both conventional and high-speed aircraft configurations. An important characteristic true only of the conventional aircraft configuration is that the spin is primarily rolling with a moderate yaw rate.

The modern high-speed aircraft configuration (F/A-18) is typified by a low-aspect ratio and a swept-wing planform with relatively large yaw and pitch inertia. Figure 2-13 illustrates the aerodynamic characteristics of this configuration.

The lift curve in Figure 2-13 is quite shallow at high angles of attack, and maximum lift is not clearly defined. When this type of aircraft rolls at high angles of attack, relatively small changes in the lift coefficient take place. The adverse yaw due to roll can be very strong prior to stall. When this effect is combined with low roll inertia, it is apparent that the roll moments will be relatively weak and will not predominate. The drag curve, on the other hand, is increasingly steeper with increasing AOA. Thus, the relatively large differential in drag with rolling motion creates a predominance of yaw in the spin.

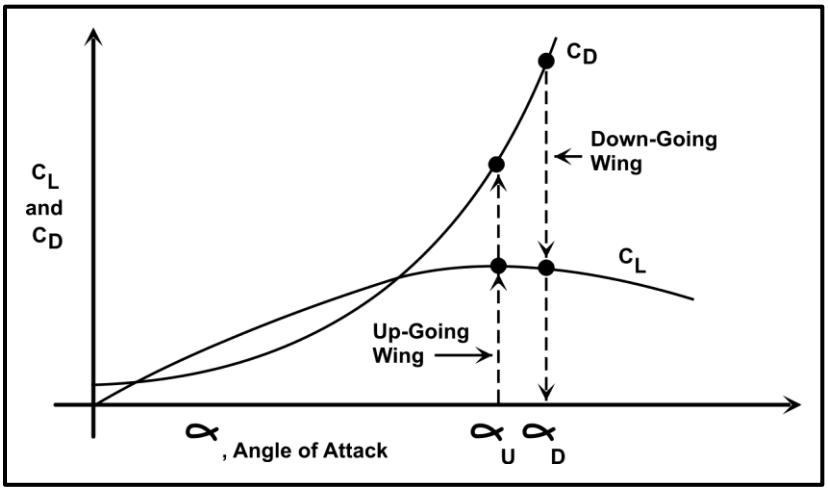

Figure 2-13 Aerodynamics of High-Speed Aircraft

In addition, aircraft with relatively large, long fuselages (F-14) exhibit a significant moment from the fuselage which acts to flatten out the spin. This moment is capable of producing pro-spin moments of considerable magnitude, which contribute to the self-sustaining nature of the spin. The large distributed mass of the fuselage in rolling-yawing rotation contributes to inertia moments which flatten the spin and place the aircraft at extreme (80-90°) angles of attack.

206. INVERTED SPINS

Inverted spins are an interesting and spectacular realm of flight; they are also a realm with which most pilots are unfamiliar. Aerodynamically, the inverted spin is quite similar to the erect spin. The conditions required to enter an inverted spin are:

1. Negative stalled AOA

2. Sideslip or yaw

The inverted spin, although not frequently encountered, can be extremely disorienting. A primary reason for the disorientation, in addition to the negative load factors, is that yaw and roll are in opposite directions. Because pilots are more sensitive to roll than to yaw, a pronounced tendency exists for you to analyze the spin in the direction of the roll, instead of in the direction of the yaw.

207. RECOVERY

ANALYZE SITUATION

The proper recovery depends upon an accurate analysis of the situation. Faulty analysis and subsequent application of improper control inputs can result in a worsening situation and loss of the aircraft. In order for the aircraft to achieve a steady-state spin, it must progress through all five phases of out-of-control flight:

1. Stall: AOA above stall

2. Departure: Loss of aerodynamic control

3. Post-departure gyration: AOA, turn needle, and airspeed oscillating

4. Incipient phase of a spin: AOA and turn needle pegged, airspeed oscillating

5. Steady-state spin: AOA and turn needle pegged; airspeed steady or oscillating slightly

Figure 2-14 presents an overview of the OCF progression and recovery inputs used during the various phases. It also depicts the recovery evolution, which happens in the exact opposite order of events. For example, if a steady-state spin develops you must use anti-spin controls to bring you back into the incipient phase of a spin, then to post-departure gyrations, and so on until full recovery occurs.

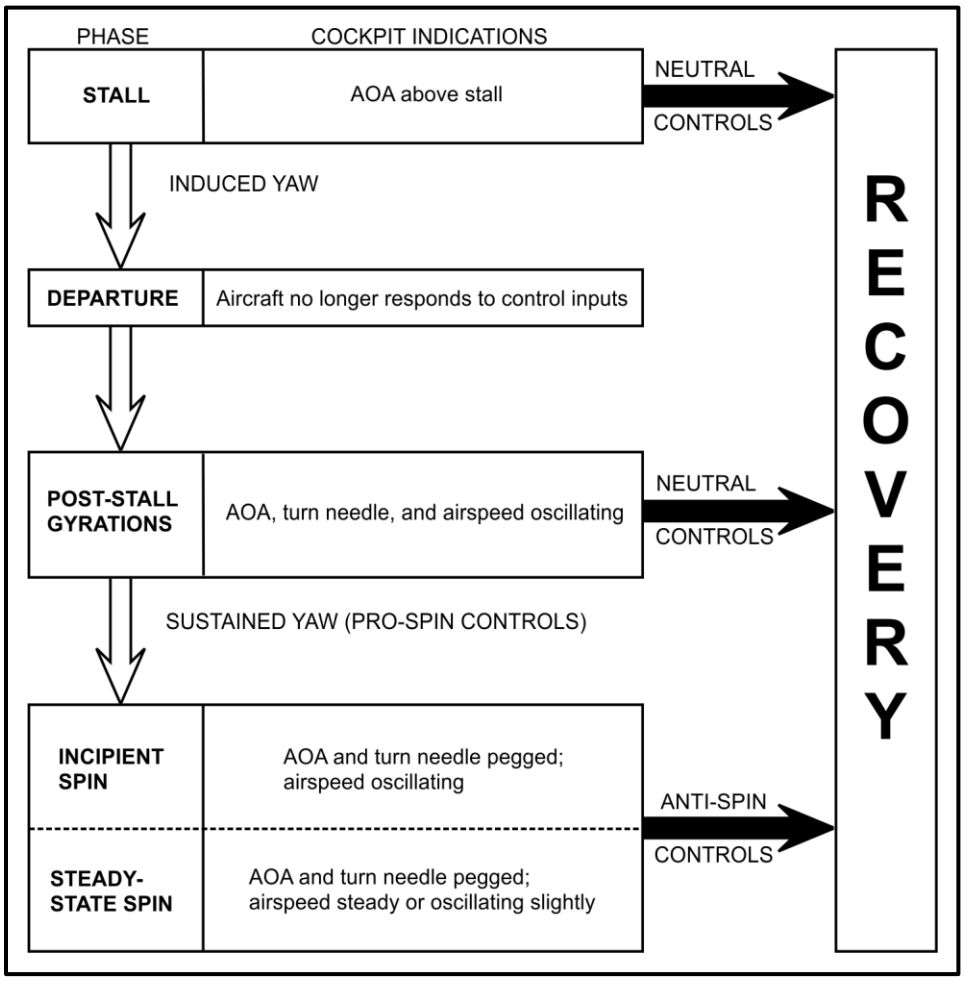

Figure 2-14 T-45 Out-of-Control Flight and Recovery Sequences

208. RECOVERY FROM STEADY-STATE SPINS

To recover the aircraft from a spin, you need to do two things:

1. Reduce the yaw rate

2. Reduce the angle of attack

Reducing the yaw rate involves a number of factors. Principal among these factors are mass distribution, which is by far the most important single factor, and tail design. You can usually use these two engineering characteristics to predict the controls required for recovery and whether the aircraft has satisfactory recovery capabilities.

As explained earlier, mass distribution significantly affects the spin characteristics of an aircraft. A fuselage-loaded aircraft will spin in a flatter attitude, with yaw much more predominant than roll. In these aircraft, rudder authority may not be sufficient to reduce the yaw rate enough to affect recovery and usually requires a lateral stick input.

Tail design, or the position of the horizontal stabilizer, may disrupt airflow across the rudder and decrease rudder effectiveness in a spin. Figure 2-15 shows examples of the effect that tail design has on rudder effectiveness.

A parameter used to describe tail design is the tail damping power factor (TDPF), which is a measure of the damping provided by the unshielded part of the rudder. Generally speaking, the higher the TDPF, the more likely it is that the rudder will be an effective recovery control surface.

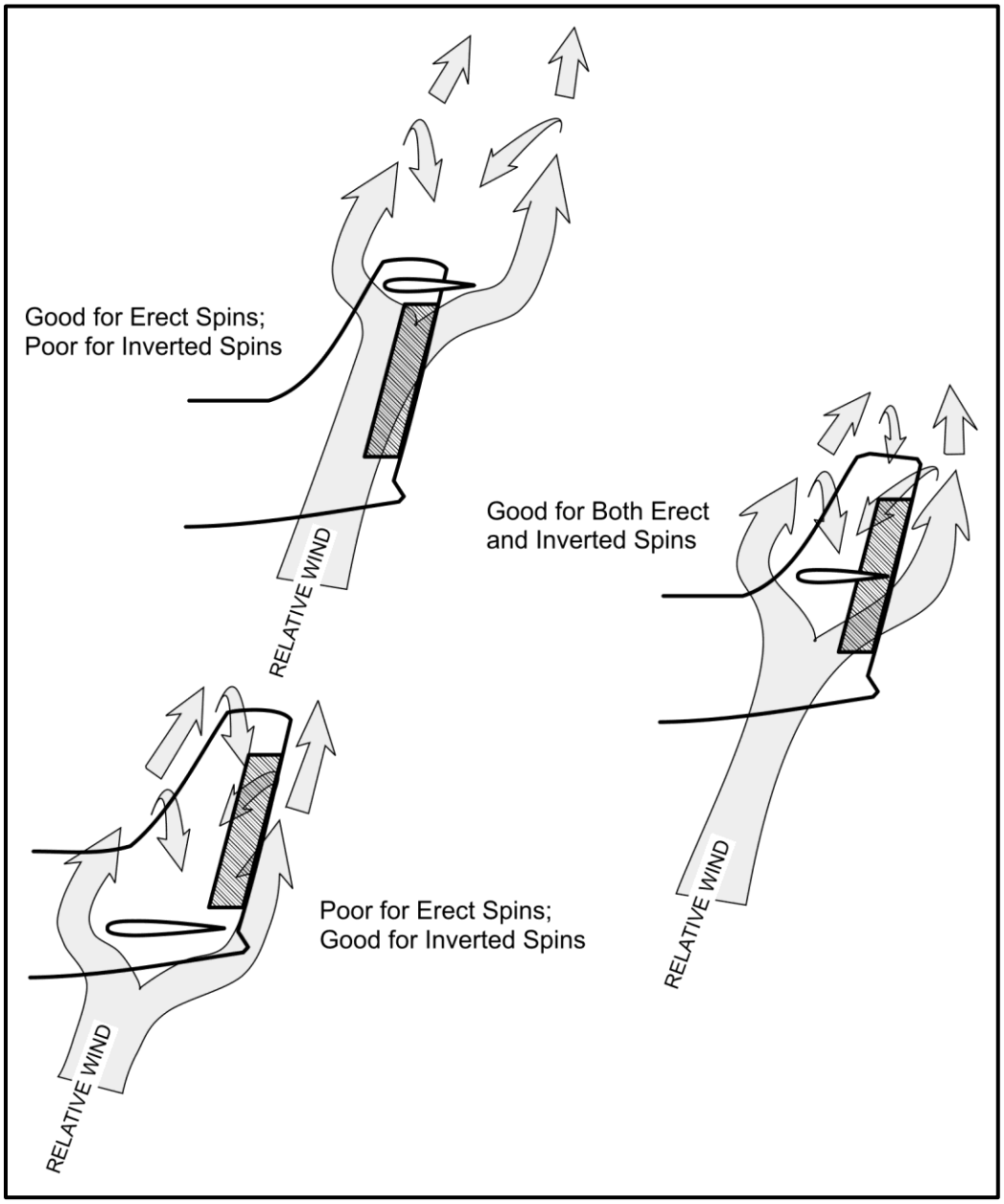

Figure 2-15 Tail Design

A third factor which affects spin recovery is the aircraft relative density factor **(μ)**, which is given by the following equation:

$$\mu = \frac{\text{Aircraft Density}}{\text{Air Density}} = \frac{M/Sb}{p}$$

Heavily loaded tactical aircraft have density factors as high as 100. Light civilian aircraft have density factors around 25.

The combination of these factors determines the control requirements necessary to reduce the yaw rate. A neutrally loaded or slightly fuselage-loaded aircraft with a good tail design (such as the T-2) recovers easily with rudder opposite to the direction of spin. A high performance aircraft (such as the F-14 and F-18) does not possess enough rudder effectiveness to reduce yaw rate, and you must provide additional anti-spin moments for rapid recovery. Deflecting ailerons reduces the autorotation rolling moment and produces adverse yaw to aid the rudder yawing moment in effecting recovery.

The second requirement for recovery is to reduce your AOA. In most aircraft, neutral elevator will ensure a reduced AOA once you reduce the yaw rate. In some aircraft, however, you must use forward or aft stick during the initial phase of recovery to increase the effectiveness of the rudder. Figure 2-16 depicts the erect spin recovery controls for several aircraft.

	F-18 AV-8 A-4 T-45	F-14 T-38	EA-6	T-2	T-34
Rudder	Against	Against	Against	Against	Against
Aileron	With	With	Neutral	Neutral	Neutral
Elevator	Neutral	Fwd or Aft	Aft	Neutral	Forward
	FUSELAGE-LOADED		WING-LOADED		

Figure 2-16 Erect Spin Recovery Controls

209. PROGRESSIVE SPINS

A progressive spin occurs when an aircraft enters a second spin immediately following initial recovery from a spin, with the direction of the rotation normally opposite to that of the original spin. A progressive spin may result from holding in anti-spin inputs after rotation stops, holding in aft stick during recovery, or initiating recovery pullout with insufficient airspeed or excessive AOA. The reversal in the rotation may be quite violent, and the spin may tend to be more nose-low with faster rotation than the initial spin. In all cases, maintain neutral controls, reference

altitude/AOA/airspeed/turn needle, and after ascertaining the flight mode, execute the appropriate recovery procedures.

210. HIGH-SPEED SPIRALS

You may confuse a high-speed spiral with a spin if you don't properly analyze the flight instruments; however, when you reference the instruments, you will immediately recognize that you are not in a spin.

The high-speed spiral is characterized by a nose-low attitude, high roll rates, and minor yaw rates. The AOA may be above stall, but not pegged; the airspeed will generally be increasing above the normal spin airspeeds. The turn needle is fully deflected in the direction of roll and yaw. Because of the high airspeeds that may be encountered, the altitude loss may exceed the altitude loss in a steady-state spin.

211. PILOT FACTORS IN OUT-OF-CONTROL FLIGHT

Now that we have discussed out-of-control aerodynamics and aircraft design factors, we will discuss several factors affecting your performance when the aircraft departs controlled flight.

TIME DISTORTION

Studies have shown that the average pilot under the stresses of out-of-control flight perceives time to be passing about five times faster than it really is. This leads to reluctance to maintain the proper recovery controls long enough. The pilot feels that the controls have been held for a long time, and that recovery should have taken place; therefore, it must be time to "try something else" and recovery is consequently prevented. The only sure way to avoid the problems brought about by time distortion is to analyze the problem accurately, know the aircraft's recovery procedures, maintain the recovery controls, and be patient. If, on the other hand, you haven't recovered by 10,000 feet AGL, EJECT.

G-FORCE DISTORTION

As discussed earlier, G-force distortion, or unreliable "seat of the pants" cues, can cause you to misunderstand the situation and apply improper recovery controls. You must make a conscious effort to disregard the perceived G forces and trust the indications of the instruments.

CONTROL INPUTS

Your initial reaction to an out-of-control situation will frequently be contrary to the necessary control application, primarily in the use of the lateral controls. For example, upon experiencing a wing drop or roll during a departure, your instinct is to counter with ailerons, which induces adverse yaw, aggravates the departure, and can lead to a spin. In those aircraft that require aileron in the direction of the spin to recover, it may feel very unnatural to do so. You must position all controls deliberately, and to ensure that they are properly placed, you must visually check all controls for correct position.

SEAT RESTRAINT

OCF may cause you to be thrown out of reach of the controls. Keeping the lap belts as tight as possible will help prevent this problem. Under heavy negative G loads or high transverse G, reaching the controls will take a definite effort even if the lap belts are tight.

NOTE

If completely disoriented and unable to recognize any phase of the OCF encounter,

NEUTRALIZE - IDLE.

They are the two most important procedures to remember.

NOTES

CHAPTER THREE
T-45 OUT-OF-CONTROL FLIGHT CHARACTERISTICS

300. T-45 STALL CHARACTERISTICS

In the T-45, impending stall is announced by light buffeting which increases in intensity as you approach stall. Depending on the aircraft configuration and the rate of deceleration, the stall may be signified by a yaw, wing drop, or development of high sink rate in pronounced buffet. If the deceleration is rapid, you can penetrate the stall until the control stick is fully aft. The controls remain effective throughout, and you can terminate the stall by relaxing back stick pressure, maintaining wings level with rudder, and simultaneously advancing throttle. Check engine EGT and RPM after any stall to ensure engine is stall-free.

CLEAN CONFIGURATION STALL

With flaps/slats and gear up, idle, and without external stores, the onset of light buffet is at about 22 units AOA. If you increase the AOA beyond buffet, the aircraft will remain controllable until a wing drop occurs at about 26 units. The aircraft then descends at a high rate and in a flat attitude with wing rock and yaw oscillations.

TAKEOFF CONFIGURATION STALL

With 1/2 flaps and landing gear down, idle, and without external stores, the onset of buffet is at about 26-27 units AOA. As you approach the stall, buffet increases but the aircraft displays no tendency to yaw. The stall is usually announced by a gentle wing drop at 29-30 units AOA. You can fly the aircraft beyond stall AOA, controlling any roll activity with rudder, until the stick is fully aft.

LANDING CONFIGURATION STALL

With flaps/slats fully extended, landing gear down, idle, and without external stores, the stall characteristics are similar to those with 1/2 flaps. The pre-stall buffet begins at about 26-27 units AOA, and the stall occurs at 29-30 units AOA.

WARNING

> If you continue the stall in the landing configuration until the stick is fully aft, the aircraft may develop pitch and roll oscillations which you cannot control, and recovery is likely to result in a large altitude loss.

EMERGENCY FLAP CONFIGURATION STALL

With flaps extended and slats retracted (emergency flap extension or slat failure), the aircraft will exhibit no natural stall warning during the approach to stall. Stall warning rudder pedal shaker comes on at 21.5 units AOA, closely followed by the stall at 23-25 units AOA. Stall airspeed is

9-11 KIAS greater than landing configuration at the same gross weight. The stall is very disorienting and is characterized by a slight pitch-up of 4-5 degrees followed by an abrupt roll-off of 60-80 degrees AOB. Following roll-off, the aircraft is left in a 30-degree nose-down pitch attitude. If recovery is initiated immediately upon roll-off, altitude loss can be minimized to 700-1,000 feet.

NOTE

The centerline store (baggage container) has little effect on the stall characteristics of the T-45. Wing stores, including bar pylons, have a slightly destabilizing effect on pitch but a negligible effect on stall speeds.

ACCELERATED STALL

Accelerated stalls are defined as those stalls entered at load factors greater than 1.0 G. The amount of pre-stall buffet warning during accelerated maneuvers varies with Mach number and altitude. In general, the warning margin is greatest at about 0.60 IMN. The buffet boundary is clearly defined and provides a good warning of the stall at all attitudes. Below about 0.40 IMN, the buffet onset occurs nearly at the maximum turning performance of the aircraft. Recovery is immediate with the release of back stick pressure. The presence of wing stores increases the severity of pre-stall buffet, but the characteristics are otherwise similar to those of a clean configuration.

301. DIRECTIONAL DEPARTURES

Directional departures can be caused by excessive or abrupt rudder application at low to moderate airspeeds and are insidious because of the limited warning of the impending departure. As discussed in Chapter 1, departures occur at a lower angle of attack when sideslip is introduced. The directional departure is characterized by an abrupt pitch-up, followed by one to two snap rolls in the direction of the applied rudder. Neutralizing flight controls will facilitate immediate recovery.

WARNING

Intentional directional departures are prohibited at airspeeds greater than 160 KIAS to avoid possible overstress.

302. VERTICAL MANEUVERING AND DEPARTURES

Vertical low-airspeed departures are generally mild and will take one of two different forms. If the pitch attitude is less than 90 degrees, the aircraft will pitch abruptly forward; if over 90 degrees, the nose will fall slowly backward. In some cases, with the pitch attitude just over 90 degrees, the aircraft will slide down on its tail (tail-slide).

WARNING

During testing, approximately half of the tail-slides resulted in engine anomalies, such as engine surges, locked-in surges, or flameouts.

During flight tests, approximately 10% of the tail-slides resulted in an inverted spin. Although entering an inverted spin is unlikely even after a tail-slide, ***you should avoid maneuvering within 20 degrees of the vertical*** when less than 100 KIAS to prevent the possibility of a tail-slide.

WARNING

Intentional spins and tail-slides are prohibited.

303. POST-DEPARTURE GYRATIONS

If you hold the control inputs after the aircraft departs controlled flight, the aircraft will continue to oscillate about any or all axes in increasingly nose-low attitudes. From a 1.0-G departure, these oscillations are mild with roll in the direction of applied rudder. Post-departure gyrations resulting from accelerated stalls are similar except that initial roll rates will be higher. In either case, neutralizing the controls will facilitate rapid recovery, normally in a nose-low attitude. AOA and airspeed must be checked to determine when to start pullout.

CAUTION

Risk of engine stall increases when maneuvering at high angles of attack and/or maneuvering above heavy buffet, when the engine is accelerating from low power settings or at high power settings.

304. SPINS

GENERAL

The T-45 aircraft is highly resistant to upright and inverted spins. While upright spins have been achieved in flight tests, they are unstable and tend to oscillate out of the spin. During departure and spin testing, no upright spins were achieved with rudder pedals centered and lateral and longitudinal stick neutralized. Stabilized inverted spins are possible and have been entered from pure vertical maneuvers (tail-slides).

If you depart controlled flight, you should neutralize the controls and forcefully center the rudder pedals until you determine whether the out-of-control motion is a post-departure gyration or a spin. Analyze AOA, airspeed, and turn needle to determine the nature of the out-of-control motion. If the AOA is positive for any length of time, the aircraft is upright. If the AOA is at or fluctuating near zero, the airplane is probably inverted. If the turn needle or AOA is changing significantly, the aircraft is probably not in a spin, but is in a post-departure gyration.

Pegged AOA, airspeed oscillating between 50 and 160 KIAS, and pegged turn needle verify a fully developed spin. AOA pegged at 0 units indicates an inverted spin, while AOA above 28 units indicates an upright spin. Due to the disorienting nature of spins, particularly inverted, you must reference the turn needle to determine spin direction. Turn needle to the right indicates a right spin, while turn needle to the left indicates a left spin.

An engine anomaly will likely occur during post-departure gyrations and spins. Monitor EGT and RPM after departure/spin recovery to determine engine status. An inverted spin will likely result in either a flameout or surge regardless of power setting.

INVERTED	AIRSPEED (KIAS)	ALTITUDE LOSS (FT./TURN)	SPIN RATE (SECONDS/TURN)
-60° AOA	50 - 120	1,000	3 - 4
-40° AOA	100 - 160	1,000	3 - 4
-25° AOA	140 - 200	1,700	3 - 4

UPRIGHT	AIRSPEED (KIAS)	ALTITUDE LOSS (FT./TURN)	SPIN RATE (SECONDS/TURN)
30° AOA	INCREASE 10/TURN	1,250	6
45° AOA	100 - 110	1,000	4

Figure 3-1 T-45 Spin Modes

INVERTED SPINS

The T-45 has three inverted spin modes (Figure 3-2):

1. –60 degree true AOA spin mode
2. –40 degree true AOA spin mode
3. –25 degree true AOA spin mode

Airspeed provides the best cue for distinguishing the type of spin mode.

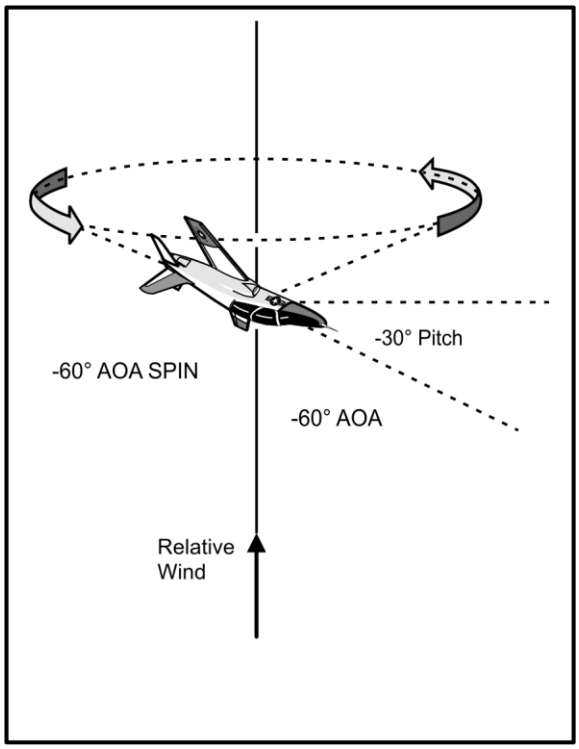

Figure 3-2 Inverted Spin

-60 DEGREE TRUE AOA SPIN MODE

The –60 degree mode is characterized by airspeed oscillating between 50 and 120 KIAS. AOA is pegged at zero. Turn needle is pegged in the direction of the spin. Altitude loss is approximately 1000 feet per turn. Rotational rates are about 80 to 100 degrees per second or 3 to 4 seconds per turn. Load factor is 0.5 to 1.4 G's. Lateral accelerations of 0.5 to 1.5 G's are common.

-40 DEGREE TRUE AOA SPIN MODE

The –40 degree mode is characterized by airspeed oscillating between 100 and 160 KIAS. AOA is pegged at zero. Turn needle is pegged in the direction of the spin. Altitude loss is approximately 1000 feet per turn. Rotational rates are about 80 to 100 degrees per second or 3 to 4 seconds per turn.

Load factor is 0.5 to 1.4 G's. Lateral accelerations of 0.5 to 1.5 G's are common.

-25 DEGREE TRUE AOA SPIN MODE

The –25 degree mode is characterized by airspeed oscillating between 140 and 200 KIAS. AOA is pegged at zero. Turn needle is pegged in the direction of the spin. Altitude loss is approximately 1700 feet per turn. Rotational rates are about 80 to 100 degrees per second or 3 to 4 seconds per turn. Load factor is 0.5 to 1.4 G's. Lateral accelerations of 0.5 to 1.5 G's are common. This mode is similar to an inverted diving spiral. The nose attitude is about 60 degrees below the horizon with about –15 to –25 true AOA.

NOTE

The –25 degree AOA mode can only be achieved with anti-spin controls held in above 160 KIAS.

RECOVERY FROM AN INVERTED SPIN

Recovery from the –60 or -40 negative AOA inverted spin modes (airspeed below 160 KIAS) can be accomplished by applying full rudder pedal and full lateral stick opposite the turn needle. Longitudinal stick should be neutral. Holding in rudder opposite the turn needle is often difficult due to high sideslip forces on the rudder. Once anti-spin controls have been applied, airspeed should be monitored carefully.

NOTE

Lateral stick deflection, which is anti-spin for the –40 and –60 modes, is pro-spin for the –25 mode.

Lateral stick must be neutralized when airspeed increases past 160 KIAS or when the aircraft recovers, whichever occurs first.

Failure to neutralize lateral stick with airspeed increasing past 160 KIAS may result in entry into the –25 degree true AOA spin mode and delay recovery.

Once lateral stick has been neutralized, the AOA indicator should be monitored for indications of recovery for rudder pedal release. AOA increasing above 5 units AOA and yaw and rolling motions damping out are positive recovery indications.

WARNING

Releasing pedal force prior to recovery may allow rudder blow out in the pro-spin direction and significantly delay recovery to below 10,000 feet.

Occasionally the aircraft transitions into a PDG when controls are neutralized, instead of immediately recovering, but subsequently recovers. If rudder is allowed to blow out during the PDG, the aircraft may return to the spin. In the event the aircraft does not recover and airspeed drops below 160 KIAS for any length of time, the pilot should reapply anti-spin controls, altitude permitting.

WARNING

Extended speed brakes are destabilizing and may aggravate the departure and delay recovery. If the rudder blows out due to sideslip forces, a spin is possible and recovery will be delayed.

CAUTION

You should expect engine anomalies following any departure. Retarding the throttle to idle will minimize engine problems, but will not eliminate the potential for a flameout or locked-in surge.

305. ERECT OR UPRIGHT SPINS

Though unstable and transitory in nature, two upright spin modes exist in the T-45 (Figure 3-3).

1. 30 degree true AOA spin mode

2. 45 degree true AOA spin mode

30-DEGREE TRUE AOA SPIN MODE

The 30-degree mode is characterized by AOA above 28 units, nose low, and airspeed 150 KIAS or greater increasing 10 KIAS per turn, stabilizing at about 180 KIAS. Turn needle is pegged in the direction of the spin. Altitude loss is approximately 1250 feet per turn. Average roll rate is near 60 degrees per second and yaw rate is 40 degrees per second. Spin rate is about 6 seconds per turn. The 30-degree mode is characterized as a jerky, diving spiral since the average nose position becomes lower with each turn. This mode could be described as a jerky nose-low rudder roll.

NOTE

The low-AOA (spiral) mode has mild oscillations in roll. As the oscillations build, the aircraft may transition to an inverted spin or to the 45-degree AOA upright spin.

45-DEGREE TRUE AOA SPIN MODE

The 45-degree mode is characterized by AOA at 30 units. Airspeed is fairly steady at about 100 to 110 KIAS. Turn needle is pegged in the direction of the spin. This high-AOA mode averages 4 seconds per turn and altitude loss is 1000 feet per turn. This mode begins to oscillate in roll as AOA approaches 45 degrees and the roll oscillations grow divergently. The early oscillations will most likely cause the engine to surge.

NOTE

> As oscillations build, the aircraft may gyrate out of the upright spin mode and either recover or couple down into a pitch-down departure or an inverted spin.

306. RECOVERY FROM AN UPRIGHT SPIN

Recovery from the 30- or 45-degree upright true AOA spin mode is accomplished by first neutralizing lateral and longitudinal stick and rudder, retracting speed brakes (if extended), and retarding the throttle to idle until spin mode has been determined. The aircraft will likely recover from either upright spin mode by just neutralizing controls, and normally in less than one turn. NATOPS goes on to say, if the aircraft doesn't recover from an upright spin for some unknown reason with neutral controls, use rudder opposite the turn needle and lateral stick into the turn needle. Recovery can be recognized by AOA fluctuating or decreasing as opposed to remaining at 30 units, yaw and roll rates dampening out and airspeed increasing.

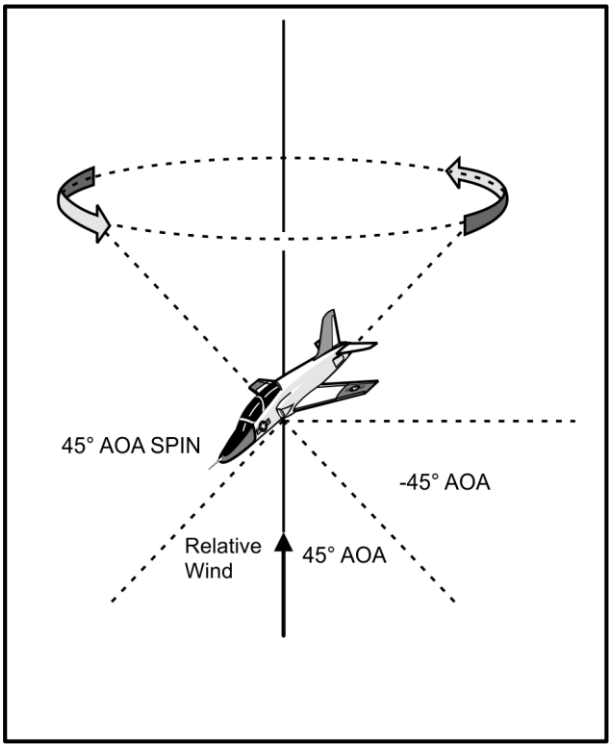

Figure 3-3 Upright Spin

WARNING

Extended speed brakes are destabilizing and may aggravate the departure and delay recovery. If the rudder blows out due to sideslip forces, a spin is possible and recovery will be delayed.

CAUTION

You should expect engine anomalies following any departure. Retarding the throttle to idle will minimize engine problems, but will not eliminate the potential for a flameout or locked-in surge.

NOTE

Test flight results indicate there is no sustained upright spin mode with neutral controls.

WARNING

NATOPS prohibits cross-control departures.

307. DEPARTURE RECOVERY PROCEDURES

Forcefully centering the rudder pedals and neutralizing the control stick, along with retarding the throttle, will usually recover the aircraft from a departure. Extended speed brakes are destabilizing and may aggravate the departure and delay recovery. If the rudder is allowed to blow out due to sideslip forces, a spin is possible and recovery will be delayed. You should expect engine anomalies following any departure. Retarding the throttle to idle will minimize engine problems but will not eliminate the potential for a flameout or locked-in engine compressor stalls.

You should check the airspeed, AOA and turn needle to monitor your recovery progress or to determine if you are in a spin. If your airspeed is oscillating between 50 and 160 KIAS, AOA is pegged at 0 units, and the turn needle is pegged, you are in an inverted spin. Although a stabilized upright spin is unlikely, it would be indicated by AOA above 28 units with similar airspeed and turn needle indications.

You should reference AOA for indications of recovery. AOA increasing through 5 units and airspeed increasing through 160 KIAS indicate inverted spin recovery. AOA fluctuating or decreasing (as opposed to remaining at 30 units), a dampening of yaw and roll rates, and airspeed increasing indicates recovery from an upright spin.

308. NATOPS DEPARTURE SPIN PROCEDURES

1. Controls—NEUTRALIZE / FORCIBLY CENTER RUDDER PEDALS

2. Speedbrakes – RETRACT

3. Throttle – IDLE

4. Check altitude, AOA, airspeed and turn needle

If spin confirmed –

INVERTED (AOA pegged at 0 units)

5. Rudder pedal — FULL OPPOSITE TURN NEEDLE

6. Lateral stick — FULL OPPOSITE TURN NEEDLE

7. Longitudinal stick — NEUTRALIZE

UPRIGHT (AOA above 28 units)

5. Rudder pedal — FULL OPPOSITE TURN NEEDLE

6. Lateral stick — FULL WITH TURN NEEDLE

7. Longitudinal stick — NEUTRALIZE

If recovery indicated or airspeed increasing through 160 KIAS:

8. Lateral stick — NEUTRALIZE

When recovery indicated –

9. Rudder pedals — SMOOTHLY CENTER

If out of control passing 10,000 feet AGL:

10. EJECT

CHAPTER FOUR
OUT-OF-CONTROL SYLLABUS MANEUVERS

You will perform a clearing turn immediately prior to each maneuver since you will lose considerable altitude in the departure.

You will complete the following checklist prior to the first departure.

DEPARTURE CHECKLIST

1. Stall/Aerobatic Checklist – Complete

2. Lap Belts – Tighten

3. Helmet Visor – Down

4. Rudder Pedals – Adjust Aft for Full Throw

5. Shoulder Harness – Locked

6. Landing Gear, Flaps/Slats – Up, Speed Brakes – Retracted

7. BATT Switches – On

8. CONTR AUG – SBI

9. Altimeter, AOA, Airspeed, & Turn Needle – Check Operation

10. ICS – Hot Mic

11. Throttle Friction – Set

12. DEPARTURE CHECKLIST COMPLETE

Upon returning the aircraft to wings level after each of the following maneuvers, check that the OIL PRESS warning light is out before adding power. It is possible that during gyrations, the oil pump may cavitate, and may cause oil pressure to drop to zero. If all engine instruments are indicating normally, add power. When you recover from the last departure, complete the following post-departure checklist:

POST-DEPARTURE CHECKLIST

1. CONTR AUG – ALL

After the last maneuver, you will most likely have to realign the navigation instruments. After landing, make a careful post-flight inspection of the aircraft. Look for popped rivets, loose or

missing screws and fasteners, and wrinkled or cracked skin—placing emphasis on the empennage area.

400. HIGH AOA DEEP STALL INVESTIGATION/RUDDER-INDUCED DEPARTURE

You will begin with an exploration of the fully stalled characteristics of the T-45. Previously, you have practiced stalls to learn recognition and recovery from the onset of the stall. This maneuver will demonstrate the flight characteristics much farther into the stall, up to approximately 30 units AOA.

Before entering a high AOA deep stall condition, you should know what indications to expect. You will not necessarily experience all of the following indications of deep stall, nor will you experience them in any particular sequence:

- Increasingly heavier buffeting as stall deepens
- Yaw rate
- Increasing sink rate
- Wing drop
- Reduced lateral control

Start at or above 19,000 feet, 200 KIAS in the clean configuration. Reduce power to IDLE and raise the nose 10 degrees to trade airspeed for altitude as the aircraft slows to 17 units AOA. Do not trim past 200 KIAS. You should notice that the rudder and aileron effectiveness will be adequate at 20 units.

As you increase AOA, you will get the rudder shakers at 21.5 units. As you slowly increase the AOA to 24-26 units, you will experience your first buffet and wing drop with very little warning. At 25-26 units AOA, the aircraft will be in light to moderate buffet, and you may encounter mild porpoising. Notice that the rudder and aileron effectiveness are reduced. Notice the adverse yaw generated by aileron deflection.

Increase the AOA to 27-28 units by smoothly but firmly applying full back stick. You will experience heavy buffet, wing drop, stall noise, and a large sink rate. Airspeed will be approximately 110-120 KIAS. The aircraft is fully stalled, and aileron effectiveness is marginal. Attempt to maintain wings level with rudder only. Do not use aileron to counter any roll tendencies. If the aircraft rolls into an angle of bank of 90 degrees or more, recover. If you are able to hold wings level with rudder, you will induce a departure with rudder only. Maintain full back stick and input half rudder in one direction to achieve greater than 30 degrees AOB. Try to return to level flight by inputting full rudder in the opposite direction. The aircraft should start to roll in the direction of the last rudder input, then quickly roll back into the initial direction and depart.

As the aircraft departs, perform your OCF procedures. The aircraft will quickly recover and airspeed will begin to build. Recover to the nearest horizon at 150 KIAS by rolling wings level and commencing an optimum AOA pullout (17 units). Do not pull past 17 units AOA to avoid pulling into an accelerated stall during recovery.

401. LOW-AIRSPEED DEPARTURES

The objective of the low-airspeed departure is to demonstrate the effects of inertia and loss of aerodynamic forces. At zero airspeed, the only forces acting on the aircraft are gravity and the inertia generated before reaching zero airspeed. If you hold the controls neutral, the effect of gravity will cause the aircraft to seek the relative wind. As the aircraft accelerates, flight controls will become effective before the AOA is reduced below stall. Consequently, any lateral control input (stick or rudder) will introduce a yaw rate. This coupled with a stalled AOA is a pro-spin input, so keep controls neutral until airspeed increases through 150 KIAS.

Low-airspeed departures can occur anytime airspeed is so low that aerodynamic forces are negligible and the aircraft is functionally ballistic. This can occur above 0 KIAS and in any nose-high attitude (not necessarily vertical).

NOTE

You ***will not*** initiate any low-airspeed departures within 20 degrees of pure vertical in the aircraft.

70-DEGREE NOSE-HIGH DEPARTURE

To enter the 70-degree nose-high departure, start at 300 KIAS minimum, no lower than 14,000 feet AGL. Begin a smooth 15-17 unit pull to 70 degrees nose-high and reduce power to idle as you decelerate below 150 KIAS. Apply aft stick as necessary referencing the ADI to maintain 70 degrees nose-up while decelerating. Do not use trim in this maneuver. As the aircraft departs, perform your OCF procedures. The departure is indicated by airspeed decreasing to 0 KIAS (actually 50 KIAS is the minimum on the airspeed indicator) and the nose falling. Neutralize flight controls as they become ineffective. Do not try to counter any oscillations as the nose falls through. At near zero airspeed, there will not be enough control authority to prevent oscillations, and any deviations from neutral may aggravate the situation as airspeed increases. If performed correctly, you should notice that the inertia of the aircraft will carry the nose through 90 degrees nose-low during recovery until the aerodynamic forces increase and allow the aircraft to seek the relative wind. As the airspeed increases through 150 KIAS, recover to the nearest horizon as in the high AOA deep stall departure.

NOTE

In the T-45 use the ADI to set the nose-high attitude, ***not*** the HUD.

110-DEGREE NOSE-HIGH DEPARTURE

To enter the 110-degree nose-high departure, start at 350 KIAS, no lower than 14,000 feet AGL. Begin a smooth 15-17 unit pull to 110 degrees nose-high and reduce power to idle as you decelerate below 150 KIAS. Apply forward stick as necessary referencing the ADI to maintain 110 degrees nose-high while decelerating. As the aircraft departs, perform your OCF procedures. Neutralize all controls as the airspeed decreases to 0 KIAS and recover as in the 70-degree nose-high departure. Expect to see the OIL PRESS warning light and possibly the FUEL PRESS caution light illuminate during this maneuver due to the low negative G experienced. These lights should extinguish during pullout as positive G is applied.

NOTE

In the T-45 use the ADI to set the nose-high attitude, ***not*** the HUD

90-DEGREE NOSE-HIGH DEPARTURE (SIMULATOR ONLY)

The objective of the 90-degree nose-high departure in the simulator is to demonstrate larger effects of inertia and loss of aerodynamic forces that cannot be demonstrated in the aircraft due to NATOPS restrictions. At zero airspeed straight up, the only force acting on the aircraft is gravity. A tail slide is likely to develop. Holding the controls neutral should cause the aircraft to seek the relative wind after the nose swaps positions with the tail. Since the aircraft is within 20 degrees of vertical, engine abnormalities could occur. Refer to and be familiar with engine relight and compressor stall procedures in the NATOPS manual.

To enter the 90-degree nose-high departure, start at 350 KIAS, no lower than 14,000 feet AGL. Begin a smooth 15-17 unit pull to the vertical on the ADI and reduce power to idle as you decelerate below 150 KIAS. Apply forward and aft stick as necessary referencing the ADI to maintain the aircraft at 90-degrees nose up while decelerating. Neutralize all controls as the airspeed decreases below 85 KIAS and perform your OCF procedures. Wait for the nose of the aircraft to carry itself through to 90-degrees nose low. Expect a lot of oscillations (PDGs) until the aircraft finds the relative wind. Hold neutral throughout until the airspeed reaches 150 KIAS, then recover to the nearest horizon.

NOTE

In the T-45 use the ADI to set the nose-high attitude, ***not*** the HUD

PEDAL TURNS (SIMULATOR ONLY)

The objective of the Pedal Turn is to demonstrate manual flight control function at high AOA and low airspeed, simulating the flat scissors that you will practice in the BFM stage. To begin the maneuver, ensure you are in a clean configuration, above 18,000 feet, with CONTR AUG in ALL. Slow the aircraft to 21-22 units AOA. Once at the desired AOA, advance the throttle to MRT and hold 21-22 units AOA. Next, establish a 30-degree AOB turn in the directed direction using rudder only. Once established in the turn, reverse to 30-degrees AOB in the opposite

direction utilizing rudder only. When directed, slow the aircraft to 26 units. Utilizing rudder and aileron continue to attempt turns in both directions until the aircraft experiences an adverse yaw departure.

402. LATERAL STICK ADVERSE YAW DEPARTURE

Lateral Stick Adverse Yaw Departure will demonstrate how turns and reversals at high AOA (found in BFM) need to be flown with coordinated rudder and aileron. This will also show that once the aircraft has departed, it is time to stop fighting the aircraft and work on recovering it.

Start the maneuver at or above 19,000 feet AGL and 260 KIAS. Set 15 degrees nose up. Roll to 80 – 90 degrees AOB, and pull power to idle decelerating to 250 KIAS. At 250 KIAS firmly apply full aft stick and full opposite aileron from the direction of turn. Maintain rudder pedals neutral. You will notice that the aircraft response will be sluggish and will tend to depart opposite the applied aileron—this action is caused by adverse yaw. Perform your OCF procedures as the aircraft departs controlled flight and recover.

403. TURNS

Turn performance is a key factor in BFM. Modern fighters are evaluated on their turn performance, both in turn rate (degrees per second) and turn radius. Aircraft that can sustain high turn rates and small turn radii without sacrificing energy will have the advantage over inferior opponents. You can discover the turn capabilities of the T-45 by performing several turns:

Engaging turn

Engaging turns are entered at 15,000 feet/300 KIAS, and executed at MRT, 14 units AOA, and slightly nose-low. The engaging turn allows the pilot to maintain his energy while maneuvering for an engagement. You can practice your engaging turns at 300 KIAS and 14 units, which will generate a turn rate of approximately 7 degrees per second (50 seconds for a 360-degree turn).

Hard turn

Hard turns are entered at 15,000 feet/300 KIAS, executed at MRT, 17 units AOA, and with enough nose-low attitude to maintain 300 KIAS. Practice your hard turns at 300 KIAS and 17 units. This is a good trade-off between turn rate and turn radius. Try to fly this turn without reference to your instruments, in other words, fly it by feeling for that nibble of buffet. You will have to trade some altitude to maintain your airspeed at 300 KIAS. Typical hard turns will generate a turn rate of approximately 10 degrees per second (36 seconds for a 360-degree turn).

Break turn

Break turns are entered at 15,000 feet/300 KIAS, executed at MRT (or IDLE to minimize heat signature) and 19-21 units AOA, stressing the 10-degree rule to the deck to introduce deck awareness. To enter the break turn demo, execute a maximum performance break turn of 19-21

units AOA, overbanking to approximately 135 degrees and pulling to 50 degrees nose low. Intercept the 10-degree rule to the deck (the deck normally being 10,000 feet). For example, at 3,000 feet above the deck dive angle should be no more than 30 degrees, at 2,000 feet no more than 20 degrees and at 1,000 feet no more than 10 degrees nose low. Strive to be on the deck at the T-45 max sustained tactical turn rate band of 300-330 KIAS.

Break turns give you the maximum instantaneous turn rate, but will result in rapidly bleeding energy. If you try to perform a maximum performance turn for 360 degrees, you can generate a turn rate up to 11 degrees per second (approximately 33 seconds for a 360-degree turn), but you may lose 5,000 feet or more altitude to maintain 300 KIAS. To achieve your best turn rate, you should smoothly track the nose through the turn and avoid "pitch-bucking" the aircraft.

404. VERTICAL MANEUVERING

You can practice vertical maneuvering to become comfortable with using nose-high and nose-low turns in BFM. You may (at IP's discretion) perform 300-KIAS loops and split-S maneuvers to investigate the altitude loss in these maneuvers. Particularly note the altitude needed to recover from the split-S and other nose-low maneuvers. Begin split-S maneuvers at or above 16,000 feet AGL.

405. ONE-CIRCLE FIGHT

You may practice flying slow-speed, high-AOA flight similar to a horizontal scissors. Smoothly maintaining 20-22 units AOA will allow you to keep the nose from stalling to sustain slow-speed flight. You must be smooth and keep the jet out of pitch-buck or you will stall the wings, drop the nose, and increase airspeed.

406. DEFENSIVE DRILLS

Practicing some defensive turns will pay dividends when you get to defensive BFM. Practice performing hard and break turns while looking back over your shoulder to keep sight of a simulated bandit. Try to maneuver your body so that you can see the tail of the aircraft while turning. Defensive turns in BFM are difficult and uncomfortable, but are an essential part of your flight training. Most problems occur from losing sight of the bandit as he approaches your aft visibility limit; "lose sight, lose the fight," so work on improving your aft visibility limits.

407. TWO-CIRCLE FIGHT (EXTENSIONS/PITCH-BACKS)

Practice your extensions by unloading to 0 G to achieve a high energy state, then pitch-back with a maximum performance break turn, while looking aft to simulate keeping sight of your opponent.

Enter the extension/pitch-back demo at 15,000 feet AGL, unloading the aircraft to 0 G and accelerating to 350 KIAS or greater. A simulated "FOX-2" from a notional bandit will follow. At this time, execute a pitch-back maneuver (break turn) to simulate defeating the notional bandit's valid FOX-2.

408. ACCELERATION DEMO

Timed from 300 KIAS to 350 KIAS level, and from 300 KIAS to 350 KIAS with a negative-G unload. You'll find that by unloading the T-45, the time it takes to get from 300 KIAS to 350 KIAS is cut by over half. So, unloading down to the deck is the proper technique to execute a BUGOUT in Basic Fighter Maneuvering.

409. FLAT SCISSORS DEMO

Refer to the CNATRA T-45 Basic Fighter Maneuvering (BFM) FTI.

410. ROLLING SCISSORS DEMO

Refer to the CNATRA T-45 Basic Fighter Maneuvering (BFM) FTI.

NOTES

CHAPTER FIVE
CONCLUSION TO OUT-OF-CONTROL FLIGHT

500. CONCLUSION

As a tactical aviator, you must be able to fly the aircraft to its max performance limits, the edge of the envelope, in order to take full advantage of the capabilities for weapons employment. Consequently, you will occasionally exceed these limits, and suddenly find yourself in uncontrolled flight. Although sometimes spectacular, it is a phase of flight that you should not fear; it is a natural consequence of flying the aircraft to its limits. Every tactical pilot must be prepared to handle uncontrolled flight by:

1. Knowing the aircraft and studying the NATOPS flight manual for out-of-control flight characteristics.

2. Knowing the procedures. The recovery procedures must become second nature – ***know them cold!***

3. Neutralizing controls and power to idle. Immediately upon losing control, positively position the controls to neutral and reduce power to idle until recovery or a steady-state spin has been confirmed.

4. Being patient. Hasty control application can lead to trouble.

5. Checking the altimeter. If you don't have sufficient altitude, EJECT. There is no reason to spend the rest of your life trying to recover the aircraft.

OCF is simply another phase of flight. Every aviator can cope with it. If you know the procedures and maintain a cool head, you will quickly have the aircraft under control allowing the flight, and sometimes the fight, to go on.

NOTES

CHAPTER SIX
SELF TEST

1. What is OCF?

2. Why do we practice OCF maneuvers?

3. List the five phases of OCF.

4. What are the T-45 key stall AOAs?

5. What is a departure as defined by CNATRA?

6. What are the indications of the five phases of OCF?

7. What are the indications of an impending departure?

8. List the four instruments associated with OCF recovery.

9. What are the T-45 OCF recovery procedures, including inverted and upright spins?

10. What are the indications associated with high AOA/deep stall?

11. Describe the procedures for performing the High AOA/Deep Stall Investigation.

12. T/F: You will perform a 90-degree nose-high departure in both the simulator and the aircraft.

13. You will not initiate any low-airspeed departure within how many degrees of pure vertical?

14. The primary instrument you will use in the T-45 for the 70-degree and 110-degree nose-high departure is the _____.

15. State the procedures for performing the Lateral Stick/Adverse Yaw Departure maneuver.

THIS PAGE INTENTIONALLY LEFT BLANK

APPENDIX A
GLOSSARY

A

Aerodynamic Center:
The point along the wing chord where all changes in lift effectively take place.

Angle of Attack (AOA):
The instantaneous angle between a reference line on the airplane (usually the wing chord line) and the relative wind direction.

C

Center of Gravity:
A point at which the weight of an object may be considered concentrated for weight and balance purposes.

D

Departure:
The phase of flight during which the airplane goes from controlled to uncontrolled flight.

I

Incipient Spin:
The initial, transitory phase of spin characterized by yawing, rolling, and pitching motions during which it is possible to begin to identify the spin mode. Rotational motion of an airplane following a stall, but prior to the equalization of aerodynamic and inertial forces.

Inertia Coupling:
Coupling results when some disturbance about one aircraft axis causes a disturbance about another axis. There are two principal axis systems: (1) the aerodynamic and (2) the inertia. When the inertia axis is inclined to the aerodynamic axis, rotation about the aerodynamic axis will create centrifugal forces and cause a pitching moment. In this case, a rolling motion of the aircraft induces a pitching moment through the action of inertia forces. This is inertia coupling. If the inertia axis and the aerodynamic axis are aligned, no inertia coupling would result from a rolling motion.

M

Maneuvering (Cornering) Speed:
Maximum speed where aerodynamic limit is reached prior to structural limit--aircraft at this speed cannot be overstressed.

Moment of Inertia:
With respect to any given axis, the moment of inertia is a measure of the resistance of a body to angular acceleration.

N

Negative-G Spike:
Transient increase in negative-G force.

P

Post-Departure Gyrations (PDGs):
The transitional period of positive or negative acceleration between departure and either recovery or spin. It is characterized by random, uncontrollable motions of the airplane about any or all axes. Much of the motion can be attributed to inertia forces and moments.

S

Sideslip Angle:
Relation between the displacement of the aircraft centerline from the relative wind rather than from a reference axis.

Spin:
A maneuver combining yaw rate and stalled AOA in which both wings are stalled and produce differential aerodynamic forces resulting in autorotation.

Spiral:
A maneuver during which the aircraft descends rapidly toward the earth in a helical movement about a vertical axis similar to a spin axis. The AOA during a spiral is less than the stall AOA, resulting in a spiral rather than a spin.

Stall:
That AOA beyond which a further increase in AOA will produce a decrease in lift.

Static Directional Stability:
The weathervane tendency of the aircraft or the tendency of an aircraft to return to steady-state flight after a disturbance in the horizontal plane.

Steady-State Spin:
A spin in which all aerodynamic forces are balanced.

T

Transverse G:
The force of acceleration measured in ft/sec^2 acting along the longitudinal axis of the aircraft during acceleration or deceleration.

W

Wing Walk:
An unintentional maneuver during approach, waveoff or takeoff where very high AOA and pitch attitude will result in a loss of horizontal stabilator authority. The wing is positioned in a stall condition and the aircraft is kept aloft by the thrust vector. Ailerons or elevators remain marginally effective resulting in wing walk.

Y

Yaw Angle:
The displacement of the aircraft centerline from a reference azimuth.

Yaw Rate:
Rate of change of yaw angle, or how fast the nose of the aircraft is moving across the horizon. It is measured in degrees/second.

THIS PAGE INTENTIONALLY LEFT BLANK

APPENDIX B
STUDY GUIDE

Study Resources for OCF Flight Procedures:

A. T-45 NATOPS Flight Manual, A1-T45AB-NFM-000
B. Out-of-Control Flight FTI
C. Lesson Guide for AER0103
D. MlL for FAM1101
E. Aerodynamics for Naval Aviators, NAVAIR 00-80T-80

OCF1101-1102: "Out-of-Control Flight." 2.0 hr. MIL/Test

Lesson Preparation:

- Read Chapter 11, "Flight Characteristics" of Resource (A) above
- Read this FTI
- Review Resource (C), above
- Review Resource (D), above
- Read Resource (E), above

Lesson Objectives:

- Recall the definition of out-of-control flight
- Recall the five phases of out-of-control flight
- Recall the T-45 key Stall AOA's
- Recall the CNATRA definition of departure
- Recall the indications of each of the five phases of out-of-control flight
- Recall the indications of impending departure
- Recall the four instruments associated with OCF recovery
- Recall recovery procedures for out-of-control flight, including inverted and upright spins
- Recall indications associated with high AOA/deep stall
- Recall procedures/techniques for performing high AOA/deep stall investigation
- Recall procedures/techniques for performing low-airspeed departures
- Recognize lateral stick adverse yaw departure
- Recall procedures/techniques for performing lateral stick adverse yaw departure
- Relate variable aircraft factors to BFM performance

NOTES

APPENDIX C
INDEX

A

Accelerated Stall 3-2, 3-3, 4-3
Adverse Yaw Departure.....4-4, 6-1, B-1
Angle Of Attack.....2-1, 2-16, 2-19, 3-2, A-1
Autorotation 2-11, 2-16, 2-21, A-2

B

Break Turn 4-5, 4-6

C

Clean Configuration..... 3-1, 3-2, 4-2
Control Inputs 2-10, 2-11, 2-18, 2-23, 3-3

D

Departure 1-1, 2-8, 2-10, 2-11, 2-12, 2-14, 2-18, 2-23, 3-2, 3-3, 3-4, 3-7, 3-8, 3-9, 3-10, 4-1, 4-2, 4-3, 4-4, 4-5, 6-1, A-1, A-2, B-1
Directional Departures 3-2

E

Engaging Turn 4-5
Erect Spin..... 2-12, 2-17, 2-21

F

Fully Developed Spin 3-4

G

G-Force Distortion 2-22

H

Hard Turn..... 4-5

I

Incipient Spin A-1
Inverted Spin 2-16, 2-17, 2-18, 3-3, 3-4, 3-5, 3-6, 3-7, 3-8, 3-9

L

Landing Configuration.....3-1, 3-2

M

Mass Distribution..... 2-6, 2-7, 2-8, 2-19

R

Recovery .. 2-8, 2-11, 2-13, 2-14, 2-18, 2-19, 2-20, 2-21, 2-22, 3-1, 3-2, 3-3, 3-4, 3-6, 3-7, 3-8, 3-9, 3-10, 4-2, 4-3, 5-1, 6-1, A-2, B-1

S

Spin Recovery.....2-8, 2-14, 2-21, 3-4, 3-9
Stall ... 2-8, 2-9, 2-10, 2-11, 2-14, 2-16, 2-16, 2-17, 2-18, 2-22, 3-1, 3-2, 3-3, 3-9, 4-1, 4-2, 4-3, 4-4, 4-6, 6-1, A-1, A-2, B-1
Stall Characteristics 3-1, 3-2
Steady-State Spin 2-8, 2-18

T

Time Distortion..... 2-22
Turns 4-4, 4-5, 4-6

U

Upright Spins 3-3, 3-7, 6-1, B-1

V

Vertical Maneuvering 3-2, 4-6

Y

Yaw Angle 2-2, A-3
Yaw Rate.. 2-2, 2-10, 2-12, 2-13, 2-14, 2-17, 2-19, 2-21, 2-22, 3-7, 4-2, 4-3, A-2, A-3

NOTES