FLIGHT TRAINING INSTRUCTION

CONTACT HELICOPTER ADVANCED PHASE TH-57

2011

CNATRA P-457 (REV. 4-11)

Subj: FLIGHT TRAINING INSTRUCTION, CONTACT, TH-57

1. CNATRA P-457 (Rev. 4-11) PAT, "Flight Training Instruction, Contact, TH-57" is issued for information, standardization of instruction, and guidance to all flight instructors and student military aviators within the Naval Air Training Command.

2. This publication is an explanatory aid to the Helicopter curriculum and shall be the authority for the execution of all flight procedures and maneuvers herein contained.

3. Recommendations for changes shall be submitted via CNATRA TCR form 1550/19 in accordance with CNATRAINST 1550.6 series.

4. CNATRA P-457 (Rev. 12-06) PAT is hereby cancelled and superseded.

THOMAS E. BRODERICK
Chief of Staff

Distribution:
CNATRA Website

FLIGHT TRAINING INSTRUCTION

FOR

CONTACT

TH-57

Q-2A-0015

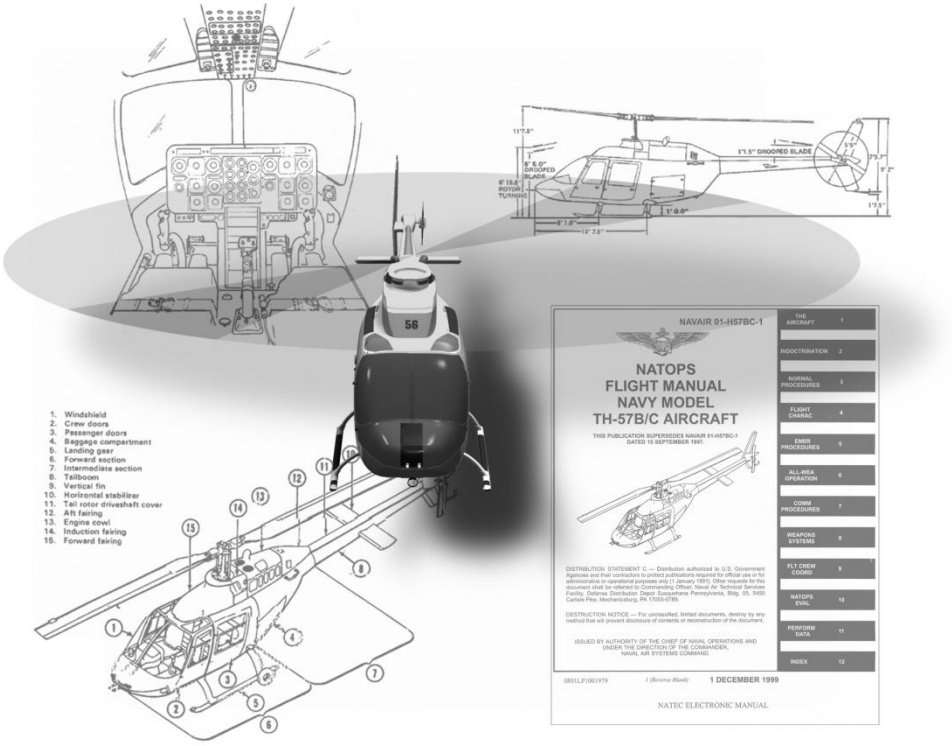

LIST OF EFFECTIVE PAGES

Dates of issue for original and changed pages are:
Original...0...15 Aug 02 (this will be the date issued)
Revision1…0…12 Feb 04
Revision2…0…15 Dec 06
Change Transmittal…1…08 Sep 08
Revision3…0…01 Aug 11
Change Transmittal…1…06 Feb 13

TOTAL NUMBER OF PAGES IN THIS PUBLICATION IS 146 CONSISTING OF THE FOLLOWING:

Page No.	Change No.	Page No.	Change No.
COVER	0	6-1 – 6-26	1
LETTER	0	7-1 – 7-7	0
vii -- viii	1	7-8 (blank)	0
x (blank)	0	8-1 – 8-14	0
1-1 – 1-8	0	A-1	0
2-1 – 2-5	0	A-2 (blank)	0
2-6 (blank)	0	B-1 – B-5	0
3-1 – 3-7	0	B-6 (blank)	0
3-8 (blank)	0		
4-1 – 4-41	0		
4-42 (blank)	0		
5-1 – 5-16	0		

INTERIM CHANGE SUMMARY

The following Changes have been previously incorporated in this manual:

CHANGE NUMBER	REMARKS/PURPOSE
1	Changes made per transmittal letter (02-06-13)

The following interim Changes have been incorporated in this Change/Revision:

INTERIM CHANGE NUMBER	REMARKS/PURPOSE	ENTERED BY	DATE

TABLE OF CONTENTS

LIST OF EFFECTIVE PAGES ..... **iv**
INTERIM CHANGE SUMMARY ..... **v**
TABLE OF CONTENTS ..... **vi**
TABLE OF FIGURES ..... **ix**

CHAPTER ONE - CONTACT **1-1**
100. INTRODUCTION 1-1
101. THE FLIGHT INSTRUCTOR 1-2
102. THE AIRCRAFT 1-2
103. COCKPIT FAMILIARIZATION 1-2
104. C0301 1-2
105. PHYSICAL CONDITION 1-2
106. CREW RESOURCE MANAGEMENT (CRM) 1-3
107. CREW RESOURCE MANAGEMENT APPLIED TO THE FLIGHT SEQUENCE 1-6

CHAPTER TWO - FUNDAMENTALS OF HELICOPTER CONTROL **2-1**
200. INTRODUCTION 2-1
201. CYCLIC CONTROL 2-1
202. COLLECTIVE CONTROL 2-2
203. ANTI-TORQUE PEDALS 2-3
204. TWIST GRIP (THROTTLE) 2-4

CHAPTER THREE - BASIC MANEUVERS **3-1**
300. INTRODUCTION 3-1
301. ATTITUDE FLYING 3-1
302. ATTITUDE CONTROL AND AIRSPEED 3-2
303. ATTITUDE CONTROL AND COORDINATED TURNS 3-2
304. POWER CONTROL AND RESULTING ALTITUDE, CLIMB, OR DESCENT 3-4
305. TURBULENCE AND WINDS 3-5
306. CROSSWIND CORRECTIONS 3-5
307. SCAN 3-6

CHAPTER FOUR - FLIGHT TRAINING MANEUVERS - LOW WORK **4-1**
400. INTRODUCTION 4-1
401. VERTICAL TAKEOFF 4-1
402. HOVER 4-3
403. VERTICAL LANDING 4-5
404. TURN ON THE SPOT/CLEARING TURN 4-6
405. HOVER TAXI/AIR TAXI 4-10
406. SQUARE PATTERNS 4-12
407. TRANSITION TO FORWARD FLIGHT 4-14
408. MAXIMUM LOAD TAKEOFF (SIMULATED) 4-17

409. NO HOVER TAKEOFF 4-18
410. NORMAL CRUISE 4-19
411. CLIMBS 4-20
412. NORMAL DESCENTS 4-21
413. LEVEL SPEED CHANGE/CONTACT STAGE 4-22
414. TURN PATTERN/CONTACT STAGE 4-24
415. NORMAL APPROACH 4-25
416. MODIFIED NORMAL APPROACH 4-28
417. STEEP APPROACH 4-29
418. WAVEOFF – POWER ON 4-31
419. WAVEOFF – POWER OFF 4-32
420. QUICK STOP FROM A HOVER 4-34
421. SLIDING LANDING 4-36
422. NO HOVER LANDING 4-37
423. HYDRAULIC BOOST-OFF APPROACH 4-39
424. STAB OFF APPROACH 4-40

CHAPTER FIVE - AUTOROTATION MANEUVERS 5-1
500. INTRODUCTION 5-1
501. SIMULATED ENGINE FAILURE IN A HOVER AND HOVER TAXI (CUT GUN) 5-1
502. AUTOROTATIONS 5-4
503. SIMULATED ENGINE FAILURE AT ALTITUDE 5-12
504. CHECKING POWER AVAILABLE AT ALTITUDE 5-15

CHAPTER SIX - DEMONSTRATION AND IUT MANEUVERS 6-1
600. INTRODUCTION 6-1
601. LOW RPM RECOVERY (IUT ONLY) 6-1
602. SIMULATED ENGINE FAILURE ON TAKEOFF (DEMO ONLY) 6-2
603. MAXIMUM GLIDE AUTOROTATION 6-2
604. HIGH SPEED LOW-LEVEL AUTOROTATION (DEMO ONLY) 6-3
605. SIMULATED FIXED PITCH PEDAL POSITION IN A HOVER –NO YAW (DEMO ONLY) 6-5
606. SIMULATED COMPLETE LOSS OF T/R THRUST IN A HOVER-(DEMO ONLY) 6-7
607. SIMULATED FIXED PITCH PEDAL POSITION IN A HOVER – LEFT YAW-(DEMO ONLY) 6-8
608. SIMULATED FIXED PITCH PEDAL POSITION IN A HOVER – RIGHT YAW -(DEMO ONLY) 6-11
609. SIMULATED FIXED PITCH PEDAL POSITION AT ALTITUDE– LOW POWER (DEMO ONLY) 6-14
610. SIMULATED FIXED PITCH PEDAL POSITION AT ALTITUDE –HIGH POWER (DEMO ONLY) 6-19
611. POWER OFF WAVEOFF (IP AND IUT ONLY) 6-24

CHAPTER SEVEN - EMERGENCY PROCEDURES 7-1
700. INTRODUCTION 7-1
701. LEARNING EMERGENCY PROCEDURES 7-1
702. SINGLE INSTRUMENT INDICATIONS 7-2
703. SIMULATED EMERGENCIES AT ALTITUDE/SITE 7-3

CHAPTER EIGHT - NIGHT OPERATIONS 8-1
800. INTRODUCTION 8-1
801. LIMITATIONS 8-1
802. PREFLIGHT INSPECTION 8-2
803. USE OF LIGHTS 8-5
804. NIGHT TAKEOFF 8-6
805. NIGHT LANDINGS 8-7
806. NIGHT HOVERING TECHNIQUES 8-7
807. NIGHT HOVER TAXI 8-8
808. NIGHT EMERGENCY PROCEDURES 8-8
809. FORCED LANDINGS 8-9
810. NIGHT PRACTICE AUTOROTATIONS 8-9
811. NIGHT PILOTAGE 8-9
812. NIGHT LOW ALTITUDE NAVIGATION 8-10

APPENDIX A - GLOSSARY A-1
A100. NOT APPLICABLE A-1

APPENDIX B - SOLO GUIDELINES B-1

TABLE OF FIGURES

Figure 3-1 **Axes About Which Aircraft Attitude is Controlled 3-1**
Figure 3-2 **Loss of Vertical Lift During Turns..... 3-3**
Figure 3-3 **Load Factors In Various Angles of Bank During Level Turns 3-4**

Figure 4-1 **Effect of Wind on The Lift Vectors 4-7**
Figure 4-2 **Effect of Wind on The Lift Vectors 4-8**
Figure 4-3 **Effect of Wind on The Lift Vectors 4-8**
Figure 4-4 **Effect of Wind on Rate of Turn 4-9**
Figure 4-5 **Taxi Signals..... 4-11**
Figure 4-6 **Normal Approach 4-27**

Figure 8-1 **PAC/PNAC Duties 8-4**

THIS PAGE INTENTIONALLY LEFT BLANK

CHAPTER ONE
CONTACT

100. INTRODUCTION

In the course of helicopter flight training, you will be required to learn the precision skills that are characteristic of all naval helicopter pilots. This will require a tremendous amount of determination, initiative, and perseverance on your part. In return, everyone at this command will do everything possible to help you accomplish this goal.

Learning to fly helicopters will be one of the most challenging and rewarding endeavors you will ever undertake. First, you will learn how to hover. That is to hold the aircraft in nearly motionless flight over a reference point at a constant altitude. Next, you will progress to taxiing the aircraft from one point to another. You will also practice vertical takeoffs and landings, normal approaches, and turns about a spot. Later, as you progress and gain further experience in flying a helicopter, you will be introduced to autorotations and engine failures at altitude. Following satisfactory completion of the C4390 check ride you will be off for your first solo flight as an unrestricted aviator.

In order for you to learn what you need about flying helicopters, it is necessary for you to become intimately familiar with this flight training instruction (FTI). Helicopter training involves close coordination between academics and flight instruction. The better you understand the academic theory, the easier it is for you to learn maneuvers in the helicopter. In addition to the FTI you should consult the following publications:

1. TH-57 NATOPS Flight Manual

2. Engineering, Helicopter, publications

3. Aerodynamics, Helicopter, publications

4. Rotary -Wing Operations Procedures Manual,

5. COMTRAWINGFIVEINST 3710.8

6. Master Curriculum Guide, TH-57

7. Squadron SOP

Learning to fly can be defined as developing the proper reaction to an experience in the aircraft. No one can understand the proper reaction to each step without preparation. A thorough working knowledge of procedures is essential for your safe and successful completion of flight training. You must, however, go beyond rote memorization of procedures and strive for a clear understanding of each maneuver before you get into the cockpit and fly the maneuver. Remember, the knowledge gained in this stage of your training will be utilized time and time again throughout your career in naval aviation.

101. THE FLIGHT INSTRUCTOR

The helicopter flight instructors at Whiting Field are among the most highly qualified pilots in naval aviation today. Their objective is to train professional pilots and they expect you to put forth your best effort at all times. If your instructor seems to place a great amount of importance on exactness, it is because he/she is attempting to train you to be as close to perfection as possible. Sloppy flying and minimal standards are not goals of any instructor pilot. The word you will hear most from your instructor is "PROCEDURES!" In order for your time in the aircraft to be devoted to improving your performance, it is imperative you learn, memorize, and *understand* the procedural steps required to perform each of the various maneuvers. The instructors' job is not to teach you procedures, but to fly. The instructor is well trained and qualified to teach his/her student, but his/her success requires the students' complete cooperation.

102. THE AIRCRAFT

The TH-57 "Sea Ranger" will be the helicopter you fly throughout rotary training. The TH-57 is a single-engine, land-based, utility-type helicopter designed for takeoff and landing on any reasonably level and firm terrain. The standard seating configuration provides for pilot, co-pilot, and three passengers. The pilot's station is on the right side but a full set of flight controls is also installed on the left side. A Rolls Royce 250-C20J engine powers the helicopter. The engine weighs 157 pounds and is capable of developing 420 shaft horsepower on a standard day. It is restricted to 317 shaft horsepower due to transmission limitations.

103. COCKPIT FAMILIARIZATION

Before you climb into the TH-57 for the first flight you *will* have practiced the use of checklists and emergency procedures several times. While you are awaiting your opportunity to fly, you may find yourself without a specific assignment. You can use this time to become familiar with the cockpit of the aircraft by sitting in it and learning the locations of the various instruments and switches. Numerous aircraft are available in the squadron hangar for your use. You should coordinate with Aircraft Issue prior to practicing cockpit procedures or the preflight.

104. C0301

Prior to your first flight, there are several fundamental topics that you, as a student aviator, must understand if you are to obtain maximum benefit from your helicopter training. C0301 provides you the opportunity to learn the preflight, meet a Contact flight instructor, and discuss any questions you might have prior to your first brief. Make your initial appearance, and each succeeding appearance before an instructor a good one. Bear in mind military courtesy and discipline are important factors in your training and will continue to be as long as you are a member of the military service.

105. PHYSICAL CONDITION

Absorbing flying lessons quickly and completely takes physical stamina. Even if you are in top physical condition, the first few days of training will be fatiguing. Your first flights will not be

long, but they will seem like it. As you become more accustomed to your flight training, you will find you are more relaxed in the cockpit, and you will not be as tired after your flights. Mental fatigue is also a condition to consider. Develop a sound and systematic schedule that will provide maximum utilization of your study, recreation, and rest time. This course is not programmed to physically and mentally exhaust you; however, you must carefully regulate your spare time in order to successfully meet the demands of flight training.

106. CREW RESOURCE MANAGEMENT (CRM)

Although there has been a dramatic decrease in the number of military aircraft mishaps due to better aircraft, improved maintenance procedures, and the NATOPS program there is still a significant amount of costly assets being lost. Some external factors beyond the control of the aircrew often adversely impact the mission and cause mishaps. There is nothing an aviator can do in those situations; however, 50 to 80 percent of all mishaps in the Navy/Marine Corps involve pilot error. The Navy has instituted the CRM program to educate and train its pilots to prevent such mishaps. CRM has been implemented in various platforms in the Fleet and is also being taught in most Fleet Replacement Squadrons. Utilizing and implementing the proper use of CRM will be the foundation of Naval Aviation in the future.

CRM describes the process of coordinated action among crewmembers which enables them to interact effectively while performing mission tasks. Good CRM can increase mission effectiveness by minimizing crew preventable errors, maximizing crew resources, and optimizing risk management. The Naval Training Systems Center has identified several skills and behaviors, which influence CRM. These behaviors have been classified into seven basic areas.

1. **Decision Making:** the ability to use logical and sound judgment based on the information available. Factors that promote good decision-making are:

   a. Teamwork.

   b. Extra time to make a decision.

   c. Alert crewmembers.

   d. Decision strategies and experience.

2. **Assertiveness:** the willingness to actively participate and ability to state and maintain your position. Aircrew members can assert themselves by:

   a. Providing relevant information without being asked.

   b. Making suggestions.

   c. Asking questions as necessary.

d. Confronting ambiguities.

e. Maintaining their position when challenged.

f. Stating opinions on decisions/procedures.

g. Refusing an unreasonable request.

3. **Mission Analysis:** the ability to coordinate, allocate, and monitor crew and aircraft resources. Mission analysis occurs before, during, and after a mission and consists of a (n):

a. Pre-mission organizing and planning.

b. In-flight monitoring and updating.

c. Post-mission review.

4. **Communication:** the ability to clearly and accurately send and acknowledge information, instructions, or commands and provide useful feedback. It is important to make sure everybody fully understands what is being communicated in order to:

a. Conduct effective missions.

b. Avoid mishaps.

c. Pass information from one person to another.

d. Maintain group situational awareness.

Sender's Responsibilities:

a. Communicating information clearly.

b. Conveying information accurately, concisely, and timely.

c. Requesting verification or feedback.

d. Verbalizing plans.

Receiver's Responsibilities:

a. Acknowledge communication.

b. Repeat information.

c. Paraphrase information.

d. Clarify information.

e. Provide useful feedback.

5. **Leadership:** the ability to direct and coordinate the activities of other crewmembers and to stimulate the crew to work together as a team. The leader is in control of the situation and has certain responsibilities. Aircrew leaders must be able to:

a. Direct and coordinate the crew's activities.

b. Delegate tasks.

c. Make sure the crew understands what is expected of them.

d. Focus attention on the crucial aspects of the situation.

e. Keep crewmembers informed of the mission information.

f. Ask crew members for mission relevant information.

g. Provide feedback to the crew on their performance.

h. Create and maintain a professional atmosphere.

6. **Adaptability/Flexibility:** the ability to alter a course of action to meet situational demands. Adaptable/Flexible aircrew members should be able to:

a. Adjust to meet situational demands.

b. Be open and receptive to other ideas.

c. Maintain constructive behavior under pressure.

d. Adapt to internal and external environmental changes.

7. **Situational Awareness:** how accurately your interpretation of reality matches actuality. Mission success depends on your ability to maintain or recover situational awareness. The following techniques are used to maintain situational awareness:

a. Detect and comment on deviations from what you observe compared to what you expected.

b. Provide information in advance.

c. Identify potential problems.

d. Demonstrate an awareness of task performance & mission status.

As members of a multi-crew platform, helicopter pilots are expected to optimize CRM to produce maximum mission effectiveness. The Flight Crew Coordination chapter of the TH-57 NATOPS Manual lists specific responsibilities for the crewmembers in various mission scenarios.

107. CREW RESOURCE MANAGEMENT APPLIED TO THE FLIGHT SEQUENCE

1. **Mission Planning**

a. Pilot In Command (PIC) ensures NOTAMs are checked. (Mission Analysis)

b. PIC ensures weather briefing has been received. (Mission Analysis)

c. PIC ensures fuel requirements are met. (Mission Analysis)

d. PIC ensures weight and balance requirements are met. (Mission Analysis)

2. **Aircrew Brief**

a. Instructor Pilot, Instructor Under Training, or Student Naval Aviator conducts thorough flight brief IAW NATOPS/ORM Briefing Guide. (Mission Analysis)

b. Student Naval Aviator or Instructor Under Training clarifies procedures for safety of flight parameters/procedures. (Mission Analysis)

c. Instructor Pilot, Instructor Under Training, or Student Naval Aviator briefs passing flight controls (three way) per NATOPS. (Communication)

d. Student Naval Aviator or Instructor Under Training questions instructor about any unclear aspects of brief. (Assertiveness)

3. **Preflight Inspection**

a. Crew reviews Aircraft Discrepancy Book (ADB). (Situational Awareness)

b. Student Naval Aviator notifies Instructor Pilot of any discrepancies found during pre-flight. (Assertiveness)

4. **Start**

a. Pilot at Controls (PAC) ensures aircraft is clear each side. (Situational Awareness)

b. PAC notifies Plane Captain of pending engine start using standard NATOPS hand/light signals. (Situational Awareness)

5. **Flight Control Checks**

PAC directs Pilot Not at Controls (PNAC) to check the aircraft clear. (Communication)

6. **Pretakeoff Communications**

a. PAC calls outbound on base frequency. (Communication)

b. PAC obtains ATIS information. (Situational Awareness)

c. PAC calls Clearance Delivery (as required). (Communication)

d. PAC directs PNAC to perform takeoff checklist. (Communication)

e. PAC calls Ground for taxi. (Communication)

7. **Takeoff**

a. PAC requests takeoff from Tower prior to Hold Short. (Communication)

b. PAC directs PNAC to check fuel, note time, and turn transponder to ALT. (Situational Awareness)

c. PAC notes HIGE torque and reports "Caution panel clear, gauges green" on ICS prior to forward flight. (Situational Awareness)

8. **In Flight Procedures**

a. PNAC verbally notifies PAC of deviations from established parameters. (Assertiveness)

b. PNAC verbally notifies PAC of any unsafe or imminently dangerous situations. (Assertiveness)

c. PAC /PNAC monitor engine/flight instruments, gauges, lights, and fuel status. (Situational Awareness)

d. PNAC takes controls and simultaneously announces, "I have the controls," if safety parameters are exceeded. (Assertiveness)

e. PAC /PNAC obtain dual concurrence prior to manipulating system switches. (Communication)

f. All crewmembers clear respective sides, up and down when turning, sliding left/right, climbing, descending, before takeoff or transitioning to forward flight. (Situational Awareness)

g. All crewmembers properly monitor radio calls. (Situational Awareness)

h. PAC directs PNAC to tune radios, NAVAIDS, etc. as required to assist the Pilot at Controls. (Communication)

9. **Prelanding**

a. PAC notifies aircrew of type of approach, type of landing, and intended point of landing. (Communication)

b. PAC requests landing clearance in a timely manner, as required. (Situational Awareness)

c. PAC ensures Landing Checklist is completed prior to pattern entry. (Situational Awareness)

10. **OT Refueling**

PAC ensures Hot Refueling Checklist complete prior to hot refueling. (Situational Awareness)

11. **Shutdown**

a. PNAC properly signals Plane Captain for shutdown using standard hand/light signals. (Communication)

b. PAC waits for shutdown signal from Plane Captain before rolling twist grip off. (Situational Awareness)

12. **Post Flight Debrief**

All crewmembers ensure a proper debrief is conducted by PIC. (Mission Analysis)

CHAPTER TWO
FUNDAMENTALS OF HELICOPTER CONTROL

200. INTRODUCTION

Despite their appearance, the controls for a helicopter are very similar to those in a fixed-wing aircraft. To adequately master either type aircraft, the pilot must be thoroughly familiar with how the aircraft reacts to control inputs. Smooth control inputs conserve power, promote passenger confidence, and increase mission effectiveness.

The transition to helicopter flying requires no radical change in thought processes, but it does require the acquisition of new skills and knowledge. The pilot will find he has more control over the helicopter than over fixed-wing aircraft. Therein lies the first problem, helicopters will not respond to inputs like fixed-wing aircraft. The old adage, "power plus attitude equals performance" is not always true for rotary-winged aircraft.

This section is devoted to a basic explanation of the four separate controls that make up the helicopter control system. The basic helicopter controls consist of the following:

1. The Cyclic controls the pitch attitude and roll angle of the helicopter.

2. The collective acts much like the throttle in a fixed-wing aircraft. The collective controls the amount of thrust produced by the main rotor.

3. Anti-torque pedals counteract the rotational torque effect of the main rotor to maintain heading control in a hover, and maintain balanced flight while in forward motion.

4. The twist grip (throttle) has no equivalent in fixed-wing aircraft. The twist grip controls fuel flow to the engine and is used for start-up, shutdown, and to set the flight idle and full open positions. The twist grip shall be left in the full open position during flight except when executing power-off maneuvers.

The following is a discussion of each of these controls and the manner in which they are coordinated to control the helicopter.

201. CYCLIC CONTROL

The cyclic is located directly in front of the pilot and looks like a control stick in a conventional aircraft. The cyclic control is so named because it changes the pitch of the main rotor blades cyclically so as to control the attitude of the rotor disc about the longitudinal and lateral axis. Cyclic response is extremely sensitive and rapid in all flight regimes, from zero airspeed to V_{ne}. Movement of the cyclic tilts the rotor disc, directing the lift force, giving the pilot complete attitude control. Precise rotor disc attitude control must be developed by the pilot to maintain a position over the ground in a hover or to maintain a desired airspeed in forward flight. The cyclic gives pitch and roll control in forward flight much like an airplane control stick; however, it controls the rotor disc directly, not through elevators and ailerons. Angle of bank (AOB) turns

a helicopter in forward flight just like AOB turns an airplane except there is no adverse aileron yaw.

With airspeed, some control over altitude can be exercised through the cyclic by trading airspeed for altitude and vice versa; however, this is a secondary function of the cyclic control. Proper handling calls for smooth, precise, minute corrections more in the nature of pressures than movements.

Force Trim. The TH-57 incorporates a cyclic force trim system, which incorporates a magnetic brake and a force gradient spring to provide stick position trim and artificial feel. A trim button is located on the cyclic. Every pilot will have a slightly different technique for using the force trim. Generally, in a hover or any flight profile in which the cyclic is trimmed and steady, small corrections should be made around the trimmed cyclic position using it as a reference. If a new attitude is desired, or a large correction required, the cyclic position should be changed by depressing the force trim button. The proper way to use the force trim is to depress the force trim, displace the cyclic as necessary, release the force trim and make small corrections around the new trim point. Do not move the cyclic and then depress the button or a *kick* will be felt as the pressure is released. A simple mnemonic device to help reinforce a good trim technique is *"press, hold, release."*

The importance of developing a sound trim technique cannot be over emphasized. The procedures above are equally applicable to the "Charlie" model.

The following trim techniques should be avoided:

1. Not trimming.

2. Holding the trim button in continuously (the equivalent of turning off the trim).

3. "Machine gunning" (rapidly depressing the force trim button even in positions where it is not desired.)

WARNING

Do not let go of the cyclic while the rotors are turning.

How to Use the Cyclic. Rest the right forearm on your leg and grasp the cyclic grip lightly. It is important that your right forearm be supported. Your arm and hand need to be relaxed so that you can apply light, smooth pressure to the cyclic. It is the *light, smooth* pressure you apply that causes the aircraft to respond about the roll and pitch axis.

202. COLLECTIVE CONTROL

The collective pitch control is a stick located to the pilot's left, and worked by the left hand. It is so named because it controls the pitch of the main rotor blades collectively. It is rigged so that lifting the collective causes an increase in the main rotor blades' pitch angle in relation to the

main rotor hub. This gives the pilot nearly instantaneous reaction to his/her demands for increased or decreased lift. The primary function of the collective is altitude control; therefore, it becomes the engine power demand control. It is linked to the engine fuel control unit through a correlating cam and N_f governor (which indirectly maintains rotor RPM (N_r) within operating limits). Lifting the collective increases the rotor's lift and through the correlating cam and N_f governor increases engine power. Therefore, the collective is the primary torque pressure control.

An extension of this reasoning will show how various combinations of control inputs are coordinated to achieve any desired power setting. Sudden and gross movements of the collective should be avoided. Corrections are on the order of smooth *pressures***.** Little movement of collective is necessary or desirable in normal powered flight.

How to Use the Collective Pitch Control. Grasp the collective pitch control at the throttle grip with a loose yet positive grip. Every movement you make on the collective should be slow and smooth so the pedals may be coordinated with it. The collective has a friction adjustment knob to adjust the breakaway friction required to move the collective. This should be set just firm enough to hold the collective at its desired position, but not so firm as to make it difficult to move the collective.

The helicopter can be held at a constant altitude in flight by adjusting the collective pitch to a position where the aircraft is neither climbing nor descending. This position will be determined by the weight of the aircraft, the outside temperature, and many other factors, thus it will vary from day to day and from aircraft to aircraft. Raising the collective will cause the aircraft to CLIMB, and lowering the collective will cause the aircraft to DESCEND.

WARNING

Your hand shall never be removed from the collective in a hover.

203. ANTI-TORQUE PEDALS

The pedals are located on the floor of the helicopter and are similar in appearance to the rudder pedals in a conventional aircraft. However, in a helicopter, the anti-torque pedals control the pitch in the tail rotor blades. With the pedals in neutral, the tail rotor is set to have positive pitch to offset torque in stabilized forward flight. Because the main rotor turns counter-clockwise, an equal and opposite reaction from the torque turning the main rotor tends to turn the fuselage clockwise (nose to the right). Varying power and changing airspeed requires control over the anti-torque rotor to maintain a desired heading. The heading and balanced flight of the helicopter is controlled through the use of the pedals, like rudders are used in airplanes: directionally the same, though feel and response rates differ considerably.

Since any change of power setting results in a change in the torque force applied to the fuselage, the pedals *must* be coordinated with collective pitch application. Application of the pedals has a tendency to affect RPM, an increase in left pedal pressure results in an increased power requirement (greater lift and drag on the tail rotor), and decreased power requirements result from right pedal application. On the Bell Sea Ranger, the governor will compensate for the

power requirement and maintain a constant RPM. This will be represented in the cockpit by an increase in torque with left pedal input.

Remember, there is no adverse yaw in a turn in forward flight; therefore, *little pedal is* required to make *coordinated* turns. In fact, excessive use of pedals in turns will cause a noticeable skid. Pedal position required also varies with airspeed, as the tail rotor and vertical stabilizer gains efficiency through translational lift. Pedal pressures are light, and little feedback force is felt, thus proper use of the pedals calls for light movements from the ankles to maintain the desired heading.

In forward flight, proper use of the pedals trims the Sea Ranger for level, balanced flight. If the helicopter is flying in a skid or slip at an airspeed sufficient to create noticeable drag, the upwind side of the aircraft will be low, and slow continuous roll oscillations will be noticed. A little pressure on the upwind pedal (low side) will right and streamline the aircraft, making for a more efficient and comfortable ride. In an autorotation the trim of the aircraft is important, because a longer glide may be realized through streamlining; while skidding or slipping makes airspeed control difficult, and the rate of descent increases considerably. As engine torque is removed from the rotor in autorotation, the tail rotor's pitch must be decreased by applying right pedal. The proper trim of the aircraft is accomplished by feel initially, then verifying the pedal setting by consistently scanning the ball. Remember, bank turns the helicopter; the pedals are used to trim the aircraft for balanced flight. In terminating the autorotation to a touchdown, the pedals are used to align the aircraft with the direction of travel so that any ground run will be accomplished with the skids sliding in line. Good heading control is essential in all flight regimes.

How to Use the Anti-torque Pedals. To use the pedals, apply pressure smoothly and evenly by pressing with the ball of one foot. When one pedal is pushed forward, the other will come back an equal distance. Let your heels rest on the floor of the helicopter and allow them to slide along the floor if it is necessary to make large pedal movements.

When power is applied, you must use LEFT pedal to keep the helicopter from turning to the right. When power is REDUCED, you must use RIGHT pedal to compensate for the loss of torque. This is how the pedals counteract the effects of torque.

204. TWIST GRIP (THROTTLE)

The twist grip is located at the forward end of the collective pitch stick. Twist grip operation on the TH-57 is similar to earlier Bell helicopters, in that direction of travel is the same; i.e., rolling the grip away from the pilot opens the throttle, and rolling the grip toward the pilot closes the throttle. The full range of rotation of this twist grip is 90º from full-closed to full-open positions. Starting at the full-closed stop, the first 30º of travel (rolling open) puts the twist grip on top of the flight idle mechanical stop. As this stop is passed, a slight "hump" and clicking noise will be felt as the stop plunger on the top of the pilot's twist grip springs out. This stop will prevent the pilot from closing the twist grip all the way to the full-closed position, inducing engine flameout, unless the stop plunger is physically depressed and the twist grip rolled closed to the stop. This feature allows power off practice autorotations without the fear of shutting off the engine inadvertently on a throttle-chop.

In normal powered flight operations, the collective and twist grip (at full-open position) maintain a constant N_r through the use of a governor on the N_f system; which permits any collective application to add or reduce fuel flow and maintain a near-constant RPM (N_f and N_r) with blade angle changes. Thus, where it was necessary to manually increase or decrease throttle on a reciprocating engine with collective pitch changes in order to maintain a given RPM, it is now automatic in the Sea Ranger and requires no twist grip movement with collective displacements. This now brings us to three new terms:

Lag is the characteristic of the turbine engine occurring briefly when a rapid collective change is made. It is the momentary loss or gain of N_r (depending on the direction of collective movement) that occurs until the governor responds and readjusts the fuel flow to stabilize the N_r back to its original setting. Lag is a transient N_r change only.

Droop is the stabilized N_r that results from a collective pitch change in powered flight, after "lag" dissipates. Droop can be positive or negative and can be normally corrected by adjusting the correlating cam, or by governor replacement in more severe cases.

For example: If the stabilized RPM is 100% before a collective change, and is *stabilized at* 98% after a collective change and lag dissipation, this is termed negative droop. Had the RPM increased to a stabilized value above the original setting, it would be positive droop. Normal allowable droop is generally considered $\pm$ 1% at full power.

Decay occurs when the engine can no longer deliver enough power to compensate for a large collective increase. The pilot is literally dragging down N_r, and could lose lift very rapidly due to N_r "decay" or loss. Decay is not as readily recognizable in a turbine engine by audible means, as it is in a piston driven engine, so the pilot must visually monitor his/her dual tachometer and power instruments to detect this condition. Should a decay condition occur in the TH-57, it is imperative to lower the collective to maintain Nr.

Normal powered flight, as mentioned previously, is accomplished with the twist grip in the full open position. The automatic feature of the governor/fuel control selects the proper fuel flow to maintain a given RPM with any collective change, up to maximum available power. Movement of the twist grip between flight idle and full open requires smooth, slow applications to prevent excessive torque and TOT, due to added amounts of fuel being introduced into the engine combustion section at low airflow ratios.

Friction is built into the twist grip system so it should hold position anywhere within its functional range. This friction is adjusted by maintenance.

THIS PAGE INTENTIONALLY LEFT BLANK

CHAPTER THREE
BASIC MANEUVERS

300. INTRODUCTION

Basic flying techniques described in this section are generally applicable to all aircraft. The attitude-flying concept introduced and expanded upon during primary flight training, promotes learning and establishes sound learning habits. It provides for easy transition into larger, more complex aircraft and promotes smooth progression through instrument flight training in advanced helicopter training, and into operational status in an aviation unit. The mechanics and techniques of flight, correctly learned in early training, produces aviators who are highly standardized. You are encouraged to study and use the basic concepts of attitude contact flying and later attitude instrument flying. You are further encouraged to develop a working knowledge of how the aircraft components and vital systems function. With this knowledge and skill, aviators can adjust their flight performance to the requirements of future flight assignments.

The helicopter in forward flight derives its lift from the engine-driven rotor system and its control from the proper coordination of cyclic, collective, and rudders. There are no maneuvers in this manual that require abrupt or large movements of the controls. Caution should be used to avoid over controlling. The proper technique to employ is to make small, slow and smooth corrections to maintain the desired flight attitude.

301. ATTITUDE FLYING

Aircraft attitude is the position of the aircraft in relation to the horizon. Attitude is controlled about three imaginary axes: the longitudinal axis, the lateral axis, and the vertical axis (Figure 3-1). When an aircraft banks (or rolls) it changes attitude about the longitudinal axis. Attitude change about the lateral axis is called pitch and refers to raising or lowering the aircraft nose in relation to the horizon. Yaw is attitude change about the vertical axis. During flight, it is possible for an aircraft to change attitude about only one of these axes at a time. More often, however, attitude change will include movement about all three axes simultaneously.

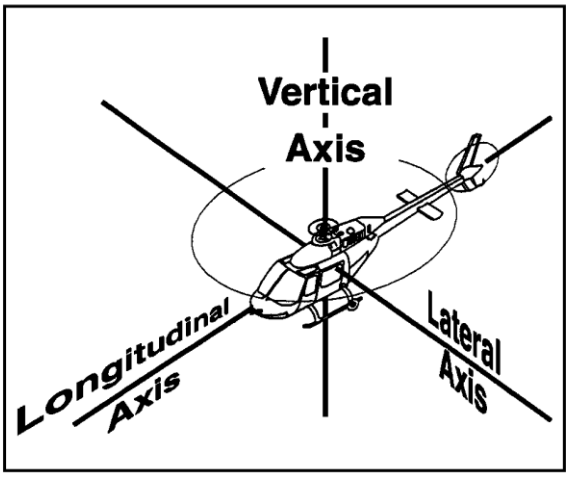

Figure 3-1 Axes About Which Aircraft Attitude is Controlled

The attitude of the aircraft in relation to the horizon and the power applied are the only two elements of control in all aircraft. Proper use of these two elements of control will produce any desired maneuver within the capability of the aircraft. Therefore, all maneuvers must be based solidly upon attitude and power control references: attitude + power = performance!

Aircraft attitude and power are modified by the pilot in two ways: one, the time of application of an attitude or power change; and two, the rate of change of an attitude or power adjustment.

Keeping the basic control elements and modifiers in mind, the aviator crosschecks for a running awareness of what the aircraft is doing at the moment. Using knowledge gained from experience, the aviator can project what the aircraft is going to do based on the power setting and attitude being maintained. Attitude and power changes are smoothly applied to cause the aircraft to perform the desired maneuver. The result is attitude flying.

302. ATTITUDE CONTROL AND AIRSPEED

Adjusting pitch attitude about the lateral axis of the aircraft controls airspeed. To hold a desired airspeed, or make properly controlled changes of airspeed, the aviator must learn the aircraft pitch attitudes resulting in acceleration, deceleration, hover, and the desired cruising airspeed. Your flight instructor will demonstrate these various attitudes.

For a given power setting, there is a pitch attitude and airspeed that will maintain altitude. If power is constant, an increase in airspeed (resulting from a change of pitch attitude) will cause loss of altitude. Conversely, a reduction of airspeed with power constant will usually cause a gain of altitude.

If power is increased while pitch attitude is held constant, airspeed will remain constant and a climb will result. If the power setting is decreased while pitch attitude is held constant, airspeed will remain constant and a descent will result.

303. ATTITUDE CONTROL AND COORDINATED TURNS

During coordinated flight, turns are a result of bank attitude control about the longitudinal axis of the aircraft. To hold a desired heading, the aviator must keep the rotor disc laterally level in relation to the horizon.

Turns are accomplished by banking (rolling) the aircraft about the longitudinal axis until the rotor disc is tilted laterally. Rate of turn is controlled by the degree the rotor disc is tilted. Aviators must learn to smoothly bank the aircraft to a degree of lateral tilt producing the desired rate of turn.

Stopping a turn is accomplished by smoothly rolling the aircraft level. Roll out is started before the desired heading is reached so the turn is stopped on the desired heading.

Turning flight is accomplished by changing part of the vertical lifting force (Figure 3-2 (A)) toward the horizontal. The turn produces centrifugal force that tends to move the aircraft toward

the outside of the turn (Figure 3-2 (B)). The resultant of weight and centrifugal force is outward and downward and is greater than the weight of the aircraft in Figure 3-2 (A). The resultant of weight and centrifugal force must be overcome by an addition of total lift or the aircraft will lose altitude during a turn. Figure 3-2 (C), shows an increase of total lift as a result of increased collective pitch and power. Total lift now equals the total of centrifugal force and weight, so the aircraft will turn without losing altitude.

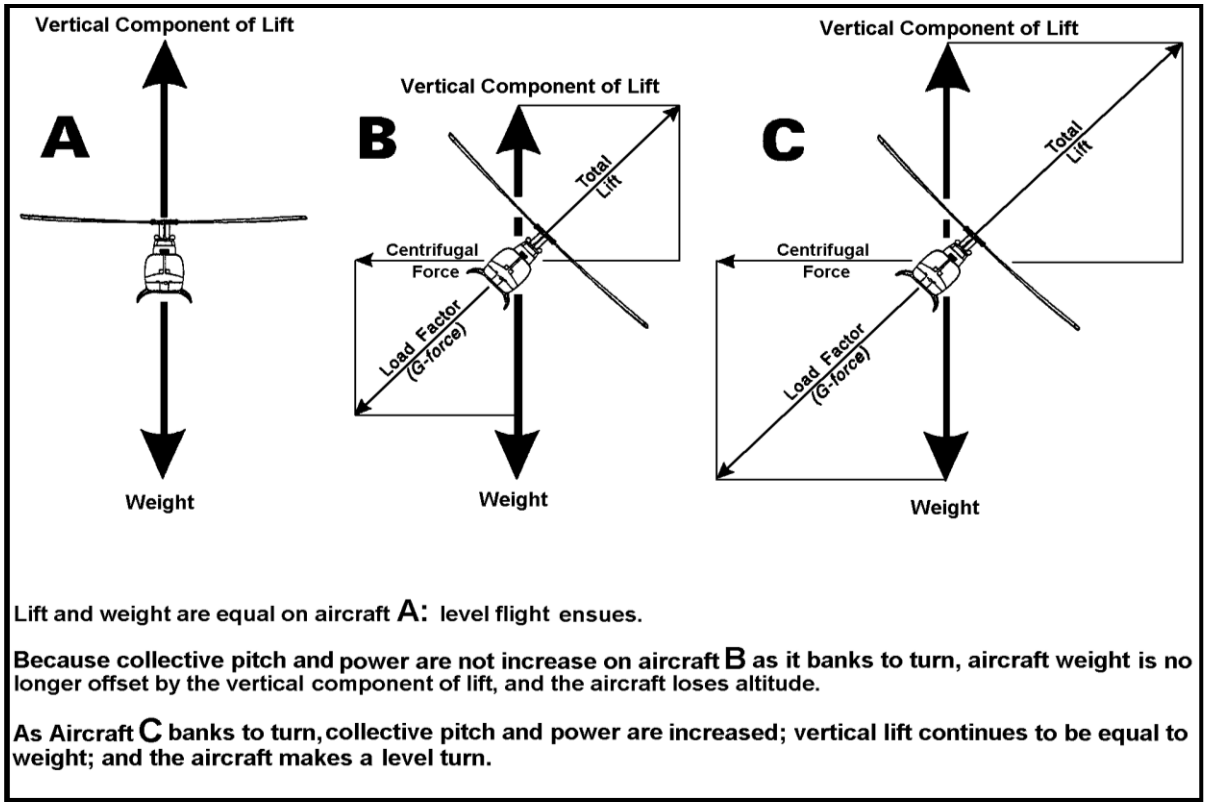

Figure 3-2 Loss of Vertical Lift During Turns

The resultant of weight and centrifugal force during turns produces an increased load factor on the aircraft. Load factor is the total load imposed on an aircraft divided by the weight of the aircraft and is expressed in G units. Load factor during a turn varies with the AOB (Figure 3-3). Airspeed during a turn does not affect load factor. For a given bank angle, the rate of turn decreases with an increase in airspeed resulting in no change of centrifugal force. Note for a 60º bank, the load factor for any aircraft is 2 Gs regardless of airspeed (Figure 3-3). This means a 10,000 lbs aircraft in a 60º bank will, in effect, exert 20,000 lbs of force on the aircraft structure. Bank angles up to 30º produce only moderate increases in load factor, which are acceptable under most flight conditions. The load factor rises at an increasing rate for banks over 30º (Figure 3-3), and may produce unacceptable disk loading depending upon the aircraft gross weight and flight conditions.

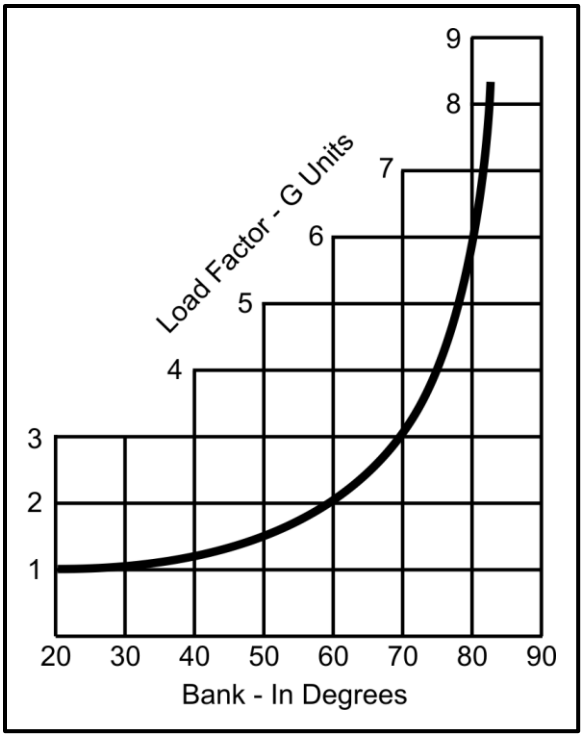

Figure 3-3 Load Factors In Various Angles of Bank During Level Turns

304. POWER CONTROL AND RESULTING ALTITUDE, CLIMB, OR DESCENT

Altitude is a result of power control. To hold a desired altitude or make changes of altitude, the aviator must apply the power settings producing the desired climb or descent when combined with the possible combinations of attitude and airspeed. Normal power settings for hover, climb, cruise, slow cruise, and descent must be used if precise control of altitude is desired. The pilot must also be able to adjust power to compensate for variation in atmospheric conditions and aircraft gross weight.

For a given attitude and airspeed, there is a power setting that will maintain altitude. If a climb is desired with a constant attitude and airspeed, power must be increased above that required to maintain altitude. If a descent is desired with constant attitude and airspeed, power must be reduced below the power required for maintaining altitude.

A constant altitude is maintained by minor pitch attitude adjustments and by power adjustments as necessary. After the altitude is stabilized and the desired airspeed is established, any deviation from altitude will result in an airspeed change while the altitude is changing. When the altitude is again stabilized, the airspeed will return to its previous indication provided the power is maintained at the previous setting. If airspeed is high due to loss of altitude, the excess airspeed may be used to return the aircraft to the desired altitude and airspeed by an upward pitch attitude adjustment. Conversely, with a gain in altitude and an accompanying loss of airspeed, the excess

altitude may be utilized by a downward pitch attitude adjustment to return the aircraft to the desired airspeed and altitude.

305. TURBULENCE AND WINDS

The air mass around you is, in fact, an ocean. It is in constant movement, both horizontally and vertically. It contains currents, waves, ripples, and calm areas. When you leave the surface of the earth, even so much as one inch, your aircraft moves with the air mass - both horizontally and vertically. Let us assume you are in forward flight at an airspeed of 50 KIAS, and you have a direct crosswind from your right blowing at 15 KTS. At the end of one hour, you will have covered a distance over the ground of 50 NM, but you will have also drifted 15 NM to the left of your course. In other words, you have been moving slightly sideways during your entire flight. This movement is known as drifting.

You can use drifting to your advantage, however; to ensure you fly a straight ground track to where you want to go, simply turn the nose of the aircraft slightly into the wind, as the aircraft drifts, it moves along a ground track taking you directly to your destination (rather than 15 miles to the left of it). This procedure is known as crabbing.

The other direction of movement the helicopter will be subject to is vertical movement. Like waves in the ocean, the air mass moves in a vertical direction. This is caused by a number of factors and is commonly known as turbulence. Turbulence can range from a slight rocking of the aircraft to a jolting so severe it can cause damage to the helicopter. Because of the light weight of a training helicopter, you will feel the effects of light turbulence nearly every time you fly. This is quite natural, and it is absolutely no cause for concern.

The turbulence you feel will also cause slight attitude and altitude changes of the helicopter as it moves through the air. You must take the necessary control movement to maintain altitude and airspeed, but you should never try to “fight” turbulence, as it leads to over controlling the aircraft.

306. CROSSWIND CORRECTIONS

Crab Correction. A crab correction is used to counteract the effect of a crosswind at altitude. It is a condition of flight in which the nose of the helicopter is turned into the wind as necessary to maintain a desired ground track. Anti-torque pedals are used to keep the ball in the center. Because of the comparatively low velocities of helicopters, large drift corrections are often necessary to compensate for crosswinds. Crab angles in excess of 20º are common. Do not try to point the nose in the direction of travel in a crosswind. In crabbing, the aircraft is laterally level and is in a balanced flight condition.

Wing Down, Top Rudder Crosswind Correction. After entering an approach maneuver from pattern altitude and airspeed or cruise flight, the wing down, top rudder correction will be used to counter crosswind conditions. When aligned into the course line on final approach, lower the wing (rotor disk) into the wind and use the opposite (top) rudder (pedal) to maintain the nose of the helicopter in alignment with the course line. In this condition, the aircraft is not laterally

level and is not in balanced flight condition. Point the nose directly toward intended point of landing with pedals, and wing down as necessary to prevent drift.

307. SCAN

The Integrated Technique Of Flight Instruction. Integrated flight instruction during the Contact (B) phase teaches the student to perform flight maneuvers primarily by outside visual references with secondary reference to flight instruments. **From the first time the maneuver is introduced,** no distinction in the pilot's operation of the flight controls is made, regardless of whether outside references or instrument indications are used for the performance of the maneuver. Thus, the control of a helicopter by outside visual references is integrated with instruction in the use of flight instrument indications for the same maneuver to be performed.

Control changes required to produce a given attitude by reference to the horizon in VFR flight are identical to those used in instrument flight, and the pilot's thought processes are the same.

The basic method for presenting attitude instrument flying groups the instruments as they relate to control function as well as aircraft performance. All maneuvers involve some degree of motion about the lateral (pitch), longitudinal (bank/roll), and vertical (yaw) axes. Attitude control is stressed in terms of pitch, bank, power, and trim control. Instruments are grouped as they relate to control function and aircraft performance as follows:

1. **Power Instruments**

    a. Torque Gauge

    b. Airspeed Indicator

2. **Pitch Instruments**

    a. Attitude Indicator

    b. Altimeter

    c. Airspeed Indicator

    d. Vertical Speed Indicator

    e. Radar Altimeter

3. **Bank Instruments**

    a. Attitude Indicator

    b. RMI

    c. Turn Needle and Ball

3-6 BASIC MANEUVERS

During VFR flight, the majority of the pilot's attention is directed outside the cockpit, as the pilot scans for attitude in relation to the horizon in addition to traffic lookout and avoidance. Student pilots who have been required to perform all normal flight maneuvers by outside reference as well as reference to instruments will develop, from the start, the habit of continuously monitoring their own and the helicopter's performance. Consider the following example: While flying downwind in the pattern, the horizon is maintained at a given level across the windscreen with constant power, airspeed, altitude, and a zero climb/descent rate on the VSI. Due to a slight increase in tension in the pilot's arm, the cyclic control is inadvertently pulled aft. The pitch attitude starts to deviate high and the windscreen fills with sky, the altimeter shows an increase in altitude, airspeed bleeds off, and the VSI shows a positive rate of climb. With the integrated scan, the pilot recognizes these changes and eases the cyclic forward to return the nose attitude to its proper relationship to the horizon and all instrument indications back to desired parameters.

THIS PAGE INTENTIONALLY LEFT BLANK

CHAPTER FOUR
FLIGHT TRAINING MANEUVERS - LOW WORK

400. INTRODUCTION

This section focuses on the basic maneuvers of powered flight. These maneuvers form the foundation of the skills required of a helicopter pilot. Follow-on stages of the syllabus will build on these skills and require greater precision. It is imperative you develop a keen knowledge of the procedures and an almost effortless ability to execute the maneuvers contained in this section.

The first maneuvers discussed will become second nature to you as a helicopter pilot. After your first SOLO flight these maneuvers will be observed and graded as "LOW WORK." It will be expected that the Student Military Aviator (SMA) will have a degree of skill that will provide for safe maneuvering of the helicopter in close proximity to the ground. Remain ever vigilant when you are at the controls at or near the ground.

401. VERTICAL TAKEOFF

Maneuver Description. A vertical takeoff enables the pilot to transition from the ground to a hover.

Application. A vertical takeoff can be accomplished whenever the helicopter is capable of hovering with the skids three to ten feet above the ground. The vertical takeoff is the most common type of takeoff and should be used whenever possible. The helicopter is lifted from the ground vertically to a height of approximately five feet measured from the skids to the ground.

Procedures

1. Trim the controls in the neutral position. Establish the hover scan and smoothly raise the collective until light on the skids. Stabilize momentarily, trim out control pressures.

2. Smoothly raise the collective. As the helicopter leaves the ground, eliminate drift with cyclic, and maintain a constant heading with the pedals.

3. Continue to raise the collective until reaching hover altitude. Trim out control pressures.

NOTE

> In a no-wind condition, it will be necessary to displace the cyclic to the left to overcome the anti-torque thrust from the tail rotor and prevent the aircraft from drifting right. Because of this, the helo will take off right skid first and land left skid first.

Recommended Verbal Procedures

Takeoff check between maneuvers before lifting:

"TWIST GRIP IS FULL OPEN" = ensure the twist grip is in the full open position

"N_f and N_r are 100%" = check N_f and N_r are 100%.

"GAUGES ARE GREEN" = take the time to ensure all gauges are in the normal operation range.

"FUEL IS _____ GALLONS" = check fuel load.

"CAUTION PANEL IS CLEAN" = check for caution lights.

"CLEAR, LEFT, RIGHT AND ABOVE" = clear the aircraft before lifting.
After clearing turn, PAC should have PNAC re-verify checks before transitioning to forward flight.

Amplification

1. Before takeoff to a hover, check carefully for any nearby obstructions forward, rearward, and to the sides. It is important to maintain a *constant heading* when departing the ground. Line up with an object near the helicopter and one farther away and direct your attention to the front of the aircraft.

2. Neutralize the controls, collective full down, ensure the twist grip is full open, RPM 100%, and establish the hover scan.

3. Apply smooth, slow, upward pressure on the collective pitch until light on the skids. At this point, trim out control pressures.

4. Once the helicopter is light on the skids, it may tend to drift and turn to the right. Hold the collective constant at this point and stop any tendency to drift with cyclic. A slight adjustment on the antitorque pedals will be necessary to maintain heading.

NOTE

You are in a transition to flight at this point and very susceptible to wind gusts.

5. With your hover scan still established, smoothly apply upward pressure to the collective until the aircraft leaves the ground. Maintain your position over the ground with cyclic and maintain aircraft heading with antitorque pedals.

6. Upon reaching an altitude of five feet, stabilize and trim out control pressures. Use the hover scan to obtain the level attitude and maintain it. Depress the force trim to trim the cyclic to the level attitude. Use slight pressures against the trimmed position to maintain a stable hover.

7. You are airborne, though still close to the ground. As in any type of flying, your attitude is of primary importance, and especially since, you are so near the ground. Stop the aircraft at five feet, clear of the ground with the collective and control your attitude with light cyclic pressures using the horizon as your reference. Think of the whole windshield as a large attitude indicator. If you look too close in, you will not have fine control of your attitude. Your peripheral vision gives you depth perception and detects small movements of the aircraft. Heading control is natural if you are looking toward the horizon, because any small heading drift is immediately apparent.

8. Use pressures and small (very small) movements of the controls to maintain attitude, heading, and altitude. The key with helicopters is small, precise application of pressures and movements as necessary. Position over the ground is accomplished by making fine attitude changes, not by gross control movements put in and then taken out. This large inputs usually only rocks the helicopter and upsets the passengers (and your instructor!).

9. Altitude control follows the same rule - take it easy! Smooth collective pressures will get you what you want. Use your peripheral vision for attitude reference. Close to the ground, and with little or no groundspeed, your attitude is very important; so look away toward the horizon.

10. Do not taxi, take off, or land when an aircraft in an adjacent spot is starting or is at a very low N_r during shutdown.

11. The pilot shall check the caution panel and instruments prior to every vertical takeoff.

Common Errors and Safety Notes

1. Failure to maintain heading.

2. Erratic ascent due to improper collective control applications.

3. Allowing helicopter to drift.

4. Allowing excessive roll during liftoff. Lateral cyclic inputs creating drift can lead to dynamic rollover.

402. HOVER

Maneuver Description. Hovering is a maneuver in which the helicopter is maintained in nearly motionless flight over a reference point with constant heading and altitude.

Application. Hovering is the unique flight characteristic giving the helicopter its versatility and capability, and the maneuver used to perform the majority of helicopter missions.

Procedures

1. Use pedals to maintain heading, collective to maintain altitude (five feet), and cyclic to maintain a position over a reference point.

2. Scan "out" for heading and attitude, "down" for altitude and drift, and "in" for N_r, and engine instruments.

Amplification and Technique

1. This maneuver requires a high degree of concentration and coordination. When hovering, keep the helicopter over a spot by using the cyclic control stick, and maintain altitude by the use of collective. A constant heading is kept by use of antitorque pedals. Only by the proper coordination of all controls can you achieve successful hovering flight.

2. All control corrections should be small pressure changes rather than abrupt movements. This is necessary to prevent over controlling which is the most common fault of the new helicopter pilot when learning to hover. Abrupt and erratic cyclic movements will make a stable hover impossible. A relatively constant collective (power) setting will enable smoother yaw and cyclic corrections. A hover altitude of five feet (skid height above the ground) is utilized to provide approximately six feet of tail stinger to ground clearance and ample tail rotor clearance for maneuvering at hovering and taxiing altitude.

3. To maintain a hover over a point, you should look for small changes in the helicopter's attitude and altitude. When you note these changes, make the necessary control inputs before the helicopter starts to move from the point. To detect small variations in altitude or position, your main area of visual attention needs to be some distance from the aircraft, using various points on the helicopter or the tip-path plane as a reference. Looking too close or looking down leads to over controlling. Obviously, in order to remain over a certain point, you should know where the point is, but your attention should not be focused there.

Common Errors and Safety Notes

1. Allowing excessive nose high attitudes at low altitude.

2. Over controlling, i.e., larger inputs, than necessary.

3. Looking through the chin bubble or "staring" rather than the "out, down, and in" scan.

4. Failure to maintain altitude.

5. Failure to maintain position over a reference point.

6. Failure to maintain heading.

7. Inadvertently rolling twist grip partially off.

4-4 FLIGHT TRAINING MANEUVERS – LOW WORK

8. Too tense on controls.

9. Do not allow excessive nose high attitudes at low altitudes because the tail rotor may impact the ground.

10. When first learning to hover, stress the out and down scan, vice out, down, and in.

403. VERTICAL LANDING

Maneuver Description. A vertical landing enables the pilot to land from a hover.

Application. Land the helicopter by maintaining the hover attitude and smoothly lowering the collective until the skids come into contact with the ground and the weight is smoothly transferred from the rotor to the skids.

Procedures

1. Smoothly lower the collective to begin a slow rate of descent.

2. Use pedals to maintain heading and cyclic to eliminate drift.

3. The rate of descent may slow or stop as the helicopter nears the ground. Continue the descent with slight collective pressure.

4. When on the ground, smoothly lower the collective to the full down position.

NOTE

In a no-wind condition, it will be necessary to displace the cyclic to the left to overcome the anti-torque thrust from the tail rotor and prevent the aircraft from drifting right. Because of this, the helo will take off right skid first and land left skid first.

Amplification and Technique

1. The pilot should stay as relaxed as possible. Make smooth and timely corrections.

2. With the helicopter stabilized in a five-foot hover and heading into the wind, begin a slow rate of descent by applying slight downward pressure on the collective. As the aircraft descends, adjust antitorque pedals as necessary to maintain heading and adjust the cyclic to eliminate any drift. If you have the correct attitude, the helicopter will not drift, so constantly correct to the proper level attitude.

   a. The rate of descent will tend to slow or stop as the helicopter approaches the ground. This tendency is due to the increased influence of ground effect with the decrease in distance between the rotor system and the ground.

b. Do not over control the cyclic at this point; maintain the "out" portion of your scan. Continue the descent with slight downward collective pressure, and the helicopter will move through this ground effect until ground contact is made.

c. When the skids touch the ground, lower the collective smoothly to the full down position, and adjust cyclic as necessary to prevent any tendency to drift as the skid gear conforms to the ground plane. Apply antitorque pedal as necessary to maintain heading.

3. Constantly cross check all visual reference points. Hover the helicopter by maintaining a constant attitude. Fly by PRESSURES on the controls and not a movement of the controls. A series of small corrections are better than one large correction. Do not attempt to lower the collective rapidly after the skids are on the ground. The landing is not complete until the collective is fully down.

Common Errors and Safety Notes

1. Over controlling collective pitch control.

2. Improper use of cyclic control, allowing aircraft to slide over the ground after contact.

3. Improper use of antitorque pedals, allowing the nose of the aircraft to yaw.

4. Avoid landing the helicopter with any drift. Lateral drift on touchdown can lead to dynamic rollover. Rearward drift can result in tail rotor strike. Forward drift is not desired.

5. Failure to maintain the hover scan; i.e., allowing scan to come in too close to the aircraft and staring through the chin bubble.

6. "Feeling" for the ground with collective. Remember, every landing should be a surprise.

7. Anticipating ground contact and lowering collective too quickly, resulting in a firm landing. Remember, if you have done it right, you will barely feel it.

404. TURN ON THE SPOT/CLEARING TURN

Maneuver Description. A turn on the spot is a maneuver in which the helicopter is rotated about its vertical axis while maintaining a position over a reference point.

Application. Turns on the spot and clearing turns enable the pilot to clear the area prior to each takeoff, to change the direction of taxi, and to improve his/her control coordination.

Procedures

1. From a hover, begin a slow turn by displacing the appropriate pedal.

2. As the helicopter turns, adjust the cyclic as necessary to remain over the reference point and pedals as necessary to control the rate of turn.

3. Stop the turn on the desired new heading.

Crew Resource Management

PAC initiates aircraft clearing procedure (Situational Awareness)

Amplification and Technique

In a hover, you are fully airborne, five feet above ground; therefore, completely under the influence of the wind, gusts, and turbulence associated with flight. For instance, if the wind velocity is 15 KTS on your nose and you wish to remain over a selected spot, you must tilt the rotor disc into the wind enough to equalize the drag on the helicopter; you are flying forward at 15 KTS relative to the wind. If you turn the helicopter's tail into the wind, you must fly backwards at 15 KTS relative to the wind to remain over your selected spot. The turn is accomplished with pedals; however, the cyclic needs some explanation first. Simply stated, the problem is to keep the cyclic into the wind enough to balance the thrust of the rotor against the force of the wind. Figures 4-1 through 4-3 show the cyclic roughly parallels the lift vector of the rotor; therefore, a rule-of-thumb is that the resultant lift of your main rotor could be considered an extension of the cyclic grip which you constantly hold in your right hand, so it is good constant reference. Now, as the aircraft turns through an through an arc, you can see the tilt of the cyclic must turn through an arc also, at the same rate the aircraft turns, but opposite direction. From above, it would look something like Figure 4-4.

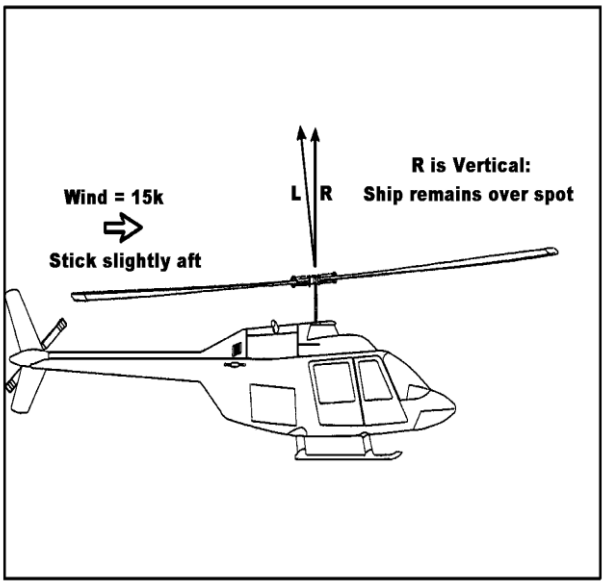

Figure 4-1 Effect of Wind on The Lift Vectors

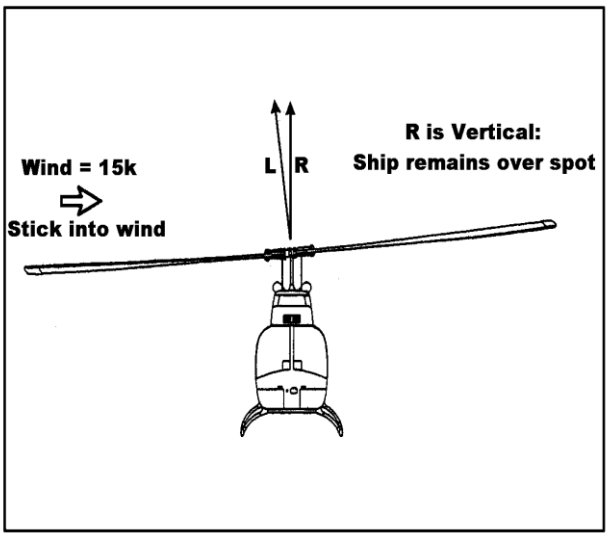

Figure 4-2 Effect of Wind on The Lift Vectors

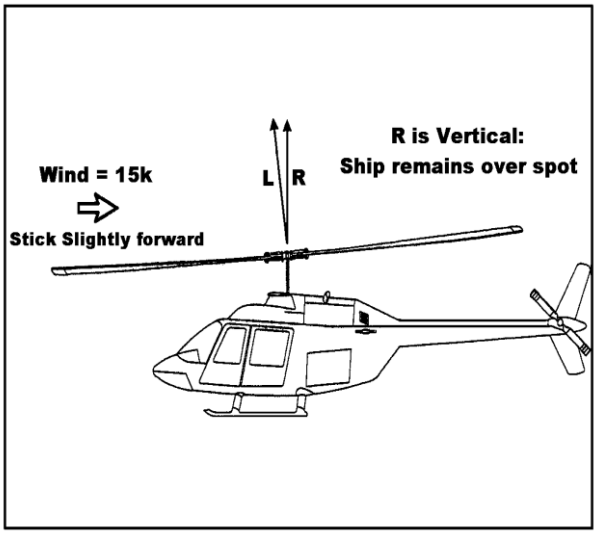

Figure 4-3 Effect of Wind on The Lift Vectors

It will take some practice to master this maneuver. The important thing to remember is the helicopter's attitude must be kept constant and level. You will notice, to remain stationary over a point, the attitude of the helicopter is nearly the same regardless of the wind's direction. The rotor disc is tilted into the wind but the fuselage is hanging nearly level. From your point of view, the horizon should cut through the windshield at approximately the same level all the way around in a hovering turn.

Pedal control in a hovering turn is relatively simple. Direction of turn and rate of turn are controlled directly by the pedals. A good technique is to clear the area visually for your turn,

then look ahead toward the horizon before you start the turn. Accomplish the turn by applying pedal pressure in the direction desired, lightly and smoothly, with both feet on the pedals to prevent over controlling. Pressures are very light and the aircraft is responsive. Constant small changes in pressures are usually required to regulate the rate of turn, which is affected by the wind as in Figure 4-4.

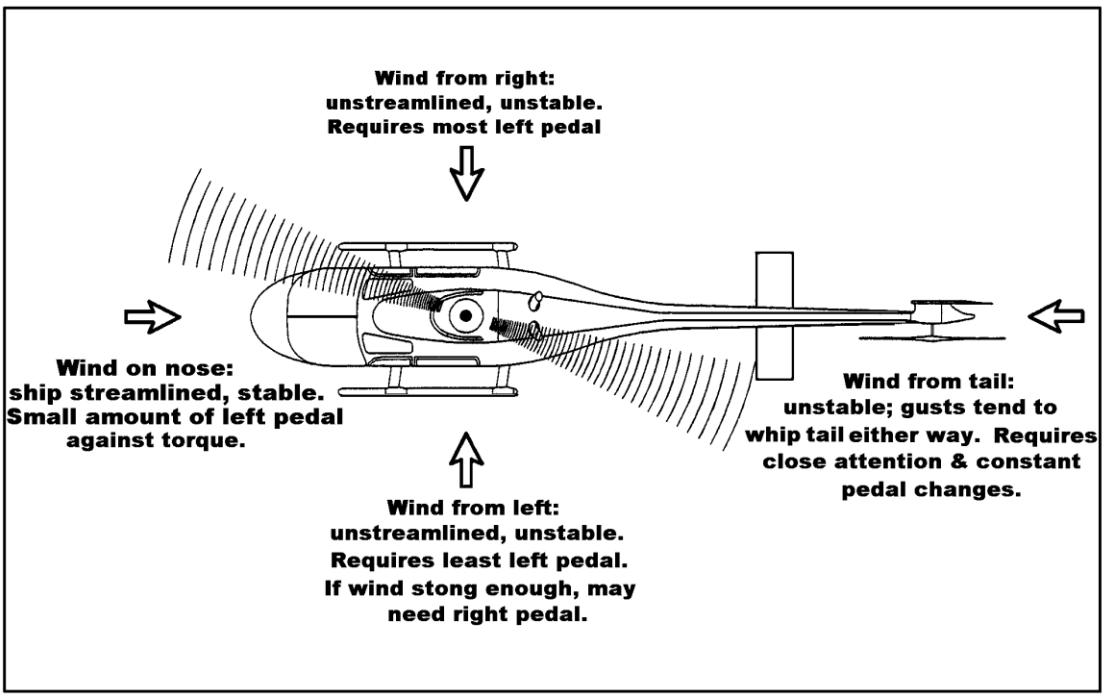

Figure 4-4 Effect of Wind on Rate of Turn

Remember to look ahead toward the horizon to control attitude and rate of turn, keeping the horizon traveling through the same level on the windshield. Make small corrections in the attitude, as necessary, to hold your position over the ground.

Do not rush the maneuver.

NOTE

As the tail of the helicopter passes through the wind line, the rate of turn will increase and the nose will tend to tuck. Utilize pedals and cyclic as necessary to control the rate of turn and prevent drift.

When the wind exceeds 15 KTS avoid turning more than 90º from the wind line if possible.

This maneuver will take practice to master, but the more thinking and planning you put into it, the better you will understand the forces at work on the helicopter, and the smoother and more controlled your performance will be.

To make a 45º clearing turn, stabilize the helicopter completely after finishing either a 45º turn on the spot left and right of course line. Clear yourself of other traffic. A full 360º clearing turn is performed in the same manner as the 45º turn, with additional emphasis placed on maintaining a constant five-foot hover and consistent rate of turn. Utilize the normal hover scan.

Common Errors and Safety Notes

1. Allowing altitude to change.

2. Drifting.

3. Excessive rate of turn.

4. Maximum winds for 360º turns on the spot are 15 KTS from any quadrant. However, high density altitude significantly influences demand on the tail rotor as a result of increased demand on the main rotor. Consult the NATOPS Manual for current wind limitations.

5. A common error is to rotate about the pilot’s seat instead of rotating about the aircraft's vertical axis.

405. HOVER TAXI/AIR TAXI

Maneuver Description. Hover taxi is used to describe helicopter movement conducted above the surface and in ground effect at airspeeds less than approximately 20 KTS. The actual height may vary, and some helicopters may require hover taxi above 25 feet AGL to reduce ground effect turbulence or provide clearance for cargo sling loads. Air taxi is used to describe helicopter movement conducted above the surface but normally not above 100 feet AGL. The aircraft may proceed either via hover taxi or flight at speeds more than 20 KTS. The pilot is solely responsible for selecting a safe airspeed/altitude for the operation being conducted.

Application. Hover taxiing is utilized extensively to maneuver the aircraft from one position to another.

Procedures

1. From a hover, displace the cyclic in the desired direction of movement.

2. Utilize pedals to maintain heading, collective to maintain altitude, and the cyclic to maintain the desired rate of movement.

3. Hover taxiing shall be conducted at a reasonable rate of speed such that a safe landing can be accomplished in the event of a loss of power.

Crew Resource Management

1. PAC initiates aircraft clearing procedure. (Situational Awareness)

2. PAC notifies crewmembers of the direction of travel. (Communication)

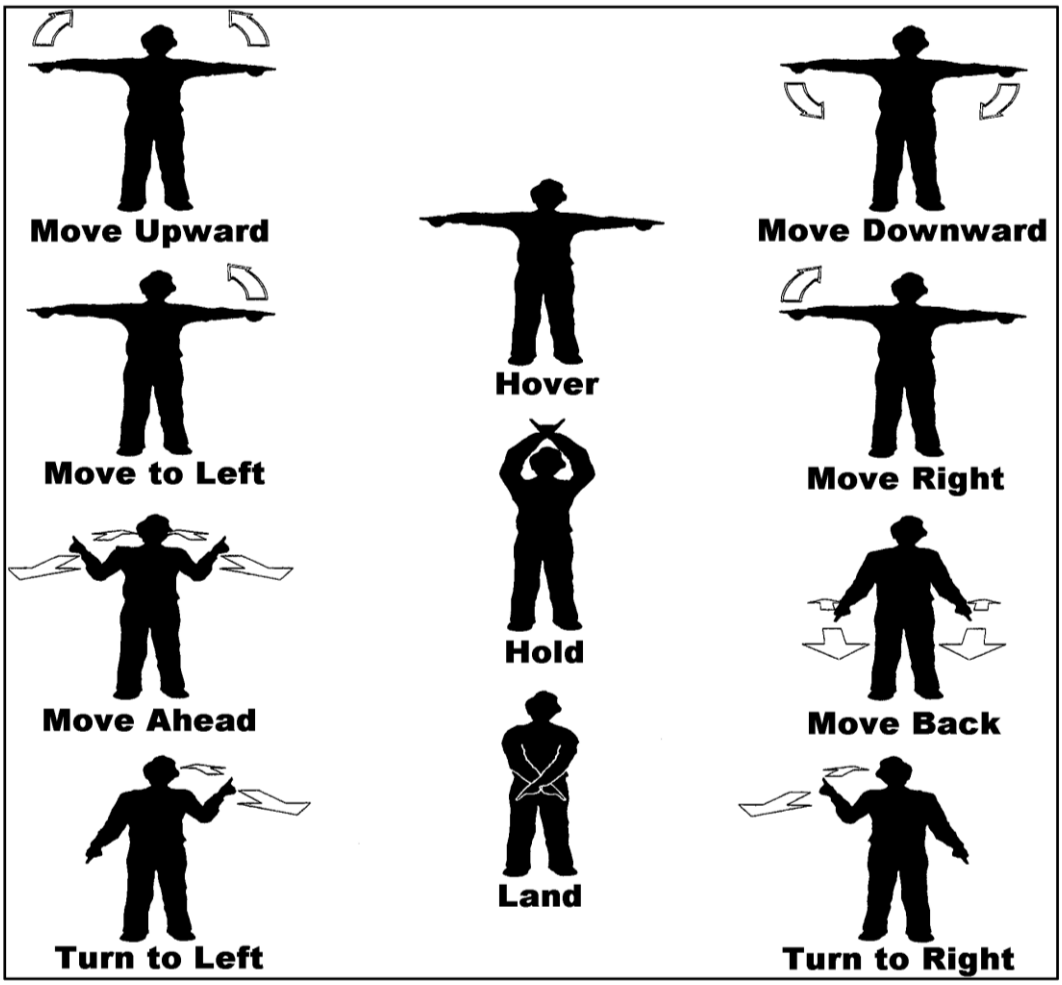

Figure 4-5 Taxi Signals

Amplification and Technique

1. From a hover, apply sufficient cyclic to establish a slow rate of movement over the ground in the desired direction of movement. Use antitorque pedals to maintain heading, collective to maintain altitude, and cyclic to maintain the desired direction of movement.

2. If you have a crosswind, apply lateral cyclic into the wind to maintain ground track.

3. A combination of collective pitch and cyclic governs starting, stopping, and rate of speed while taxiing.

4. Standard taxi signals are depicted in Figure 4-5.

5. Taxi signals are advisory only, except for “HOLD” which is mandatory. The pilot is responsible for the safe operation of the helicopter.

6. Hover taxi speeds *within the line environment* should be no faster than a man can walk.

Common Errors and Safety Notes

1. If the wind across the deck exceeds 15 KTS, turns more than 90º from the wind line should be avoided if possible. Maximum sideward airspeed is 25 KTS and 15 KTS is the maximum airspeed for rearward flight. However, the airspeed indicator is inaccurate in sideward and rearward flight and airspeed must, therefore, be estimated based on the combined effect of groundspeed and winds.

2. The minimum distance between helicopters while air taxiing is 100 feet, unless under the direction of a taxi director or engaged in formation taxi on a pre-briefed formation hop.

406. SQUARE PATTERNS

Maneuver Description. Squares are precision maneuvers performed at hover altitude utilizing references outside the cockpit.

Application. These maneuvers improve flight control coordination and the pilot's ability to perform low work operations.

Procedures

1. **Constant-Heading Square**

   a. From the starting position, move laterally in either direction along the side of the square.

   b. When reaching the corner, stop, stabilize the hover, and continue in the new direction. maintain a constant heading with pedals.

   c. When moving forward or rearward, the side of the square should be under the aircraft to provide the pilot with a visual reference.

   d. When moving laterally, the heading should be perpendicular to the side of the square.

2. **Parallel-Heading Square**

   a. From the starting position, move forward and place the side of the square under the helicopter. Turn 90º to the right to place the square beneath the longitudinal axis and begin a forward air taxi.

   b. Anticipate a hover at the corner. Stop with the next side abeam the pilot's shoulder.

c. Execute a 90º left turn on the spot to place the new side beneath the helicopter. Stabilize the hover, and continue the air taxi. Continue until reaching the middle of the downwind side. Turn 90 º and taxi rearward to the starting position.

3. **Perpendicular-Heading Square**

a. From the starting position, begin slow lateral movement in either direction along the side of the square, maintaining the heading perpendicular to the square with pedals.

b. As the helicopter reaches the corner, coordinate cyclic and rudder to turn to a heading perpendicular to the next side. Do not stop the lateral motion.

c. Continue until reaching the starting position.

Amplification and Technique

There are three types of square patterns: the constant-heading square, the parallel-heading square, and the perpendicular-heading square. All square patterns will be performed at hover altitude. All square patterns will be started in the middle of the downwind side with the heading of the helicopter perpendicular to the side of the square. The distance from the square should be sufficient to scan the side of the square over the instrument panel.

1. **Constant-Heading Square -** From the starting point, commence a slow controlled slide (left or right) by displacing the cyclic in the desired direction. Maintain a constant distance from the square. Hover momentarily at the corner of the square, and commence a slow forward taxi with the side of the square under the helicopter to provide a visual reference. Stop the helicopter with sufficient distance to scan the next side of the square over the instrument panel. Hover momentarily, and then commence a slide as before while maintaining constant-heading and altitude until the next vertical side of the square is under the helicopter. Hover momentarily and then commence a rearward taxi with the side of the square under the helicopter. Stop the helicopter with sufficient distance to scan the starting side of the square over the instrument panel. Hover momentarily, and then commence a lateral taxi back to the starting point.

2. **Parallel-Heading Square -** The helicopter is taxied forward from the starting position until the downwind side of the square is passing through the pilot's shoulders. Hover momentarily, and then execute a right turn on the spot to place the side of the square under the centerline of the helicopter. Taxi forward to the corner and turn left to parallel the next side while placing the side of the square under the centerline of the helicopter. Follow this procedure all the way around the square. When back to the original starting position, make a 90º turn and air taxi backwards to the starting point.

3. **Perpendicular-Heading Square -** From the starting point start a slow slide to the right or left while maintaining a constant distance from the square and heading perpendicular to the side of the square. As the aircraft approaches the corner of the square, coordinate pedals and cyclic to commence a turn about the nose to arrive at the next side with a heading perpendicular to the side of the square. Do not stop the lateral movement. The pilot shall keep the same distance

from the side of the square. Maintain a constant rate of lateral movement. Follow this procedure all the way around the square back to the starting point.

4. Be aware of the common tendency to get low at the corners during the turn.

5. As the tail of the helicopter passes through the wind line, the nose will tend to tuck and the rate of turn will tend to increase. BE ALERT!

6. DO NOT RUSH! Square patterns are precision maneuvers. Make small, smooth, and deliberate corrections. SCAN!

7. Parallel and perpendicular heading squares shall not be performed in winds exceeding 15 KTS.

8. Use peripheral vision to maintain position on the square and continue to scan.

Common Errors and Safety Notes

1. Taxiing too fast, rushing maneuver.

2. Failure to maintain a constant position relative to square pattern.

3. Failure to maintain position over corners during turns to parallel the next side while performing parallel heading squares.

4. Failure to maintain altitude.

5. Failure to maintain hover scan; i.e., scanning in close, staring through the chin bubble, or fixating on the box.

407. TRANSITION TO FORWARD FLIGHT

Maneuver description. The transition to forward flight enables the pilot to gain airspeed and altitude from a hover.

Application. This maneuver enables the pilot to perform a safe transition from a hover to forward flight while minimizing time spent in the caution area of the height velocity diagram. Refer to the TH-57 NATOPS Part I, Chapter 4, Height Velocity Diagram.

Procedures

1. From a stable hover, begin forward motion.

2. Add collective if necessary to prevent settling as the helicopter leaves its ground cushion. Maintain helicopter heading aligned with the direction of travel.

3. Continue to accelerate while maintaining the wing down, top rudder crosswind correction. Arrive at 20 feet AGL with 40 KIAS.

4. Passing through 50 feet and 65 KTS adjust the nose to the 70 KTS climbing attitude, transition to balanced flight, and climb at 500 to 700 feet per minute. Maintain the 70 KTS climbing attitude in balanced flight.

5. Fifty feet below the desired altitude, adjust the nose to the cruise attitude. Maintain climb power. Approaching the desired airspeed, adjust the collective to level-off at the desired altitude. Maintain balanced flight.

Crew Resource Management

1. PAC requests takeoff from Tower prior to Hold Short. (Communication)

2. PAC directs PNAC to check fuel, power, note time, and turn transponder to ALT. (Situational Awareness)

3. PAC reports "Caution panel clear, gauges green" on ICS prior to forward flight. (Situational Awareness)

Amplification and Techniques

1. In order to accomplish the maneuver, sufficient power to hover must be available, and no obstacles can be in the flight path to restrict a normal climb out.

2. A normal takeoff is executed from a five-foot hover. If at an OLF, make a clearing turn to ensure that there are no aircraft near enough to prevent a safe takeoff. Check and report the gauges green and caution lights out. Select two or more points along the intended takeoff path. These guide points will be used in maintaining the desired ground track. When taking off, proceed straight down the courseline. Do not angle or allow the helicopter to drift laterally. Be alert for other aircraft!

3. To start moving forward, apply forward pressure on the cyclic. Do not apply too much cyclic, as this will result in a nose-low attitude. With the nose too low, the helicopter will gain airspeed rapidly and tend to descend due to loss of vertical lift. When you move forward out of ground effect with calm or light wind conditions, you *may* have to increase collective pitch to maintain five feet until you reach effective translational lift. A slight settling of the helicopter occurs as you begin to move forward because a portion of the power that has been producing lift is now being used for thrust. To compensate, small up-pressure on the collective is necessary to hold your altitude.

4. As the helicopter passes through translational lift (10 to15 KTS), you will feel a considerable increase in lift and the helicopter will tend to yaw left as the main and tail rotors move into translational lift. The nose will tend to pitch up slightly due to dissymmetry of lift. Just before reaching this condition, you will be alerted to it by a moderate vibration or shudder

throughout the helicopter caused by transverse flow effect. (These terms are explained in your aero text.)

5. At this point, apply additional forward cyclic to overcome the tendency of the nose to pitch up (blowback).

6. Establish a climb with the first transition checkpoint at 20 feet AGL and 40 KIAS. Do not become excessively nose low as this will reduce the chances for a successful autorotation should engine failure occur on takeoff.

7. For wind corrections, the "wing down, top rudder" correction still applies to keep the helicopter moving straight down the courseline and to prevent drift.

8. Passing through 65 KTS and 50 feet AGL adjust the nose to the 70 KTS climbing attitude and adjust collective to establish and maintain a 500 to 700 feet per minute climb. Transition from the wing down, top rudder crosswind correction to balanced flight. If necessary, utilize a crab angle to maintain a ground track straight down the courseline. Downwind turns shall normally be executed no earlier than 70 KIAS and 200 feet AGL.

9. Fifty feet prior to level-off altitude, adjust the nose to either the 70 or 100 KTS cruise attitude. If 100 KTS is desired, maintain climb power. Approaching 100 KTS, readjust collective to stabilize at altitude. If 70 KTS is desired, then only a slight readjustment of collective is required.

Common Errors and Safety Notes

1. The pilot shall ensure there is sufficient distance to accomplish a safe, normal takeoff.

2. Rushing the initial takeoff.

3. Unnecessary increase of collective to start takeoff.

4. Poor heading control.

5. Excessive nose-low attitude on takeoff.

6. Forgetting to check the caution panel and gauges prior to transition to forward flight.

7. Starting the maneuver by increasing collective vice forward cyclic.

NOTE

For instrument takeoff climb out parameters, refer to the TH-57 Instrument Flight Training Instruction.

408. MAXIMUM LOAD TAKEOFF (SIMULATED)

Maneuver Description. The maximum load takeoff utilizes ground cushion and translational lift to become airborne when high gross weight or high-density altitude conditions make a vertical takeoff impossible.

Application. The maximum load takeoff is designed to practice the low-hover transition into forward flight when it is necessary to become airborne when operating at maximum gross weight or a high density altitude where a vertical takeoff would not be possible.

Procedures

1. Hover into the courseline at five feet, check and state the power (n_g) required to maintain a hover.

2. Make a clearing turn and land.

3. Raise the collective until the aircraft is just clear of the ground and stabilize momentarily.

4. Begin slow forward movement, remaining in ground effect.

5. Add power as necessary to prevent settling. Maintain heading with pedals.

6. When passing through translational lift, adjust the cyclic to prevent excessive climb.

7. This maneuver is complete when 40 KIAS is attained at an altitude no higher than 20 feet AGL then announce "maneuver complete."

Amplification and Technique

1. Hover into the wind at five feet and check the power (N_g) required to maintain a hover. The maximum power permitted for this maneuver simulating maximum power available for takeoff will be the power required to hover.

2. Make a clearing turn and land.

3. Check gauges and caution lights, establish hover scan.

4. Raise the collective until the aircraft is just clear of the ground and stabilize momentarily. Power required should not yet be equal to maximum power "available."

5. Begin slow forward movement with very slight forward cyclic inputs utilizing ground effect to stay airborne. Use remaining power "available" as necessary to avoid settling back to the ground. Settling will normally occur and should be anticipated.

6. Do not exceed maximum power "available." Increase power smoothly to maximum power "available" and coordinate forward cyclic to remain airborne in ground effect while accelerating.

DO NOT RUSH INTO FORWARD FLIGHT. Maintain heading with the pedals.

7. When passing through translational lift, adjust the cyclic to prevent an undesired climb and continue with the transition to forward flight remaining lower than normal and in ground effect.

8. The maneuver is considered complete when 40 KIAS is attained at an altitude no higher than 20 feet AGL.

Common Errors and Safety Notes

1. The rate of cyclic application must be slow. Too fast an application will cause the helicopter to settle to the ground.

2. Do not allow the helicopter to settle back to the ground after forward movement has begun.

3. The pilot shall maintain a constant heading during the takeoff. Maintaining directional control prevents sideslipping, which can lead to dynamic rollover while in ground contact.

4. Not accelerating through translational lift will result in marginal climb/acceleration performance.

409. NO HOVER TAKEOFF

Maneuver Description. The no hover takeoff enables the pilot to safely transition from the ground to forward flight while avoiding the dangers of white out/brown out conditions caused by loose snow or soil/sand.

Application. The no hover takeoff is an alternative to the vertical takeoff and normal transition to forward flight. It is employed during operations when takeoff visibility would be reduced due to blowing snow, soil/sand, or other particulate matter stirred up by the rotor wash generated by hover flight.

Procedures

1. In a hover, make a clearing turn and land.

2. Trim the controls in the neutral position. Establish a hover scan and smoothly raise the collective in a continuous pull not to exceed 85% torque.

3. As the helicopter leaves the ground, apply forward cyclic to begin forward motion. Maintain heading with pedals.

4. Maintain an outside visual scan and continue to accelerate, gaining airspeed to reach translational lift as soon as possible while maintaining a safe ground clearance.

5. At 40 KIAS, adjust power and intercept normal forward flight parameters.

Amplification and Technique

1. Check for any nearby obstructions prior to starting the maneuver.

2. Neutralize the controls and check collective full down. Ensure twist grip is full open, N_r at 100%, and then establish a hover scan.

3. Apply smooth, upward pressure on the collective. Do not hesitate or stop once collective pull has started until reaching maximum power "available" as rotor wash will quickly begin lifting debris into the air.

4. As the helicopter leaves the ground, apply simultaneous forward cyclic and left pedal to transition into translational lift. This ensures whiteout/brownout conditions remain behind the aircraft. Maintain heading with pedals. The rate of forward cyclic application must be slow to prevent an excessive nose low attitude and aircraft settling when in close proximity to the ground.

5. Maintain power required until reaching 40 KIAS, then reduce power and proceed with normal transition to forward flight parameters.

6. The maneuver is complete when reaching 40 KIAS.

Common Errors and Safety Notes

1. Failure to maintain heading.

2. Failure to maintain a positive and constant collective pull until reaching torque required, not to exceed 85%.

3. Failure to apply sufficient forward cyclic to stay ahead of the rotor wash.

410. NORMAL CRUISE

Maneuver Description. Normal cruise is commonly used to fly the aircraft from one point to another Normal cruise airspeed is 100 KTS.

Application. Normal cruise shall be conducted at a safe altitude and as dictated by weather, aircraft configuration and weight, terrain and obstacles, and mission requirements. Power and attitude should be adjusted to attain desired cruise airspeed. Normal cruise is determined from information in Part XI of the NATOPS Manual. Slow cruise airspeed is 70 KTS.

Procedures

1. Set the proper cruise attitude with cyclic and adjust collective as necessary to maintain altitude and airspeed.

2. Maintain balanced flight with pedals.

Amplification and Technique

1. To establish normal cruise, adjust the nose to the cruise attitude with cyclic to maintain airspeed, and adjust the collective to maintain altitude. Torque for normal cruise (100 KIAS) is typically 70-75% indicated.

2. The attitude and VSI are the primary scan items you will utilize to maintain 100 KTS normal cruise and desired altitude.

3. Maintain balanced flight with pedals and trim.

Common Errors

1. Failure to maintain the cruise attitude

2. Failure to maintain altitude.

3. Weak scan resulting in large changes in altitude.

4. Failure to maintain balanced flight.

411. CLIMBS

Maneuver description. Climbs are coordinated maneuvers designed to increase altitude.

Application. Climbs are normally accomplished when it is desired to climb from an established altitude to a selected higher altitude. There are two types of climbs: normal climb and cruise climb.

Procedures

1. **Normal Climb**

   a. Transition to the 70 KTS climb attitude.

   b. At 70 KTS, adjust collective as necessary to establish a 500 to 700 feet per minute climb, maintaining balanced flight.

   c. Fifty feet prior to the desired altitude, lower the nose to the cruise attitude. Maintain climb power.

   d. Upon reaching cruise airspeed, adjust collective to level-off at the desired altitude and maintain balanced flight.

2. **Cruise Climb**

a. Add power to establish a 500 to 700 feet per minute climb while maintaining cruise airspeed.

b. Fifty feet prior to the desired altitude, reduce power to maintain altitude. Maintain balanced flight.

Amplification and Technique

1. **Normal climb.** To establish a normal climb from cruise flight, clear the area for other aircraft, then raise the nose slightly and assume the 70 KTS climbing attitude. Upon reaching 70 KTS, increase collective to establish a 500 to 700 feet t per minute climb. Simultaneously apply left pedal to counteract torque. Fifty feet prior to the desired altitude, lower the nose to the cruise attitude. Maintain climb power. Upon reaching the desired cruise airspeed, reduce the collective and simultaneously apply right pedal to compensate for reduced torque.

2. **Cruise climb.** To establish a cruise climb from cruise flight, clear the area for other aircraft, increase collective, simultaneously adding left rudder to counteract increased torque. Ensure torque limitations are not exceeded. Maintain the cruise attitude while climbing at 100 KTS. Fifty feet prior to the desired altitude, lower the collective, simultaneously adding right pedal to counteract reduced torque. Adjust the nose attitude to maintain straight and level flight.

Common Errors

1. Failure to maintain airspeed (attitude).

2. Failure to maintain climb power.

3. Failure to make proper level-off.

4. Improper antitorque pedal coordination.

5. Climbing above desired level-off altitude.

6. Failure to scan torque.

412. NORMAL DESCENTS

Maneuver Description. Descents are coordinated maneuvers designed to decrease altitude during flight.

Application. Descents are normally accomplished when it is desired to descend from an established altitude to a selected lower altitude. A descent is performed at normal cruise airspeed, and collective pitch control is adjusted as required for a desired rate of descent.

Procedures

1. Lower the collective to establish a 700 to 1000 feet per minute rate of descent while maintaining the cruise attitude. Maintain balanced flight.

2. Fifty feet above the desired altitude, increase the collective sufficiently to level-off at the desired altitude while maintaining cruise airspeed and balanced flight.

Amplification and Technique

1. To initiate a descent from cruise flight, maintain the cruise attitude and lower the collective to establish a 700 to 1000 feet per minute rate of descent.

2. Maintain balanced flight with antitorque pedals by simultaneously adding right rudder to compensate for reduced torque.

3. Approximately 50 feet prior to reaching the desired cruising altitude, increase collective while simultaneously applying left pedal to compensate for increased torque.

Common Errors

1. Failure to maintain airspeed.

2. Descending below level-off altitude.

3. Improper antitorque pedal coordination.

413. LEVEL SPEED CHANGE/CONTACT STAGE

Maneuver Description. A level speed change enables the pilot to transition from one airspeed to another while maintaining a constant altitude and heading.

Application. Level speed changes are frequently utilized to set up for an approach or to transition to another airspeed.

Procedures

1. Establish a 100 KTS cruise flight at a given altitude at or above 500 feet.

2. Coordinate a reduction in power with aft cyclic to slow the aircraft to 70 KTS, maintaining altitude, heading and balanced flight. Stabilize momentarily at 70 KTS.

3. Coordinate an increase in power with forward cyclic to accelerate back to 100 KTS, maintaining altitude, heading, and balanced flight.

Amplification

1. This maneuver can be executed from any airspeed, but it typically is done from 100 KTS cruise flight.

2. To slow to 70 KTS, coordinate a reduction in collective power with aft cyclic to slow the aircraft. Simultaneously, add right pedal to counteract reduced torque and scan the VSI to maintain altitude.

3. Approaching 70 KTS indicated airspeed; readjust the nose to the 70 KTS level attitude. At the same time increase collective slightly to maintain altitude and add left pedal to compensate for increased torque and scan the VSI to maintain altitude.

4. To accelerate back to cruise flight, coordinate an increase in collective power with forward cyclic. Simultaneously add left pedal to counteract increased torque. Maintain altitude, heading, and balanced flight.

5. To expedite this maneuver understand and utilize expected torque values. You will begin the maneuver at 100 KIAS (70-75% Q). Remember this value. Slowing to 70 KIAS will require a reduction in torque to a value below the torque required to maintain 70 KIAS (50-55% Q). The rate of reduction is technique: the faster and greater the torque reduction, the faster you will decelerate; you will also need greater coordination with yaw control. To stabilize at 70 KIAS bring the torque to 50-55%. Remember this value, you will use it in the pattern at the OLF. To accelerate to 100 KIAS; you will need to bring the torque to a value slightly higher than your initial cruise torque setting. Again, the rate and magnitude of torque change will be technique. When you have reached 100 KIAS, reduce the torque to your cruise torque value. This maneuver is to be executed smoothly with deliberate changes in power and airspeed.

Common Errors

1. Improper antitorque pedal coordination.

2. Failure to maintain altitude.

3. Rushing the maneuver.

4. Failure to maintain balanced flight.

5. Failure to anticipate 70 KTS and to adjust the nose to the 70 KT level attitude.

6. Slow scan; failure to scan necessary instruments.

7. Using large attitude changes instead of small corrections.

414. TURN PATTERN/CONTACT STAGE

Maneuver Description. The Contact Stage turn pattern develops the pilot's skill to visually acquire a desired angle of bank and turn while simultaneously maintaining airspeed and altitude.

Application. The turn pattern is a skills development maneuver that develops the pilot's awareness of visual cues that indicate the angle of bank, the pitch attitude required to maintain airspeed, and the subtle power changes required to maintain altitude at different angles of bank.

Procedures

1. Establish 100 KTS or 70 KIAS flight at a given altitude, at or above 500 feet.

2. Initiate a turn in either direction utilizing 15° AOB for 90° of heading change. Approaching 90° of turn, reverse the turn at 15° AOB to the original heading.

3. After the second 15° AOB turn, reverse the turn and roll into a 30° AOB turn for 180° of heading change. Approaching 180° of turn, reverse the turn at 30° AOB to the original heading.

4. After the second 30° AOB turn, reverse the turn and roll into a 45° AOB turn for 360° of heading change. Approaching 360° of turn, reverse the turn at 45° AOB to the original heading.

5. After the second 45° AOB turn, roll wings level on heading, altitude, and airspeed.

Amplification and Technique

1. The reversals will begin at a point prior to the reversal heading.

2. Little or no power change is required for the 15º AOB turn, but some additional power may be required for the 30º AOB turn, and usually a definite power increase will be required to maintain altitude for the 45º AOB turn.

Common Errors and Safety Notes

1. Failure to maintain the proper AOB due to a breakdown in scan and trim techniques.

2. Failure to maintain altitude and airspeed because of a need for additional power in the steeper AOB turns.

3. Ballooning during reversal due to poor power management/scan breakdown.

4. Failure to scan VSI for climb/descent trends. Watch tendency to pull the nose up or allow it to fall during reversals.

5. Failure to keep ball centered.

415. NORMAL APPROACH

Maneuver Description. The normal approach enables the pilot to transition from cruise flight to a hover over a specific point.

Application. The normal approach is a transition maneuver which allows the helicopter to arrive simultaneously at zero groundspeed and hover altitude over a preselected spot with a maximum margin of safety. It is designed to minimize the amount of time spent in a flight envelope where the probability of a safe autorotation is questionable.

Procedures

1. Maintain 500 feet AGL, 70 KTS on Downwind.

2. At the 180º position, lower the collective and begin a descending, decelerating turn towards the courseline. Maintain balanced flight.

3. Arrive at The 90º position with 300 feet AGL and 60 KTS.

4. Intercept the courseline by 150 feet AGL, with 50 KTS, and sufficient straightaway (600 to 800 feet) to intercept the glideslope. Establish crosswind corrections as necessary.

5. At 150 feet AGL, set the appropriate decel attitude and adjust the collective to maintain a constant glideslope between 10 and 20 degrees.

6. Arrive over the spot at hover altitude, hover power, and zero groundspeed simultaneously.

Recommended Verbal Procedures

<u>Normal Approach (at the abeam position)</u>:

"POWER" = reduce power to begin a 500-700 fpm descent.

"PEDAL" = apply right pedal to keep the aircraft in trim.

"PAUSE" = pause momentarily to check the aircraft in a 500-700 fpm descent.

"TRIM" = use pedals to center the ball and cyclic and trim to ensure aircraft is in balanced flight.

"TURN" = clear the aircraft left and right, and then begin the descending, decelerating turn.

Crew Resource Management

1. PAC notifies aircrew of approach and landing intentions. (Communication)

2. PAC requests landing clearance in a timely manner, as required. (Situational Awareness)

3. PAC ensures Landing Checklist is completed prior to pattern entry. (Situational Awareness)

Amplification and Technique

1. It is important the helicopter be properly established at the 180º position directly abeam the intended point of landing at 70 KTS and 500 feet AGL. Begin a descending decelerating turn with collective and maintain balanced flight (i.e., power, pedal, pause). 25 to 30% torque makes for nearly a 500 fpm rate of descent. Adjust the angle of bank and rate of descent to arrive at the 90º position with 300 feet AGL and 60 KTS. At the 90º position, the glideslope and rate of closure visual cues should be acquired.

2. A normal approach intercepts the courseline/glideslope between 150 and 200 feet AGL, 50 KTS, and 600 to 800 feet of straightaway. On final, set the appropriate deceleration attitude and adjust the collective to maintain constant glideslope between 10 and 20 degrees. Upon intercepting the courseline, establish a "wing down, top rudder" crosswind correction as required.

3. During the last portion of the approach, the aircraft may tend to descend below the desired glide slope. If this occurs, an increase in collective is required to prevent landing short. As power is increased, you will need to begin applying left pedal against the increased torque.

4. As the helicopter transitions to a hover, slight forward cyclic may be necessary to counteract pendulum effect (un-commanded nose-up tendency). Terminate the approach in a level attitude with no forward motion, five feet above the intended point of landing.

5. The amount of deceleration required to establish the helicopter on the glideslope will vary from day to day depending upon wind, temperature, and gross weight of the aircraft. The airspeed required to maintain the proper rate of closure will vary with wind velocity. However, for a given set of conditions, the deceleration attitude remains essentially constant. Do not over control the cyclic. The object is to always fly the "same" approach profile by compensating for changing conditions. Your instructor will demonstrate the sight picture. Take note of relative position of the horizon and the instrument panel. The best way to visualize the proper sight picture is to compare outside reference points to fixed points on the windscreen and/or the instrument panel. The actual sight picture will depend on your sitting height but you will quickly learn what the correct sight picture is for you. The sight picture will not be accurate if the helicopter is not in the proper attitude, and the result will be an improper approach profile.

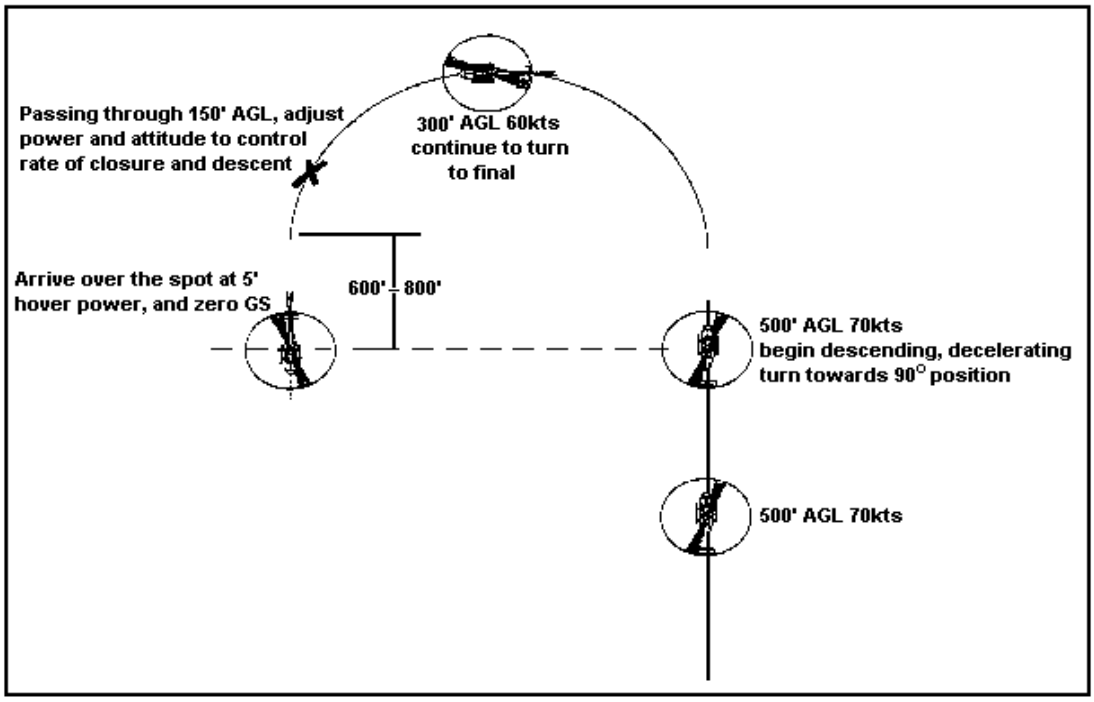

Figure 4-6 Normal Approach

6. The pilot must anticipate the glideslope and **simultaneously** reduce the collective, add right rudder, and raise the nose smoothly. An excessively slow collective reduction will result in the helicopter getting steep on the glideslope. Once the helicopter is established on the glideslope, use power to control the glideslope.

7. On final, a crosswind correction may be necessary. The proper scan to maintain the glideslope on final should be out for attitude and line-up and down for closure rate and descent rate. The pilot must control the rate of descent and rate of closure in relation to the intended point of landing. Use limited cyclic inputs to control the rate of closure and collective to establish a rate of descent such that the HELO will arrive at hover altitude over the intended point of landing. Abrupt, incorrect or uncoordinated cyclic and collective inputs may cause ballooning, sinking, or stair stepping on the approach glideslope. As the helicopter decelerates out of translational lift the nose has a tendency to pitch up. This is commonly referred to as "pendulum effect." The uncommanded nose up tendency is caused by the combination of increased collective blade pitch (as the helicopter transitions to a hover from a decelerating glideslope as in the normal approach) and dissymmetry of lift between the advancing blade (which is still in effective translational lift) and the retreating blade (which is no longer in translational lift). The dissymmetry of lift is generated at the 90/270º position, but due to phase lag this uneven production of lift is felt as a nose pitchup. The advancing blade produces more lift, which causes it to flap up relative to the retreating which is blade flapping down. The exact same effect takes place as the helicopter transitions to forward flight and enters translational lift. This is commonly referred to as rotor "blowback," and can be handled nicely with slight forward cyclic inputs to counter the pitchup tendency.

8. Termination of a normal approach is also an important aspect of the approach. The normal approach is not completed until the helicopter is established either in a hover or no-hover landing with the spot directly under the CENTER of the helicopter. DO NOT neglect the directional control pedals. Anticipate LEFT rudder correction as power is applied, or the helicopter will terminate with the nose rotating right of the courseline as torque is increased.

Common Errors and Safety Notes

1. Avoid any prolonged delays after reaching the 180° (abeam) position prior to initiating the descending decelerating turn to final.

2. Maintain a constant track from the interception of the courseline through termination of the approach, and do not angle to the spot or drift off centerline.

3. Avoid the common error of withholding collective application until the helicopter is too close to the intended point of landing. When power is applied abruptly, torque increases rapidly, and yaw control is more difficult. AVOID ABRUPT POWER CHANGES!

4. Do not allow the helicopter to become excessively nose high at low altitude as the tail rotor may strike the ground.

5. Should the angle of descent become uncomfortable, initiate a waveoff.

416. MODIFIED NORMAL APPROACH

Maneuver Description. The modified normal approach enables the pilot to transition from the instrument approach (Minimum Decision Altitude (MDA) or Decision Height (DH)) to a hover over a specific point.

Application. The modified normal approach is a transition maneuver which allows the helicopter to intercept the normal approach profile from the instrument approach at 90 KIAS and arrive simultaneously at zero groundspeed and hover altitude over a preselected spot with a maximum margin of safety. It is designed to minimize the amount of time spent in a flight envelope where the probability of a safe autorotation is questionable.

Procedures

1. Determine landing point and decelerate as necessary.

2. Intercept normal approach profile and execute normal approach procedures.

Crew Resource Management

1. PAC notifies aircrew of approach and landing intentions. (Communication)

2. PAC requests landing clearance in a timely manner, as required. (Situational Awareness)

3. PAC ensures Landing Checklist is completed prior to pattern entry. (Situational Awareness)

Amplification and Technique

1. The helicopter is transitioning from IMC at 90 KIAS when the airport environment is reported "in sight." The modified normal approach could be a straight-in or circling approach to the runway or helicopter landing areas. Therefore, the transition altitude can vary from 200 feet AGL to greater than 500 feet AGL. The initial decision is critical to position the helicopter for the normal approach profile for landing.

2. Determine where the helicopter will intersect the normal approach profile and adjust airspeed and altitude to continue the normal approach parameters for landing.

Common Errors and Safety Notes

1. Not making timely landing decision.

2. Not making appropriate control inputs to intercept the normal approach profile.

417. STEEP APPROACH

Maneuver Description. The steep approach is accomplished at a higher glideslope angle enabling a pilot to land in a confined area or to clear obstacles along the approach path.

Application. The steep approach is a power-controlled approach used when obstacles surround the intended point of landing preventing a normal approach glideslope or when a less dynamic, more closely controlled approach is required. The techniques of utilizing power and cyclic coordination to effect a precision descent will be used again in the confined area landing.

Procedures

1. Maintain 500 feet, 70 KTS in the downwind.

2. Slightly beyond the 180º position lower the collective and begin a descending, decelerating turn towards the 90° position.

3. Arrive at the 90º position at 300 feet AGL and 60 KTS.

4. Stop the descent at 300 feet AGL and intercept the courseline prior to the glide slope with 300 feet AGL and 45 KTS. Establish crosswind corrections as necessary.

5. Upon intercepting a 25 to 45 degree glide slope, lower the collective to initiate a positive rate of descent. Maintain the glideslope.

6. Terminate the approach in a hover or no-hover landing.

Recommended Verbal Procedures

Steep Approach (at the abeam position):

"THOUSAND ONE, THOUSAND TWO,…" = utilize a five count at abeam to allow longer final.

"POWER" = reduce power to begin a 500 – 700 fpm descent.

"PEDAL" = apply right pedal to keep the aircraft in trim.

"PAUSE" = pause momentarily to check the aircraft in a 500 - 700 fpm descent.

"TRIM" = use pedals to center the ball and cyclic and trim to ensure aircraft is in balanced flight.

"TURN" = clear the aircraft left and right, and then begin the descending, decelerating turn.

Amplification and Technique

1. As in the normal approach, the pilot must anticipate the glideslope. After intercepting the final courseline with approximately 800 to 1000 feet of straightaway, the minimum acceptable glideslope of 25º will be reached at approximately 550 feet from the intended point of landing. Similarly, the maximum acceptable glideslope of 45º will be reached approximately 300 feet from the intended point of landing.

2. The amount of deceleration required to establish the helicopter on the glideslope will vary from day to day depending primarily on prevailing winds. The base altitude of 300 feet AGL will be maintained until intercepting the 25 to 45 degree precision approach path.

3. Coordination between the cyclic and the collective will keep the helicopter on the glideslope. Generally speaking, for any glideslope, the faster you approach the spot (rate of closure) the faster you must descend (rate of descent). The groundspeed is controlled with nose attitude and the rate of descent is controlled with the collective pitch control. Maintain a rate of closure such that excessive control inputs to stay on the glideslope can be avoided. Large control inputs close to the ground are undesirable, unnecessary, and can be dangerous.

Common Errors and Safety Notes

1. Avoid the common error of withholding collective reduction until the helicopter is too close to the intended point of landing. AVOID ABRUPT POWER CHANGES.

2. Do not let the helicopter hover on the glide slope prior to the intended point of landing, as the risk of entering the vortex ring state will be greatly increased.

3. Do not allow the helicopter to become excessively nose high at low altitudes as the tail rotor may strike the ground.

4. If the glideslope angle becomes excessive and/or the rate of descent exceeds 800 fpm

(airspeed less than 40 KTS), a waveoff shall be initiated to avoid the possibility of entering the vortex ring state. See Vortex Ring State, TH-57 NATOPS, Part IV or Chapter 11.

5. The "pendulum effect" as described under Normal Approach is applicable to steep approaches as well and should be anticipated.

6. Do not stare through the chin bubble at the landing spot! Scan!

418. WAVEOFF – POWER ON

Maneuver Description. The waveoff enables the pilot to terminate an approach or descent and transition to a normal climb.

Application. The waveoff is a transition from a low power, descending flight condition to a power-on climb.

Procedures

Power On

1. Ensure the twist grip is full open.

2. Increase the collective to arrest the rate of descent. Maintain balanced flight.

3. Adjust the nose to the appropriate climbing attitude and use collective to establish a 70 KTS, 500 to 700 fpm climb, and maintain balanced flight.

Crew Resource Management

1. PAC or PNAC initiates waveoff using appropriate procedures, if uncomfortable with the maneuver. (Decision Making)

2. PAC initiates or PNAC calls for a waveoff, if glideslope becomes excessive and/or rate of descent exceeds 800 fpm at airspeed less that 40 KTS. (Assertiveness)

3. PAC performs waveoff when a crewmember calls "Waveoff." (Adaptability/ Flexibility)

4. PAC and PNAC ensure twist grip is positioned to Full Open. (Situational Awareness)

5. PAC/PNAC monitors rotor rpm, TOT, and Torque. (Situational Awareness)

6. PAC makes appropriate radio call, as required, upon establishing positive rate of climb and balanced flight. (Communication)

Amplification and Techniques

1. Waveoff by ensuring the twist grip is full open; then, increase the collective to arrest the rate of descent (in most cases, initially setting 50% torque will significantly slow or stop the rate of descent). Maintain balanced flight. Adjust the nose to the appropriate attitude and adjust collective to at least 70% torque in order to establish a 70 KTS, 500 to 700 fpm climb (i.e., "70, 70, ball, call"). Maintain balanced flight.

2. Monitor closely rotor rpm, TOT and torque when executing a waveoff. For example, increasing collective with the twist grip partially open will result in dangerously low rpm and a high TOT condition not conducive to safe flight. Until normal waveoff engine power is assured, maintain the aircraft within safe autorotational parameters.

3. Execute the maneuver smoothly, yet positively.

4. When in the channel and executing a waveoff from an engine failure, always turn away from the channel. Re-enter the channel perpendicular to the channel on altitude and airspeed.

Common Errors and Safety Notes

1. Ensure twist grip is full open.

2. Failure to transition to the 70 KTS climbing attitude.

3. Failure to maintain balanced flight.

4. Failure to maintain climb at 500 to700 fpm.

5. Failure to keep torque within limits.

6. Failure to turn away from channel.

7. Failure to reenter channel on altitude and airspeed.

8. Do not roll the twist grip to flight idle on the power-on waveoff.

419. WAVEOFF – POWER OFF

Maneuver Description. The power off waveoff enables the pilot to terminate a simulated emergency procedure or autorotative descent and transition to a normal climb/forward flight.

Application. The power off waveoff is a transition from any situation where the twist grip is not in the full open position to a power on climb/forward flight.

Procedures

1. Time and altitude permitting:

   a. Smoothly lower the collective to the full down position.

   b. With collective full down, smoothly rotate the twist grip to the full open position and check for normal acceleration. PAC shall verbalize, **"TWIST GRIP FULL OPEN."** PNAC shall confirm and verbalize, **"ROGER, TWIST GRIP FULL OPEN."**

   c. Increase collective as necessary to arrest rate of descent.

   d. Adjust the nose to the appropriate attitude and use collective to establish a 70 KIAS, 500-700 FPM climb, and maintain balanced flight.

   e. Both pilots shall continuously clear the aircraft during climbout.

2. Time and altitude not permitting:

   a. It is recommended that the IP consider using the Low RPM Recovery procedures as necessary.

WARNING

Lowering the collective to avoid an overtorque may create or exacerbate an unsafe flight profile. An overtorque is preferable to damage or destruction of the aircraft.

CAUTION

In flight, avoid a pausing or creeping movement while increasing or decreasing the twist grip between the FLIGHT IDLE and FULL OPEN positions. If the movement is not made at a firm and continuous rate, N_g underspeed and/or oscillation may occur. This may cause an momentary and false ENG OUT warning indication.

Crew Resource Management

1. PAC or PNAC initiates waveoff using appropriate procedures, if uncomfortable with the maneuver. (Decision Making)

2. PAC performs waveoff when a crewmembers calls "Waveoff." (Adaptability/Flexibility)

3. PAC and PNAC ensure twist grip is positioned to Full Open. (Situational Awareness)

4. PAC/PNAC monitors rotor RPM, TOT, and Torque. (Situational Awareness)

5. PAC makes appropriate radio call, as required, upon establishing positive rate of climb and balanced flight. (Communication)

Amplification and Techniques

1. After increasing the collective to stop the rate of descent (in most cases, initially setting 50% torque will significantly slow or stop the rate of descent), adjust the nose to the 70 KIAS climbing attitude and adjust collective to at least 70% torque in order to establish a 500 to 700 FPM climb (i.e. "70, 70, ball, call"). Maintain balanced flight.

2. Monitor closely rotor RPM, TOT and torque when executing a waveoff. For example, increasing collective with the twist grip partially open will result in dangerously low RPM and a high TOT condition not conductive to safe flight. Until normal waveoff engine power is assured, maintain the aircraft within safe autorotational parameters.

3. Execute the maneuver smoothly, yet positively.

Common Error and Safety Notes

1. Ensure twist grip is full open.

2. Failure to transition to the 70 KIAS climbing attitude.

3. Failure to maintain balanced flight.

4. Failure to maintain climb at 500 to 700 FPM.

5. Failure to keep torque within limits.

420. QUICK STOP FROM A HOVER

Maneuver Description. The quick stop is a coordinated deceleration of the helicopter while maintaining constant heading and altitude.

Application. This maneuver enables the pilot to develop control coordination needed to slow the helicopter rapidly in order to successfully abort a takeoff.

Procedures

1. Begin a transition to forward flight.

2. At 35 feet and 50 KTS, level-off to stabilize airspeed and altitude while maintaining heading and ground track with the courseline.

3. Coordinate down collective with aft cyclic to slow the helicopter while maintaining constant heading and altitude.

4. Slow to approximately 25 KTS groundspeed.

5. Recover by coordinating up collective and forward cyclic to accelerate to 50 KTS while maintaining constant heading and altitude. Resume the transition to forward flight profile.

Amplification and Techniques

1. Begin the maneuver from a stable hover, transitioning to forward flight.

2. Continue to climb as in a normal transition to forward flight.

3. At 35 feet of altitude and 50 KTS of airspeed, level-off to stabilize altitude and airspeed while maintaining heading and ground track aligned with the courseline. Your instructor will show you the proper technique to level-off at 35 feet and 50 KTS. Use the airspeed indicator to judge 50 KTS. Do not use the altimeter to measure 35 feet.

4. Maintain the wing down, top rudder crosswind correction throughout the maneuver.

5. Begin the quick stop by lowering collective and applying aft cyclic to reduce forward speed. Balance these pressures so that your altitude remains constant. With downward pressure on the collective, you must coordinate right pedal to compensate for reduction in torque or the nose will yaw left. Make your control changes with pressures-smooth, positive, and gentle.

6. Slow to approximately 25 KTS groundspeed. Do not use the airspeed indicator to judge groundspeed. (Airspeed indicator is unreliable below 40 KIAS).

7. Recover by smoothly coordinating up collective and forward cyclic to accelerate to 50 KTS airspeed while maintaining a constant altitude, then resume the transition to forward flight profile.

8. The quality of the maneuver is determined by its relative smoothness and control coordination. Do not rush the maneuver. It is neither quick, nor a stop.

Common Errors and Safety Notes

1. Failure to level off at 35 feet and stabilize airspeed at 50 KTS.

2. Rushing the maneuver (i.e., climbing during deceleration/acceleration).

3. Failure to maintain altitude.

4. Failure to decelerate properly.

5. Failure to maintain heading.

6. Failure to resume the transition to forward flight profile after returning to 50 KTS airspeed.

421. SLIDING LANDING

Maneuver Description. The sliding landing utilizes ground cushion and translational lift to reduce the power required for landing under high gross weight, high density altitude conditions or reduced power available conditions.

Application. The sliding landing is practiced to simulate conditions when hovering in ground effect is not possible or when maximum gross weight or density altitude prohibit a hover. Additionally, a sliding touchdown gives the pilot the advantage of greater helicopter controllability during touchdown under high gross weight conditions. It may be the safest type of landing to utilize in certain emergency situations when power is limited.

Procedures

1. Utilize normal approach procedures.

2. Intercept the final course line, adjust the nose attitude to decelerate, but maintain translational lift (13 to 15 KTS).

3. At 5 to 10 feet AGL, level the skids for touchdown with 3 to 15 KTS groundspeed. Maintain heading with the pedals.

4. After touchdown, smoothly lower the collective as necessary to bring the aircraft to a gradual stop. Once stopped, smoothly lower the collective to the full down position.

Recommended Verbal Procedures

"LEVEL SKIDS, FORWARD AND DOWN"

"LEVEL SKIDS, FORWARD AND DOWN"

"LEVEL SKIDS, FORWARD AND DOWN" – ensure skids are level, and the aircraft is aligned straight and NOT yawed prior to touchdown.

Amplification and Techniques

1. The helicopter is flown as in a normal approach utilizing the same procedures and checkpoints.

2. Maintain translational lift (13-15 KTS) until you get into ground effect. At 5 to 10 feet AGL, level the skids to touchdown with 3 to 15 KTS groundspeed. The desired speed at touchdown depends on the condition of the landing surface.

WARNING

Failure to align the aircraft with direction of travel may result in dynamic rollover.

CAUTION

Excessive groundspeed combined with uneven terrain may result in excessive rocking of the aircraft and potential driveshaft-to-isolation mount contact.

3. For a sliding landing to be effective, the helicopter *must* remain in *effective translational lift* until transitioning to the touchdown attitude. As the helicopter approaches the ground, adjust cyclic, as necessary, to establish the skids-level touchdown attitude. Coordinate collective to affect a smooth touchdown.

4. After touchdown, reduce collective slightly to keep the aircraft on the ground and to control the length of the ground slide, adjust the pedals as necessary to maintain aircraft heading aligned with direction of travel.

CAUTION

Reduction of the collective at an excessive rate and/or magnitude upon touchdown may result in the skids digging in and the aircraft rocking forward precipitously.

5. Once stopped, smoothly lower the collective to the full down position.

Common Errors and Safety Notes

1. Do not land the helicopter with lateral drift. Compensate for any crosswind with "wing down, top rudder." Ensure skids are aligned with ground track.

2. Avoid the common tendency to fixate on the ground during touchdown.

3. After touchdown, utilize the antitorque pedals to maintain heading.

4. Do not allow the helicopter to become excessively nose high or low at low altitude. The tail rotor may strike the ground as a direct or indirect result of either.

5. After touchdown, excessive reduction of the collective may cause the skids to dig in.

422. NO HOVER LANDING

Maneuver Description. The no hover landing enables the pilot to safely terminate an approach to a landing without transitioning to a hover.

Application. The no hover landing is an alternate termination procedure used in conjunction with the normal and precision approaches. A no hover landing is called during operations when the landing visibility will be reduced by the rotor wash, where HIGE or HOGE is not possible, or when termination to a hover is not desirable.

Procedures

1. Utilize normal or steep approach procedures.

2. As the helicopter approaches ground effect, adjust collective to continue the descent to a landing with little to no groundspeed.

Recommended Verbal Procedures

No Hover Landing (on short final):

"LEVEL SKIDS, FORWARD AND DOWN"

"LEVEL SKIDS, FORWARD AND DOWN"

"LEVEL SKIDS, FORWARD AND DOWN" – ensure skids are level, and the aircraft is coming forward and down all the way until touchdown, NOT to a low hover.

Amplification and Technique

1. The normal or steep approach procedures will be the same as those previously discussed. As the helicopter approaches the landing spot, adjust closure rate and rate of descent to continue down the glideslope.

2. With the descent and closure rates under control, continue the descent through the hover altitude. As the helicopter nears the ground it will enter ground effect. DO NOT RUSH!! Maintain a continuous controlled glideslope to a smooth touchdown with the landing spot under the center of the aircraft. The helicopter should touchdown level with no drift.

3. Anticipate left rudder as power is applied, and adjust cyclic as necessary to eliminate any lateral drift.

4. As the helicopter descends through five feet of altitude, reemphasize the "out" portion of the hover scan. This will enable the pilot to easily correct heading and drift while eliminating the tendency to over control the descent.

5. Do not rush the maneuver.

Common Errors and Safety Notes

1. Not anticipating ground effect and allowing the descent to stop, resulting in a hover.

2. Failure to eliminate drift.

3. Allowing the nose to yaw due to rapid application of collective and/or improper use of pedals.

4. Allowing scan to move inward too close to the aircraft and fixating on the spot.

5. Anticipating ground contact and lowering collective too quickly, resulting in a firm landing.

6. Poor cyclic control, lowering the nose before touchdown allowing the aircraft to slide forward after ground contact.

423. HYDRAULIC BOOST-OFF APPROACH

Maneuver description. The boost-off approach acquaints the pilot with the techniques used to make a safe landing in the event of a hydraulic system failure in flight.

Application. This maneuver instills confidence and allows the pilot to practice-simulated boost-off flight terminating in a five-foot air taxi with five KTS groundspeed.

Procedures

1. In the upwind, the instructor will turn the hydraulic switch off to simulate a hydraulic system failure.

2. Fly a pattern at a comfortable airspeed following the procedures similar to the normal approach. However, do not slow the aircraft to a hover, but terminate in a five-foot hover taxi with five knots groundspeed.

3. When stabilized in a hover taxi the instructor will assume control of the aircraft and the student will place the boost switch in the on position when requested.

Amplification and Techniques

1. In the upwind, the instructor will secure the boost switch.

2. Fly a pattern at a comfortable airspeed (IAW NATOPS) following procedures similar to the normal approach. However, do not slow the aircraft to a hover, but terminate in a five-foot hover taxi with five knots groundspeed.

3. When stabilized at five feet and five knots, the instructor will assume control of the aircraft and the student will place the boost switch in the on position when requested.

4. Increased force will be required for control movements when the hydraulic boost system is OFF, and considerable coupling will be noticed between cyclic and collective.

5. The collective rigging is such that additions are easier than reductions.

6. Increased force will be required for control movements when hydraulic system is secured. Due to increased control coupling, control inputs should be as smooth as possible.

7. Even though the controls will be stiff, maintain a good basic airwork scan and make the aircraft conform to the desired pattern.

8. The force trim system is still operable with the boost OFF.

Common Errors and Safety Notes

1. Ensure a comfortable rate of descent is maintained from the 180º position to final.

2. A slight control shudder may be felt when turning the hydraulic system back on. Applying minimum control pressure will reduce the severity of the shudder.

3. Avoid slowing below five knots groundspeed as lateral stability will decrease.

4. "Fighting" the controls.

5. High on final, insufficient down collective.

6. Failing to maintain good basic airwork.

7. Terminating in a hover vice hover taxi.

8. IUTs terminating in a touchdown shall go to a hard surface runway.

424. STAB OFF APPROACH

Maneuver Description

The stab off approach is a maneuver in which enables a pilot to safely land the aircraft in the event of a ministab flight control system failure.

Application.

The stab off approach is a confidence maneuver which shows the SMA a safe landing can be accomplished should the TH–57C ministab flight control system fail in flight.

Procedures

1. The instructor will initiate the maneuver by securing the ministab on downwind.

2. Fly a normal pattern and terminate the maneuver in a hover followed by a vertical landing or no hover landing.

Amplification and Technique

1. The helicopter is flown as in a normal approach utilizing the same procedures and checkpoints to arrive in a five-foot hover or no hover landing.

2. On downwind, the instructor will secure the MINISTAB system and the SMA will fly a normal approach to a hover and then execute a vertical landing or no hover landing.

3. After completion of the landing, the MINISTAB system will be reactivated prior to takeoff.

4. DO NOT RUSH THE MANEUVER!

5. Use limited cyclic inputs to control the rate of closure and collective to establish a rate of descent such that the helicopter will arrive at hover altitude over the intended point of landing. Abrupt, incorrect, or uncoordinated cyclic and collective inputs may cause ballooning, sinking, or stair–stepping on the approach glideslope.

6. Constant depression of the FORCE TRIM button during the hover transition may enable the pilot to better control.

Common Errors and Safety Notes

1. If, during the maneuver, the aircraft cannot be controlled safely either the instructor or SMA may reactivate the MINISTAB system.

2. Ensure a controlled descent during the approach to minimize excessive control inputs in the hover transition.

3. The force trim system is still operable with the MINISTAB system secured. Ensure proper trim technique to reduce pilot workload throughout the maneuver.

THIS PAGE INTENTIONALLY LEFT BLANK

CHAPTER FIVE
AUTOROTATION MANEUVERS

500. INTRODUCTION

This section focuses on autorotational flight. Every helicopter pilot must develop the awareness and skills necessary to fly the helicopter in the unlikely event of a complete power loss. This is especially pertinent while flying the single-engine TH-57.

After you have demonstrated an aptitude for flying the helicopter, you will be introduced to engine failures and powered off flight. With complete procedural knowledge and extensive practice, autorational flight will become nearly second nature to the skilled helicopter pilot. It is imperative that you have a thorough and working knowledge of the aerodynamic profile and the factors that enhance the execution of a successful autorotation.

Autorotations will be introduced at altitude, in a hover, and finally in the pattern. Before your first SOLO, you will be able to fly the aircraft through the transition from powered flight to autorotational flight, maneuver for landing, and execute a safe landing. With sound understanding of the procedures, these maneuvers can become some of the most fun maneuvers you will fly. Your ability to successfully complete a practice autorotation will build confidence in your ability to execute such a landing in the event you lose your engine. Enjoy these maneuvers! Challenge yourself to be as smooth on the controls as your instructor. Sadly, only in the training command will full autorotations be practiced.

501. SIMULATED ENGINE FAILURE IN A HOVER AND HOVER TAXI (CUT GUN)

Maneuver Description. A cut gun is an IP or IUT-initiated maneuver simulating loss of power in a hover or forward hover taxi.

Application. There are quite a few good reasons for practicing this maneuver. Among them are the following:

1. Hovering requires the use of high power output by the engine; therefore, if the engine is susceptible to failure, it is quite probable the failure will occur while hovering. This is also true of any component in the power train.

2. You learn a lot about the power-off performance of your helicopter by this maneuver, such as available pedal control and response, and rotor inertia and response.

3. This is an excellent coordination and control-timing exercise.

Procedures

1. Establish the helicopter into the wind in a five-foot hover or five-foot/ five-knot forward hover taxi.

2. When the instructor rotates the twist grip to flight idle to simulate loss of power, hold the collective pitch constant and maintain heading with pedals.

3. Allow the aircraft to descend, eliminate any drift, and cushion the touchdown with collective.

4. When on the ground, smoothly lower the collective full down.

Recommended Verbal Procedures

Simulated Engine Failure in a hover:

"FREEZE THE COLLECTIVE" = let the aircraft begin to settle on its own.

"STOP YAW AND DRIFT" = use pedals to *stop yaw*, cyclic to eliminate aft/sideward drift and level skids.

"CUSHION, CUSHION, CUSHION" = use up collective to touchdown smoothly with level skids.

Simulated Engine Failure in a hover taxi:

"FREEZE THE COLLECTIVE" = let the aircraft begin to settle on its own.

"STOP YAW AND DRIFT" = use pedals to *maintain heading*, cyclic to eliminate sideward drift.

"CUSHION, CUSHION, CUSHION" = use up collective to touchdown smoothly with level skids.

Amplification and Technique

1. The instructor shall initiate the simulated engine failure by announcing **"Simulated"** and rotating the twist grip to the flight idle position.

2. The instructor may elect to give the cut gun while the helicopter is in a hover or hover taxi into the wind.

3. Now let us think about what we are going to do for a moment. We are perfectly set up for a normal power-on landing in which all we have to do is hold the attitude we presently have as we lower the aircraft into ground contact. This has not changed. The really important thing we must do is keep a *level attitude* for this landing. That is primary. Next, when the instructor cuts the throttle, we are no longer driving the rotor and all torque correction (left pedal) is then unopposed. We must neutralize tail rotor pitch by coordinating a slight amount of right pedal when the instructor reduces the twist grip to idle or the nose will yaw left. If we are late with right pedal, it will require more right pedal to stop the turn once it is started. Right pedal has removed one of the forces at work on the helicopter; the thrust produced by the tail rotor. It has been moving a large volume of air to the left of the aircraft. If this has been unopposed, we would have been drifting right, but unconsciously, we have countered this force with a little left

cyclic. Now we must remove this correction or the aircraft will roll and drift left. A very slight amount of right cyclic pressure is plenty.

4. As the throttle is reduced to flight idle, the nose of the helicopter may pitch up causing aft drift and the helicopter will tend to drift slightly left. **The pilot may have to displace the cyclic slightly forward and right to ensure the helicopter descends vertically.** DO NOT DRIFT AFT OR LATERALLY. At fuel states lower than 45 gallons the helicopter may tend to drift forward, vice aft, due to a forward center of gravity shift. In this case, utilize aft cyclic if required while eliminating all drift.

5. As mentioned in the NATOPS manual, the helicopter will tend to maintain altitude momentarily after the twist grip is rotated to idle. This allows a short amount of time to get the heading under control. Then, the helicopter will begin to settle with a slow rate of descent. Let it settle. If you pull pitch to *hold* your altitude, you will hold your altitude for about four seconds and the result is commonly referred to as a hard landing. The only thing smiling afterwards is the landing gear! Use collective as necessary to maintain the slow rate of descent to the ground.

6. Do not wait too long, however, to respond with collective. "Too little, too late" may result in a hard landing as easily as "too much, too early."

7. The most important aspect of this maneuver is attitude control. Drift must be eliminated and the helicopter stabilized prior to touchdown. If the maneuver is given from a forward hover taxi, five KTS or less of forward movement is acceptable on touchdown. Do not try to stop the forward movement. High nose attitude (tail low) near the ground may result in striking the tail skid on the ground.

8. When the maneuver is initiated in a hover and a yaw develops, use sufficient rudder input to stop the rotation. Accept the new heading and descend vertically to a touchdown. However, in a hover taxi if yaw develops the heading must be realigned with the ground track before touchdown.

9. Once the collective is increased to control the rate of descent it should not be decreased prior to touchdown. If too much collective has been applied, freeze the collective and allow the aircraft to resume a comfortable rate of descent. Then, cushion the touchdown with remaining collective.

10. After the helicopter has landed, stop increasing collective pitch. When it has come to a complete stop and both skids are firmly on the ground, smoothly lower collective pitch to the full down position and neutralize the controls.

11. Maintain a hover scan. Your peripheral vision tells you how high you are within a matter of inches.

NOTE

The collective pitch must be held stationary until the helicopter starts to descend.

Common Errors and Safety Notes

1. Select a flat area to land.

2. Do not inadvertently raise or lower the collective on entry.

3. The pilot must utilize an “out and down” scan to safely perform the maneuver.

4. Pulling too much collective early may lead to a hard landing.

5. Stay relaxed. The natural human tendency is to tense up during periods of stress which may inadvertently result in aft cyclic application.

502. AUTOROTATIONS

Maneuver Description. An autorotation is a condition of non-powered flight in which the rotor speed and lift result from the reversed airflow through the rotor system. Autorotations enable the pilot to land safely in the event of a loss of power at altitude.

Application. An autorotation occurs when the rotor system is driven by aerodynamic forces rather than by the engine. Rotor speed and lift are sustained by energy that is derived from the stream passing upward through the rotor system as the helicopter descends. Understanding the dynamics peculiar to autorotative flight forms the core for executing many emergency procedures (e.g., engine failure, fire in flight, etc.).

Procedures

1. Maintain 70 KTS, 600 feet AGL, and balanced flight in the traffic pattern.

2. Enter the autorotation by smoothly lowering the collective to the full down position and simultaneously adding right pedal to maintain balanced flight. Reduce the twist grip to the flight idle position and turn to the courseline.

3. Transition to the 50 to 60 KTS descending attitude. Monitor N_r and control between 90 and 107% with collective (optimum 94 to 95%). Maintain balanced flight.

4. Intercept the courseline and establish crosswind correction as necessary. Maintain the 50 to 60 KTS descending attitude.

5. Ensure the collective is full down by 150 feet AGL.

6. At 75 to 100 feet AGL, flare with cyclic in order to reduce rate of descent, reduce groundspeed, and increase N_r.

POWER RECOVERY -	PAC:	SMOOTHLY ROTATE THE TWIST GRIP FULL OPEN AND VERBALIZE "TWIST GRIP FULL OPEN."
	PNAC:	VERBALLY CONFIRM "TWIST GRIP FULL OPEN."
FULL -	PAC:	LEAVE THE TWIST GRIP AT FLIGHT IDLE AND STATE "TWIST GRIP AT FLIGHT IDLE."
	PNAC:	VERBALIZE VERIFICATION, "ROGER, TWIST GRIP FLIGHT IDLE."

7. Adjust flare as required to achieve desired groundspeed and a minimal rate of descent. (The goal is a minimal rate of descent at 10 to15 feet AGL.)

8. At 10 to 15 feet AGL, coordinate up collective and forward cyclic to slow the rate of descent and lower the nose to level attitude. Maintain heading with the pedals.

a. Power recovery - recover at 5 feet, 0 to 10 KTS groundspeed. Stabilize prior to transition to forward flight.

b. Full - level the aircraft prior to touchdown. Use collective as necessary to cushion the landing and touchdown with 0 to 10 KTS groundspeed.

Recommended Verbal Procedures

Established on downwind (600 ft AGL and 70 KIAS):

"LANE" = check 90 or 180 auto lane and call out any traffic in the lane.

"LOCK" = ensure shoulder harnesses are locked.

"SOCK" = check windsock, ensure there is no tailwind component, and note any crosswind.

Prior to Entry (600 ft AGL 70 KIAS):

"ALTITUDE 600 FT, 70 KIAS" = confirm.

"VSI AT OR BELOW ZERO, AIRCRAFT IN TRIM" = confirm.

On Entry:

"DOWN" = smoothly lower the collective to the full down position in no less than 2 seconds.

"RIGHT" = use right pedal as necessary to center the ball and maintain balanced flight.

"IDLE" = smoothly rotate the twist grip to the flight idle position.

"TURN" = maintain balanced flight, initiate a turn to intercept course line, and establish a crosswind correction as necessary. For 180s, the phrase, **"over 1, back 1**(with cyclic)**"** and **"up 1**(with collective)**"** and then **"feel the g, pull the g"** may be used to help the student enter.

Descent (above 200 ft AGL):

"ATTITUDE" = use cyclic to control nose attitude in a 50-60 KIAS descending attitude.

"N_r" = use collective to control N_r between 90-107% (94-95% N_r is optimum).

"BALL" = use pedals to maintain balanced flight or crosswind correction as necessary.

Descent (below 200 ft AGL)

"200 FT ON COURSELINE" = at no lower than 200 ft AGL ensure wings are level (or proper crosswind correction is established) and aircraft is on courseline.

"150 FT COLLECTIVE FULL DOWN" = ensure that collective is in the full down position.

"100 FT FLARE, TWIST GRIP FULL OPEN" or **"TWIST GRIP FLIGHT IDLE" =** flare with aft cyclic, and with the collective in the full down position, smoothly rotate the twist grip to the full open position for the power recovery or remain at flight idle for the full auto. Pilot not at the controls confirm twist grip position and verbalizes **"ROGER, TWIST GRIP FULL OPEN"** or **"ROGER, TWIST GRIP FLIGHT IDLE."**

"10-15 FT PULL" = pull up collective to arrest rate of descent.

"PAUSE" = momentarily pause to slow groundspeed to 0 to 10 knots.

"LEVEL" = apply forward cyclic to achieve a 5 ft level skid attitude, nose aligned with direction of travel.

"5 FT TAXI, TAXI, TAXI"* (for Power Recovery Auto) = five foot*, level skid attitude hover taxi at 0 to 10 knots groundspeed, aligned with direction of travel (*10 foot for night).

-or-

"5 FT CUSHION, CUSHION, CUSHION" (for Full Auto) = five foot level skid attitude, at 0 to 10 knots groundspeed, cushioning touchdown with collective, aligned with direction of travel.

Crew Resource Management

1. PAC briefs crew prior to each practice autorotation, includes type of auto and type of recovery. (Communication)

2. PAC/PNAC ensures landing area is clear and states "Clear (left or right) and below" and verifies wind direction. (Situational Awareness)

3. PAC/PNAC ensures flare is initiated 75 to 100 feet and follows with report of twist grip position. (Situational Awareness)

5-6 AUTOROTATION MANEUVERS

Amplification and Techniques

1. **General**

a. Autorotation entries will be practiced from the 90 and 180 degree positions. At the site, all practice autorotations shall be entered from 600 feet AGL, 70 KTS and balanced flight in a "wings" level attitude.

b. When positioned in accordance with the course rules, visually clear the landing area and check wind direction.

c. Initiate all autorotations by smoothly lowering the collective to the FULL DOWN position. Simultaneously adjust anti-torque pedals to maintain balanced flight and adjust the cyclic to the appropriate descending attitude (50 to 55 KTS for lower gross weight autos (i.e., TH-57B) or 60 KTS for higher gross weight autos (i.e., TH-57C)) while turning toward the courseline. The entry procedure may be summarized as "Down, right, idle, turn." Your instructor will demonstrate the procedure to you, emphasizing the proper entry attitudes. Ensure that the engine is still running by checking for N_g, at or above flight idle.

d. Use sufficient AOB to turn the aircraft to arrive into the courseline with at least 200 feet. If the aircraft is not aligned with the courseline by 200 feet, a waveoff shall be initiated.

e. Upon reaching the courseline, set the appropriate crosswind correction.

f. From all entry positions, but particularly true of the 180 entry, a primary concern is getting the aircraft into the courseline with as much altitude as possible. Once the collective has been lowered and the throttle retarded to flight idle, the helicopter will begin to lose altitude. A delayed turn will mean a lower altitude when arriving into the courseline. Additionally, out of balanced flight condition and improper descending attitude will also result in an increased sink rate.

g. During the turn to the courseline, a scan pattern to see *outside* as well as *inside* the cockpit should be used. Of primary importance *outside is* maintaining the appropriate descending attitude and a proper rate of turn. Essential items to scan *inside* are rotor RPM (N_r, the little needle) and the balance ball (summarized as "attitude, N_r, ball"). Rotor RPM will build anytime "G" forces are applied to the rotor system. Usually this occurs in the turn to the courseline and during the deceleration flare.

h. N_r should be maintained in the range from 90 to 107% throughout the maneuver. An N_r range of 94 to 95% is considered optimum for autorotations in the TH-57 and every effort should be made to maintain 94 to 95% throughout the maneuver due to the resultant dramatic decrease in rate of descent. When the N_r exceeds the desired percentage as a result of the increased "G" load in the turn, timely use of UP collective will increase the pitch in the blades and slow the N_r to the desired RPM.

In an autorotation, N_r is the most critical element. It provides the lift we need to stabilize an acceptable rate of descent and the inertia necessary to cushion the landing. With the N_r too low, a helicopter glides like a beveled *brick;* in effect, you have no wing. In autorotations, the collective must be smoothly lowered to maintain N_r between 90 and 107%. You *must get the collective down in the event of a power loss to maintain your N_r*. However, rapid or abrupt collective movement could lead to mast bumping and therefore *must* be avoided.

i. Inertia is a very important property of all rotating components. We use the residual inertia stored in the rotor system to cushion the landing. At the bottom of the autorotation we produce more lift by raising the collective which increases the angle of attack of the blades. This destroys the balance of forces on the rotor; drag increases sharply and the N_r begins to decay. We must develop a feel for the amount of residual inertia and use it like a miser so that we have enough left for a smooth landing. Once the N_r drops below approximately 70% it will no longer generate any useful lift. The N_r you have available to use for cushioning is like a bank account governed by the most rigid of banking laws. If you use it all before you get to the ground, you are at the mercy of gravity. It is a great feeling to find you have made a good landing and there is something left in your account. But it is a miserable feeling when the bottom falls out and you know there is nothing you can do.

j. Under most conditions, it is easy to make a smooth touchdown from an autorotation in the TH-57. The trouble is there are still a few ways to foul it up; tension, inexperience, and ignorance are generally at the root of most difficulties. Learn all you can about this maneuver and develop a feel for the variables involved. With knowledge and proficiency comes confidence and confidence relieves tension. This can be the most enjoyable maneuver you will do!

k. Upon arriving into the courseline, prior to the flare, the scan should focus almost entirely outside. The scan should include:

i. *OUT* - to the horizon for attitude, ground track, and nose alignment.

ii. *DOWN* - for altitude to set the flare and for closure (groundspeed).

iii. *IN* - to cross check airspeed in the descent.

2. **Power Recovery.** Power recovery autos are practiced so that you will become comfortable with autorotative procedures prior to being introduced to full autos.

a. At 75 to 100 feet above the ground, initiate a smooth cyclic flare in order to reduce rate of descent, reduce groundspeed, and increase N_r.

b. Smoothly advance the twist grip to the full open position.

c. After initiating the flare do not delay opening the twist grip; do not wrap it on either.

There will be sufficient time for a positive, smooth rotation to full open. Each and every autorotational flare will be different. The amount of flare required will be a function of the existing wind conditions, airspeed, density altitude, and the aircraft gross weight. Do not be mechanical! Scan groundspeed and rate of descent and adjust the nose attitude to make appropriate corrections. Maintain an outside scan. The Pilot at the Controls should scan the Radar Altimeter the last time crossing 100 feet AGL. Below 100 feet AGL, both aircrew are focused on an outside scan. The goal is to have minimal rate of descent through use of the flare at approximately 10-15 feet AGL. Groundspeed upon touchdown will vary between 0 to 10 KTS.

d. At 10 to 15 feet, suddenly and smoothly increase the collective to slow rate of descent, pause, then add forward cyclic to level the aircraft. Left pedal will be required to maintain heading due to the increase in torque (i.e., pull, pause, level).

e. Recover at 5 feet, 0 to 10 KTS. Stabilize momentarily in a hover taxi, check the gauges, and transition to forward flight.

f. Procedures used in the power recovery autorotation are the same for both the “B” and “C” model aircraft. However, interpretation of the procedures at 10 to 15 feet AGL will depend upon the gross weight of the aircraft, density altitude, and wind.

g. Autorotations will be introduced to you in the contact (B) stage of the syllabus in the TH-57B model aircraft. The “B”model is operated at lower gross weights than the “C” model. Because of the reduced weight, step 8 of the procedure is interpreted as a “pull, pause, level.” At 10 to 15 feet, increase the collective to slow the rate of descent. Pause momentarily and then smoothly lower the nose toward the level attitude by adding forward cyclic. This momentary pause will allow the increased thrust to slow your groundspeed and rate of descent.

h. Later in the syllabus, you will be performing power recovery autos in the “C” model aircraft. Because the “C” model operates at a higher gross weight, at 10 to 15 feet the coordinated increase in collective and forward cyclic is performed almost simultaneously with little or no pause. When operating under conditions of high gross weight, high density altitude and little or no wind in either aircraft, you will find it necessary to decrease the length of the “pause.” This will decrease the chance of a vertical recovery and resultant possible over torque.

   i. Once the aircraft is stabilized in an air taxi, check the gauges/caution lights and a transition to forward flight may be initiated. With minimum delay in the air taxi, no clearing turns are necessary.

   ii. Avoid the tendency to either scan too close to the aircraft or fixate on the landing area. Failure to scan out may result in a nose-high touchdown attitude.

3. **Full Autorotations**

a. A full autorotation is performed in the same manner as the practice autorotation with power recovery except that the twist grip remains at flight idle throughout the maneuver.

b. Avoid the tendency to pull the collective early. Wait until 10 to 15 feet and then raise the collective sufficiently to slow the rate of descent but do not stop it. Remember to keep the scan moving; do not fixate on the landing area!

c. Full autorotations are performed in the "B" model aircraft only under controlled gross weight conditions. Therefore, review the "pull, pause, level" technique under the power recover amplification.

d. As you level the nose, the maneuver will look very similar to a cut gun in an air taxi. Review those procedures.

e. Make every effort to control the rate of descent with collective when approaching the ground for touchdown. Cushion the landing; do not just raise the collective. Keep the level attitude and maintain heading with the pedals!

f. Touchdown with 0 to 10 KTS of groundspeed.

CAUTION

Landing with 0 KTS of ground speed may be required in some real emergencies but performing a practice zero/zero autorotation leaves no margin for error and could cause damage to the aircraft if over controlled or done improperly. If the aircraft slows too much it may encounter a vertical rate of descent and rapid N_r decay that is likely to result in a hard landing. It is recommended SMAs attempt a touchdown speed no slower than three KTS on practice full autorotations.

g. Reduction of the collective at an excessive rate and/or magnitude upon touchdown may result in the skids digging in and the aircraft rocking forward precipitously. Reduction of the collective to the full down position should only be accomplished when the aircraft has come to a complete stop.

h. Avoid moving the cyclic on touchdown or rollout. This may induce mast bumping or pylon rock. Maintain aircraft heading with rudder pedals.

Common Errors and Safety Notes

1. Entering the maneuver off altitude, airspeed, not "wings" level, or out of balanced flight.

2. Improper transition to descending attitude.

5-10 AUTOROTATION MANEUVERS

3. Improper use of anti-torque pedals on entry (i.e., adding left rudder in a left turn).

4. Failure to maintain balanced flight through the turn.

5. Failure to maintain N_r between 90 to 107% (94 to 95% optimum).

6. Improper flare (too much or not enough).

7. With power recovery autorotations - opening the twist grip too quickly or not at all.

8. Failure to maintain heading while opening twist grip.

9. Failure to establish the appropriate crosswind correction, allowing the aircraft to drift.

10. Flaring too low or too high.

11. Initial collective pull either too high or too low.

12. Excessive yaw when increasing collective to slow rate of descent with power recovery autorotations.

13. Landing on heels - if hard, a severe pitch forward may result, causing skid toes to dig in and flipping the helicopter over.

14. Excessive ground run.

15. Landing with aircraft not aligned with direction of travel.

16. Insufficient cushioning on full autorotations.

17. Collective pulled too high results in N_r too low for control of ground contact and tail rotor control inadequate to hold heading.

18. Collective pull too late - results in a fast touchdown and a hard uncontrollable landing.

19. Leveling too soon or too fast, resulting in acceleration and excessive groundspeed.

20. Abrupt control inputs on touchdown.

21. Lowering the collective too fast and/or too soon once the skids have touched the deck.

22. Not realizing where the winds are coming from and at what intensity when initiating maneuver.

503. SIMULATED ENGINE FAILURE AT ALTITUDE

Maneuver Description. A simulated engine failure at altitude is an instructor initiated maneuver simulating a loss of power at altitude.

Application. The simulated engine failure at altitude is an immediate response training maneuver which helps develop proper and rapid pilot reactions to an engine failure. Learning to respond quickly, confidently, and correctly is the key to a successful recovery from any type of emergency.

Procedures

1. The instructor will initiate the maneuver by verbalizing, **"Simulated"** and rotating the twist grip to flight idle to simulate a loss of power.

2. Lower the collective to enter an autorotation, maintain balanced flight and transition to appropriate airspeed.

3. Initiate a turn toward the landing area, if necessary, and plan the final approach to be into the wind whenever practical.

4. Maintain airspeed from 50 to 72 KTS and N_r from 90 to 107% throughout the maneuver, depending upon the desired glide distance and aircraft gross weight.

5. PAC: Direct PNAC to lock shoulder harnesses, transmit a mayday call, and simulate switching the transponder to emergency.

6. At the site: terminate the maneuver as a power recovery autorotation unless otherwise directed.

7. Away from the site: the instructor will take the controls and initiate a waveoff at or above 400 feet AGL. The waveoff must be completed by 300 feet AGL and at an airspeed no slower than 50 KIAS.

Recommended Verbal Procedures

"DOWN" = smoothly lower the collective to the full down position in no less than 2 seconds.

"RIGHT" = use right pedal as necessary to center the ball and maintain balanced flight.

"TRANSITION" = use cyclic to control nose attitude in a 50-72 KIAS descending attitude.

"TURN" = turn towards the landing zone, aligned into the wind.

"ATTITUDE" = use cyclic to control nose attitude in a 50-72 KIAS descending attitude.

"N_r" = use collective to control N_r between 90-107% (94-95% N_r is optimum)

"BALL" = use pedals to maintain balanced flight.

"LOCK" = ensure shoulder harnesses are locked.

"TALK" = PNAC on ICS "Mayday, Mayday, Mayday, Eightball 123 going down tree field."

"SQUAWK" = PNAC simulate putting Transponder in Emergency.

"RESTART" = simulate Engine Restart in Flight emergency procedures.

Amplification and Techniques

1. Initially as with any malfunction, the proper response is to determine the extent of that malfunction, i.e., a fire warning light does not necessarily verify the presence of an engine compartment fire; a low RPM light or audio tone does not verify an engine failure or low N_r. Electrical malfunctions alone may cause any of these indications and it is the pilot's responsibility to ascertain the validity of the indication and extent of the malfunction. For the purposes of this maneuver, the SMA shall assume the IP has already performed this function. The instructor will close the throttle to the flight idle detent. The instructor shall announce "simulated" once the pilot at the controls recognizes the symptoms and initiates the appropriate action. The PAC shall IMMEDIATELY, yet smoothly, lower the collective to the full down position to prevent N_r decay and, if required, commence a turn to the intended landing area. This transition step shall be verbalized as, "down, right, transition, turn." Select an airspeed between the minimum rate of descent (50 KIAS) and maximum glide (72 KIAS) airspeeds that will allow the aircraft to safely transition to the to the landing area. Remember the range of airspeeds between maximum glide and minimum rate of descent airspeeds. Accordingly, find an autorotational airspeed that will get the helicopter safely to the landing area. Once the landing area is safely made, transition to the 50 to 60 knot descending attitude. The helicopter must be wings level by 150 feet AGL, even if the aircraft is not aligned with the recovery courseline. This transition step may be summarized, i.e. "down, right, transition, turn."

2. During the turn to the field, a scan pattern to see inside as well as outside the cockpit should be used. Of primary importance outside is maintaining the proper nose attitude and a proper rate of turn. Essential items to scan inside are N_r (the LITTLE needle), and the balance ball (i.e., attitude, N_r, ball).

3. N_r should be maintained in the range from 90 to 107% throughout the maneuver. 94 to 95% is considered an optimum N_r for practicing autorotations in the TH-57, and every effort should be made to decrease in rate of descent. When the N_r exceeds the desired percentage as a result of the increased "G" load in the turn, timely use of up collective will increase the pitch in the blades and therefore, slow the N_r to the desired RPM.

4. During the autorotative descent, note the N_g at or above flight idle. Additionally, the pilot will lock his/her shoulder harness, simulate a MAYDAY call over the ICS, and simulate switching the transponder to emergency. (The instructor pilot may accomplish these items upon request.)

5. Simulated engine failures shall only be practiced within autorotative distance of a suitable forced landing area, and shall not be initiated below 500 ft AGL and 60 KIAS.

6. When simulated engine failures are practiced away from the site the instructor shall initiate a waveoff at or above 400 feet. The waveoff must be completed with a minimum of 300 feet and at an airspeed no slower than 50 KTS.

7. Turn away from the channel as you initiate your waveoff, remaining within glide distance of the selected field until you are certain the engine is back on line. Refer to the WAVEOFF section of this instruction for additional waveoff procedures.

8. When at the site, use sufficient AOB to turn if the aircraft is not aligned with the courseline by 200 feet, level the "wings," and waveoff unless directed to continue.

9. When at the site, terminate the maneuver as a power recovery autorotation unless directed otherwise by the instructor. If the instructor desires a full autorotation, it will have been prebriefed or announced when the simulated engine failure is initiated.

10. The suggested priority of action for this maneuver is:

    a. Enter autorotation.

    b. Pick the landing area.

    c. Consider the effect of the wind.

11. Fly the aircraft within safe parameters at all times. Utilize the proper scan pattern developed in practice autorotations to monitor N_r, altitude, attitude, airspeed, etc.

12. In cases requiring emergency autorotative descent, airspeeds up to 100 KIAS are permissible.

Common Errors and Safety Notes

1. Failure to lower collective fully after initial power loss.

2. Failure to adjust airspeed.

3. Failure to maintain N_r within limits.

4. Failure to maintain balanced flight.

5. Failure to make voice report.

6. Improper selection of landing area.

7. Failure to make the selected landing area.

8. Failure to level wings at 150 feet when at site if not into courseline.

9. Failure to make power recovery at site (unless otherwise briefed).

504. CHECKING POWER AVAILABLE AT ALTITUDE

Maneuver Description. Checking power available is performed for two reasons in flight: (1) to ascertain if continued flight is possible and (2) what kind of a landing can be made.

Application. When an emergency procedure calls for "check power available with N_r in limits," you must quickly determine if continued flight is possible. Otherwise, you will be forced to autorotate. If you have sufficient power to maintain flight, you will be executing a land as soon as possible PEL. This maneuver description details what must be accomplished.

Procedures

1. When the emergency procedure calls for "check power available with N_r in limits," raise the collective until the VSI centers on zero or N_r decays to 90%. If the VSI does not level out with Nr above 90%, smoothly decelerate or accelerate towards 50 KIAS. If the aircraft cannot maintain level flight at 50 KIAS and the Nr at or above 90%, then there is not sufficient power available to continue level flight.

2. If VSI is at zero and N_r is greater than 90%, you have sufficient power to maintain flight. Continue with the emergency procedure.

Amplification and Techniques

1. When required by the emergency procedure begin to raise the collective to arrest any rate of descent. Stop raising the collective when either the VSI is at zero or the N_r has decayed to 90%. While maintaining Nr within limits, adjust the nose attitude to accelerate or decelerate to 50 KIAS while maintaining altitude and direction of travel.

2. If N_r is at 90%, airspeed is at 50 KIAS and you still have a rate of descent, you do not have enough power to continue flying. You will be required to affect an autorotative landing. You may use the power you have applied to better position yourself for such a landing. When in position for the auto, lower the collective. DO NOT BRING THE TWIST GRIP TO FLIGHT IDLE.

3. If N_r is at or above 90% and the VSI is at or above zero, you will be able to continue flight. You also need to prepare for a land as soon as possible PEL. To determine what type of landing you can make (i.e. vertical, no-hover, sliding) and the suitable landing site, you will have to determine the power available.

4. Following the last step of the EP, simply and slowly raise the collective until you reach an operating limit (Ng, TOT, Torque). If N_r decays to 90% while attempting to reach a limit, this is your limit. Note your torque. This is the torque you have available to land.

5. Compare your torque available to the torque required to hover prior to departure. If you have that torque available you may execute an approach to a hover and then a vertical landing. If you do not have available the amount required for a hover, you will need to execute a no-hover or (more likely) a sliding landing. You may now look for a landing site suitable for landing safely.

Common Errors and Safety Notes

1. Rushing through the initial power check and determining that power is not sufficient.

2. Entering the auto when not in position.

3. Selecting a landing site not suitable for the power available.

CHAPTER SIX
DEMONSTRATION AND IUT MANEUVERS

600. INTRODUCTION

This section discusses and describes maneuvers the Instructor Under Training shall be required to perform and maneuvers the instructor will demonstrate to the SMA.

Although you, as the SMA, will not execute these maneuvers, a thorough understanding of the procedures will enhance your learning and help make you a more competent helicopter pilot. If, during the course of your studies you do not understand these maneuvers, simply ask your instructor to further explain what the learning objective is for the demonstrated maneuver.

601. LOW RPM RECOVERY (IUT ONLY)

Maneuver Description. A low RPM recovery demonstrates a proper method of recovering from a low RPM situation.

Procedures

1. Enter an autorotation.

2. At 75 to 100 feet, flare and simulate forgetting to rotate the twist grip open.

3. At 15 to 20 feet, crack open the throttle slightly, lower the nose toward a level attitude and simultaneously increase the collective, bleeding rotor rpm no lower than 90%; smoothly rotate the twist grip to the full open position.

4. Complete the recovery in a 5 to 10 KTS, five-foot hover taxi before transitioning to forward flight.

Amplification and Technique

1. Coordinate twist grip application as necessary to maintain N_r above 90% while adjusting cyclic to recover no faster than 10 KTS groundspeed. The twist grip need not be full open when a five-foot, 5 to 10 KTS air taxi is established. However 100% N_r must be restored prior to the transition to forward flight.

2. If N_r falls below approximately 80%, loss of tail rotor effectiveness may occur. If possible, rotate the twist grip to FLT IDLE and complete the cut gun in an air taxi.

3. When in a stable hover taxi, if the N_r is not yet restored to 100%, coordinate twist grip and collective application to prevent a possible over torque.

Common Errors and Safety Note

1. Opening the twist grip before arriving at 15 to 20 feet AGL.

2. Opening the twist grip full open too fast.

602. SIMULATED ENGINE FAILURE ON TAKEOFF (DEMO ONLY)

Maneuver Description. The "cut gun" on takeoff is an instructor-demonstrated maneuver simulating a loss of power at low altitude.

Procedures

1. Start a transition to forward flight and climb to an altitude at or above 50 feet and no slower than 65 KTS. This is to ensure the maneuver entry is in the safe region of Height Velocity Diagram per Figure 4-6 of NATOPS manual, and follows a normal takeoff profile per Par. 407, Transition to Forward Flight.

2. While maintaining the collective setting for climb power, rotate the twist grip to flight idle.

3. Commensurate with airspeed and altitude, lower the collective and adjust the nose attitude to control groundspeed and rate of descent. Monitor N_r and control with the collective.

4. Complete (as briefed) as either a power-recovery or a full autorotation.

Amplification and Technique

The initial response required to successfully recover from an engine failure on takeoff will depend upon your nose attitude. If the aircraft is at or below the flare altitude, apply aft cyclic as necessary and lower the collective to maintain N_r; however, if the aircraft is above the flare altitude, adjust the cyclic forward to maintain airspeed while lowering the collective to maintain N_r. Upon reaching the flare altitude, complete the autorotation using normal procedures.

603. MAXIMUM GLIDE AUTOROTATION

Maneuver Description. The maximum glide autorotation demonstrates increased rate of descent and increased glide distance with increased airspeed. This maneuver shall be conducted as a straight-in autorotation entry.

Procedures

1. Execute an autorotation at 50 to 55 KTS. Note the glide distance.

2. Enter another autorotation at an increased airspeed of 72 KTS.

3. Maintain the entry airspeed and rotor rpm as in the 50 to 55 KTS autorotation.

4. At 100 feet slowly raise the nose, trading airspeed for distance over the ground.

5. At 50 to 55 KTS and 75 feet flare and complete the autorotation. Note the increased glide distance.

Amplification and Technique

1. The point of the demonstration is to show increased glide distance. Optimum airspeed is set forth in the appropriate NATOPS manual.

2. Make airspeed the only variable between the autorotations from entry to 100 feet.

3. This demonstration can terminate in a power recovery or full autorotation. However, they should both be terminated in the same manner.

604. HIGH SPEED LOW-LEVEL AUTOROTATION (DEMO ONLY)

Maneuver Description. A high speed low-level autorotation is an instructor-demonstrated maneuver simulating a loss of power at high airspeed and low altitude.

Procedures

1. Maintain 500 feet and accelerate to 100 KTS on the downwind.

2. At the field boundary, begin a descending turn to arrive on course with the intended landing area at 100 feet and 100 KTS.

3. While maintaining the collective setting, smoothly rotate the twist grip to flight idle. Adjust the collective to maintain N_r limits.

4. Smoothly apply aft cyclic, initiating a flare to dissipate airspeed and prevent the aircraft from settling.

5. As the aircraft reaches the checkpoints of a standard autorotation, complete normal autorotation procedures.

Amplification and Technique

1. The key to a successful high speed low-level autorotation is smooth control inputs as the pilot dissipates excess airspeed while maintaining altitude and N_r and transitioning to normal autorotative parameters.

2. In the event that the pilot desires to gain altitude immediately, a more forceful flare will not only dissipate airspeed, but could result in the gain of 100 to 150 feet of additional altitude. Such a flare will also help maintain N_r initially.

3. As the airspeed approaches 65 KTS, smoothly adjust the nose to the appropriate descending attitude, and reduce the collective to control N_r (94 to 95% optimum). Take care to avoid a low "G" envelope as the aircraft crosses the peak of its climb.

4. Recover as a power recovery or full autorotation.

CAUTION

If a cyclic flare is initiated to gain altitude and dissipate excess airspeed, use extreme caution to avoid a less than one "G" pushover to prevent possible mast bumping. Allowing the aircraft to slow excessively at the apex will result in a reduction of mass airflow through the rotors causing N_r to decay.

Maneuver Training Guidance for 605 - 610

When flying these maneuvers, it is essential to remember that the pedals work. The aircrew must continually emphasize this point during training. It is incumbent on the pilots to remain vigilant and ready to use all controls—including the pedals—at any time to maintain safe parameters.

Primary objectives for the pilot:

1. Foremost, maintain a safe profile at all times, using pedals as needed.

2. Effectively analyze the severity of the malfunction.

3. For hover work, become comfortable and proficient at maintaining a safe, level rotation in a hover (left or right).

4. For altitude work, gain familiarity and comfort with the varying sight pictures on final.

5. Make a proper flare to safely achieve a no-groundspeed hover.

6. Understand the effect of reducing the twist grip to flight idle on a right rotation.

7. Become proficient in timing the twist grip reduction.

8. Control yaw at touchdown and prevent any rolling tendencies from developing.

Because this is a training maneuver, making a landing without using pedals in the hover is a ***secondary objective***. Never accept an unsafe condition for the sake of the simulation. Even if the pilot needs to manipulate pedals to keep training conditions manageable, the primary objectives above can be achieved.

6-4 DEMONSTRATION AND IUT MANEUVERS

A "building block" approach must be taken when first learning these maneuvers. The pilot can think of the Maneuvers at Altitude as three parts: 1) the approach, 2) the hover, and 3) the hover recovery. Since the maneuvers at altitude incorporate the hover recovery procedures, initial training must begin in the hover. Only after the pilot becomes proficient with the hover work should the altitude maneuvers be attempted.

Many variables directly affect the degree of difficulty of the maneuvers. These variables include the amount the pedals are displaced, wind direction and velocity, density altitude, and aircraft gross weight. It is critical for the IP to understand the effect of each of these variables. The first two—wind and pedal displacement—carry the most impact and can significantly impact the difficulty of the maneuver. The pilot must optimize the variables within his/her control. This includes selecting (if able) the runway with a left crosswind and keeping fuel loads to a minimum. However, the variable that the pilot has the most control over is pedal displacement. The procedures for each maneuver provide the pilot a large range of power settings to maintain control over the severity of the simulation. For all flights, the IP should always take a gradual approach, keeping the degree of severity mild for the initial approaches of the flight until the conditions and pilot proficiency can be evaluated first-hand. ***For initial training flights***, it is essential that the IP takes this gradual approach.

605. SIMULATED FIXED PITCH PEDAL POSITION IN A HOVER –NO YAW (DEMO ONLY)

Maneuver Description. This maneuver begins as the pilot fixes the pedals in a relatively stable hover. In this situation, very little or no yaw exists initially as pedals are set to maintain heading for the given conditions. However, as power changes are made with the collective or as the wind shifts or gusts, the aircraft will develop yaw (i.e., right yaw with a power increase and left yaw with a power decrease). By using controlled, mild to moderate collective inputs, the pilot can control the aircraft heading to make a safe landing.

Application. There are two primary purposes for this maneuver. First, the pilot will develop an understanding of how the aircraft reacts to collective inputs and wind conditions with the pedals fixed in this position. Second, the maneuver gives the pilot a safe method to practice landing the aircraft in this condition while maintaining the twist grip in the full open position.

Procedures

1. Establish a stable hover at a 5-foot skid height into the wind line over a smooth, paved surface. Announce, ***"Pedals frozen."***

2. Without manipulating the pedals, make a smooth, gradual increase in collective to initiate a mild, controlled right yaw.

3. After a right yaw is established, smoothly lower the collective to stop the right yaw and initiate a mild, controlled left yaw.

4. Alternate controlled collective increases and decreases as necessary for an effective demonstration. Maintain constant pedal position throughout the maneuver.

5. Making a controlled landing involves timing and patience. Initiate landing by smoothly lowering the collective. Depending on conditions, a mild left yaw will likely develop. If an excessive yaw rate for landing develops, increase collective to stop/slow rotation. Repeat this step until acceptable yaw conditions are established for landing.

6. As the aircraft touches down, eliminate any drift with cyclic and maintain a skids-level attitude. Continue to smoothly and slowly lower the collective once on deck to keep yaw under control and transfer the aircraft weight to the skids. Maintain positive control of yaw until collective is full down.

Crew Resource Management

The IP discusses the importance of maintaining a mild, controlled yaw rate and for keeping a level attitude during touchdown. (Mission Analysis)

Amplification and Technique

This maneuver is designed to be a controlled and comfortable maneuver. Control inputs should be kept smooth and mild. There is no need to rush any inputs, especially for landing. If the landing conditions are not comfortable, either increase collective to gain altitude and reattempt the landing or use pedals to abort the maneuver. If a significant yaw rate develops, especially if it will carry the aircraft heading beyond 90 degrees of the wind line, then the intended conditions for this maneuver have been exceeded. Use pedals to abort the maneuver and regain control of aircraft heading. Twist grip reduction shall not be utilized as a recovery technique for this maneuver.

Do not rush the landing. While in a hover, if the yaw rate remains minimal and controlled, the pilot should focus on making several alternating mild collective inputs to get a feel for the interaction of the aircraft with the given wind conditions and power changes. This will aid in timing the descent for touchdown.

During the landing, as the aircraft nears the deck for touchdown, the pilot must evaluate the rate of yaw and anticipate any changes that may occur (as a result of wind effects or power changes) as the aircraft touches down. The pilot must remember to include a scan out toward the horizon to ensure the aircraft (and therefore the skids) are remaining level for touchdown and that no lateral drift is developing.

Safety Notes

1. Always remember that ***the pedals work and shall be used if conditions warrant.*** The flying pilot shall make pedal inputs as needed to maintain safe flight parameters at all times. In addition, the instructor pilot at any time can call for control of pedals to make necessary inputs. This control change shall be initiated positively without delay. Do not forego needed pedal

inputs for the sake of the simulation. Moreover, if the flying pilot feels uncomfortable with the maneuver at any time, regardless of the severity of the maneuver, he or she is encouraged to use the pedals and abort the maneuver.

2. While airborne, the aircraft needs to be kept in a level attitude as it rotates, especially near the deck. Failure to do so will make recovery more difficult and can unnecessarily decrease stinger ground clearance.

3. The aircraft may slide and/or yaw as the aircraft touches down. In this case, it is critical to use all controls—***including pedals if necessary***—to prevent an unsafe roll condition from developing.

4. The friction of the skids on the pavement will assist in controlling the yaw as the aircraft settles. It should also be noted that the corresponding decrease in torque created by lowering the collective for touchdown may decrease a right yaw and may increase a left yaw.

5. Heading changes during this maneuver should not exceed 90 degrees from the wind line. A headwind component should be maintained. If these conditions cannot be maintained, use pedals to stop the rotation and abort the maneuver. Attempt the maneuver again using smaller power changes.

6. This maneuver shall be performed by IPs and IUTs only. This maneuver shall not be performed by SMAs.

7. The wind line may be used to aid in controlling yaw rate, however, there is no requirement to land the aircraft directly into the wind line as long as NATOPS limitations are not exceeded.

606. SIMULATED COMPLETE LOSS OF T/R THRUST IN A HOVER – (DEMO ONLY)

Maneuver Description.

1. To develop the proper procedures required to enable the pilot to recover from a tail rotor failure in a hover.

2. Refer to the NATOPS Manual Emergency Procedures chapter.

Procedures

1. Discuss the necessity for a skids-level attitude.

2. Stabilize the helicopter in a stable 5 foot hover heading 90º left of the windline.

3. Instructor will neutralize the pedals, PAC- ***"Initiating 3-2-1."*** Then PAC (IP) neutralizes pedals (simulating loss of tail rotor thrust) to commence a right rotation about a vertical axis.

4. As the aircraft comes into the windline, rotate the twist grip to flight idle, hold the pedals and collective position constant. The rotation should slow to a stop shortly after reducing the twist grip to flight idle. Additional aerodynamic stability is gained as the tailboom and vertical stabilizer approach the windline at the nine o'clock position.

CAUTION

1. If rotation is excessive, use left pedal to slow or stop rate of rotation and abort the maneuver. Attempt maneuver again with less addition of right pedal to neutralize.

2. Rapid application of left pedal to arrest excessive rotation could cause over torque. Ensure moderate neutralization of pedals with winds above 15 KTS.

3. Advancing twist grip after reduction for the maneuver could cause over torque and excessive acceleration of yaw.

5. Cushion with collective, follow rotation on the ground with right forward cyclic as necessary or hold cyclic constant.

Crew Resource Management

Instructor Pilot discusses necessity for a level attitude at touchdown. (Mission Analysis)

Safety Notes and Common Student Errors

1. A skids-level attitude must be maintained to eliminate drift.

2. The maneuver will be completed on a hard surface.

3. The maneuver will only be demonstrated to SMAs.

4. IUTs will be required to do the maneuver when undergoing training with a standardization instructor.

5. If IP/PAC feels uncomfortable with the maneuver, they are encouraged to use the pedals and abort the maneuver.

607. SIMULATED FIXED PITCH PEDAL POSITION IN A HOVER – LEFT YAW - (DEMO ONLY)

Maneuver Description. This maneuver begins as the pilot fixes the pedals with a ***mild,*** left rotation established. Since the rotation is not excessive, the pilot should not rush a recovery. Instead, the pilot should evaluate the wind and note how the wind effects the aircraft's rotation. If the rotation is mild enough, it may be possible to recover by simply lowering the collective to make a controlled landing while keeping the twist grip full open (as in the "SIMULATED

FIXED PITCH PEDAL POSITION IN A HOVER –NO YAW" maneuver). Otherwise, the pilot will recover by smartly increasing and decreasing collective as needed to gain control of aircraft heading and effect a landing. This technique takes advantage of the delay in the change in yaw that occurs following a change in power. Refer to the NATOPS Manual Emergency Procedures chapter.

Application. There are two primary purposes for this maneuver. The first is to increase the pilot's proficiency to recover from a fixed-pedal, left-yaw condition in a hover. The second is to give the pilot the ability to analyze the severity of the malfunction and apply the proper recovery procedures at the appropriate time given a unique set of conditions (winds, DA, gross weight, severity of yaw rate, etc.).

Procedures

1. Establish a stable hover at a 5-foot skid height into the wind line over a smooth, paved surface. Initiate a controlled rotation to the left and then freeze pedal position once desired yaw rate is obtained. Announce, ***"Pedals frozen."***

2. Determine if the rate of rotation is mild enough to allow for a safe landing using a collective reduction only.

If rotation is excessive for landing:

3. Initiate recovery by smoothly and smartly increasing collective to counter the left yaw. Expect the yaw to slow as the aircraft climbs.

4. With the left yaw stopped, smoothly and smartly decrease collective to set up for landing.

5. Do not rush the landing. If an excessive left yaw develops prior to landing, increase collective to reduce the rotation and regain altitude. Repeat this step until acceptable yaw conditions are established for landing. Be patient and expect to repeat this action multiple times. The goal should be to arrive in a momentary 2-3 foot hover with little to no rotation before initiating landing.

6. Eliminate any lateral drift with cyclic as the aircraft settles. Once both skids have touched down, use cyclic to maintain level skids. Continue to smoothly lower the collective once on deck to keep yaw under control and transfer the aircraft weight to the skids. Maintain positive control of yaw until collective is full down.

If rotation is not excessive for landing:

7. Lower collective to effect a landing.

Crew Resource Management

The IP discusses the importance of maintaining a mild, controlled yaw rate and for keeping a level attitude during touchdown. (Mission Analysis)

Amplification and Technique

This recovery takes advantage of the fact that the change in lift created by collective movement occurs before a change in yaw, allowing the aircraft to descend to a position for landing before an excessive left yaw develops.

NOTE

Because of this delay, the pilot must lead collective inputs to avoid over-controlling the heading.

The recovery will typically require several smooth, delayed "pumps" of the collective, alternating power increases and decreases, to work the aircraft into a position for landing. An ideal position to initiate a landing is a 2-3 foot hover with the nose aligned slightly left of the wind line. However, wind line should not be a primary consideration. The primary goal is to achieve a low, stable hover that will allow a positive—***but controlled***—collective reduction to get the skids on the deck before a significant left yaw develops.

Some mild yaw can be tolerated as the aircraft touches down. The friction of the skids on the pavement will assist in controlling the yaw as the aircraft settles. If the rate of yaw is mild enough, a power-on landing (twist grip full open) may be accomplished without having to make the initial aggressive collective pull. Instead, simply lower the collective in a controlled manner to effect a safe landing.

Safety Notes

1. Always remember that the pedals work and shall be used if conditions warrant. The flying pilot shall make pedal inputs as needed to maintain safe flight parameters at all times. In addition, the instructor pilot at any time can call for control of pedals to make necessary inputs. This control change shall be initiated positively without delay. Do not forgo needed pedal inputs for the sake of the simulation. Moreover, if the flying pilot feels uncomfortable with the maneuver at any time, regardless of the severity of the maneuver, he or she is encouraged to use the pedals and abort the maneuver.

2. In an actual emergency condition, the recovery may be initiated as soon as the condition is positively identified and conditions permit. However, during this simulation, the crew should consider making multiple full rotations to enhance the pilot's ability to analyze the stuck pedal condition and the effects of wind on the condition.

3. Do not rush the landing. It is likely, depending on gross weight, DA, and wind conditions, that more than one iteration may be needed to accomplish the landing. For initial training,

several iterations are recommended to allow the pilot to get a feel for the lag in the change in torque compared to the change in lift as power is increased/decreased. This will aid in timing the descent for touchdown.

4. The aircraft may slide and/or yaw as the aircraft touches down. In this case, it is critical to use all controls—***including pedals if necessary***—to prevent an unsafe roll condition from developing.

5. The friction of the skids on the pavement will assist in controlling the yaw as the aircraft settles. It should also be noted that the corresponding decrease in torque created by lowering the collective for touchdown may decrease a right yaw and may increase a left yaw.

6. During initial recovery, collective application must be rapid ***but controlled.*** Too rapid or too large of an application can result in an overtorque or the creation of excessive yaw in the opposite direction.

7. During portions of the recovery, the aircraft may be in a high hover. Minimize the time spent in this region.

8. Do not exceed NATOPS turn rate limitations. If rotation is nearing NATOPS limits, then the yaw rate is excessive. The desired rate should be controlled and relatively comfortable. If rotation becomes excessive or aircraft control becomes questionable, use pedals to stop the rotation and abort the maneuver. Attempt the maneuver again with less addition of left pedal.

9. In moderate and/or gusty wind conditions, the pedals may require some minor manipulation (even after the "pedals frozen" call) to keep a reasonable yaw rate and to avoid exceeding NATOPS limits.

10. While still airborne, the aircraft needs to be kept in a level attitude as it rotates, especially near the deck. Failure to do so will make recovery more difficult and can unnecessarily decrease tail skid ground clearance.

11. The wind line may be used to aid in controlling yaw rate; however, there is no requirement to land the aircraft into the wind line as long as NATOPS limitations are not exceeded.

608. SIMULATED FIXED PITCH PEDAL POSITION IN A HOVER – RIGHT YAW - (DEMO ONLY)

Maneuver Description. This maneuver begins as the pilot fixes the pedals with a ***mild***, right rotation established. Since the rotation is not excessive, the pilot should not rush a recovery. Instead, the pilot should evaluate the wind and note how the wind affects the aircraft's rotation. If the rotation is mild enough, it may be possible to recover by simply lowering the collective to make a controlled landing while keeping the twist grip full open (as in the "SIMULATED FIXED PITCH PEDAL POSITION IN A HOVER –NO YAW" maneuver.) Otherwise, at the appropriate time, the pilot will recover by smoothly reducing the twist grip to flight idle to counter the right yaw and use cyclic and collective to maintain a controlled landing profile.

Refer to the NATOPS Manual Emergency Procedures chapter.

Application. There are two primary purposes for this maneuver. The first is to increase the pilot's proficiency to recover from a fixed-pedal, right-yaw condition in a hover. The second is to give the pilot the ability to analyze the severity of the malfunction and apply the proper recovery procedures at the appropriate time given a unique set of conditions (winds, DA, gross weight, severity of yaw rate, etc.).

Procedures

1. Establish a stable hover at a 3-foot skid height into the wind line over a smooth, paved surface. Initiate a controlled rotation to the right and then freeze pedal position once desired yaw rate is obtained. Announce, ***"Pedals frozen."***

2. Determine if the rate of rotation is mild enough to allow for a safe landing using a collective reduction only.

If rotation is excessive for landing:

3. As the nose approaches the wind line, initiate recovery by smoothly rotating twist grip to flight idle.

CAUTION

The twist grip motion must be smooth and without interruption from full open to flight idle to prevent damaging aircraft vibrations and operations in the restricted N_f ranges.

4. Use cyclic to eliminate drift. As the skids touch down, maintain a skid-level attitude until maneuver is complete.

5. Use collective to cushion the landing.

If rotation is not excessive for landing:

6. Lower collective to effect a landing.

Crew Resource Management

The IP discusses the importance of maintaining a mild, controlled yaw rate, for rotating the twist grip at the appropriate altitude (3 feet), and for maintaining a level attitude during touchdown. (Mission Analysis)

Amplification and Technique

If the rate of yaw is mild enough, a power-on landing (twist grip full open) may be accomplished by simply lowering the collective in a controlled manner to effect a safe landing. Experience with other maneuvers (especially the SIMULATED FIXED PITCH PEDAL POSITION IN A HOVER –NO YAW maneuver) will aid in determining if the rate of rotation will permit a landing while keeping the twist grip full open. If yaw builds to an unacceptable level while a power-on landing is attempted (with twist grip full open), the pilot can increase collective to gain altitude and initiate the procedures again, beginning with step 2. As always, either pilot can always use pedals at any point to abort the maneuver, reestablish a hover with pedals, and reattempt the maneuver as needed.

The recovery using twist grip reduction takes advantage of the fact that right yaw can be reduced or stopped by the loss of torque that occurs as the twist grip is reduced to flight idle. It is important to keep the aircraft no higher than a 3-foot skid height as the recovery is initiated to minimize the time the aircraft remains airborne after twist grip is rotated to idle. The sudden loss of torque with twist grip reduction can be significant enough to stop the right rotation and actually induce a left yaw (depending on pedal position, gross weight, wind conditions, rate of twist grip reduction, etc.). The longer the aircraft is kept airborne unnecessarily after the twist grip is reduced to idle, the more likely the left yaw will develop.

Some mild yaw can be tolerated as the aircraft touches down. The friction of the skids on the pavement will assist in controlling the yaw as the aircraft settles. The corresponding decrease in torque created by lowering the collective for touchdown may increase or decrease the yaw rate depending on direction of rotation.

Safety Notes

1. Always remember that ***the pedals work and shall be used if conditions warrant***. The flying pilot shall make pedal inputs as needed to maintain safe flight parameters at all times. In addition, the instructor pilot at any time can call for control of pedals to make necessary inputs. This control change shall be initiated positively without delay. Do not forgo needed pedal inputs for the sake of the simulation. Moreover, if the flying pilot feels uncomfortable with the maneuver at any time, regardless of the severity of the maneuver, he or she is encouraged to use the pedals and abort the maneuver.

2. In an actual emergency condition, the recovery may be initiated as soon as the condition is positively identified and conditions permit. However, during this simulation, the crew should consider making multiple rotations to enhance the pilot's ability to analyze the stuck pedal condition and the effects of wind on the condition. Multiple rotations will also increase the pilot's ability to maintain a stable, level right rotation.

3. While airborne, the aircraft needs to be kept in a level attitude as it rotates, especially near the deck. Failure to do so will make recovery more difficult and can unnecessarily decrease stinger ground clearance. A common tendency is to pull aft cyclic and allow the nose to rise during the rotation. During initial training, it is recommended to simply practice making level

hovering rotations at 3 feet to become proficient in keeping a level aircraft during recovery.

4. The aircraft may slide and/or yaw as the aircraft touches down. In this case, it is critical to use all controls—***including pedals if necessary***—to prevent an unsafe roll condition from developing.

5. The friction of the skids on the pavement will assist in controlling the yaw as the aircraft settles. It should also be noted that the corresponding decrease in torque created by lowering the collective for touchdown may decrease a right yaw and may increase a left yaw.

6. To minimize the left yaw at touchdown, avoid rolling the twist grip to flight idle above 3 feet.

7. Do not exceed NATOPS turn rate limitations. If rotation is nearing NATOPS limits, then the yaw rate is excessive. The desired rate should be controlled and relatively comfortable. If rotation becomes excessive or aircraft control becomes questionable, use pedals to stop the rotation and abort the maneuver. Attempt the maneuver again with less addition of right pedal.

8. In moderate and/or gusty wind conditions, the pedals may require some minor manipulation (even after the "pedals frozen" call) to keep a reasonable yaw rate and to avoid exceeding NATOPS limits.

9. The wind line may be used to aid in controlling yaw rate; however, there is no requirement to land the aircraft into the wind line as long as NATOPS limitations are not exceeded.

10. Advancing the twist grip after reducing to flight idle can cause an overtorque.

11. It is common for the LOW NR horn and warning light to activate during recovery after twist grip is reduced to idle.

12. The twist grip motion must be smooth and without interruption from full open to flight idle to prevent the onset of damaging aircraft vibrations and operations in the restricted N_f ranges.

609. SIMULATED FIXED PITCH PEDAL POSITION AT ALTITUDE– LOW POWER (DEMO ONLY)

Maneuver Description. The pilot sets up the maneuver to simulate fixed pedals in a low-powered, forward flight condition. The approach and flare should create a left yaw on final as power is reduced. On short final, the nose will rotate to the right due to the increase in torque created by increasing the collective to arrest the rate of descent and groundspeed. Once in a hover, the pilot will recover using the appropriate ***simulated fixed pitch pedal position in a hover*** recovery procedures. Refer to the NATOPS Manual Emergency Procedures chapter.

Application. There are two primary purposes for this maneuver. The first is to increase the pilot's proficiency to recover from a fixed-pedal, low-power condition in forward flight. The second is to give the pilot the ability to analyze the severity of the malfunction and apply the

proper recovery procedures at the appropriate time given a unique set of conditions (winds, DA, gross weight, severity of yaw rate, etc.).

Procedures

1. This maneuver shall be flown to a runway. Prior to takeoff, establish a hover at 5-foot skid height into the wind near intended point of landing and note torque.

2. Fly the pattern at 500 feet AGL. On downwind, slow to 50 KIAS, set torque at 10 to 40% below hover torque (at IP's discretion), and center the ball. Freeze pedals in this position and announce **"*Pedals frozen*."**

3. Set up for a straight-in steep approach (at 500 feet AGL) to the intended point of landing. Maintain 500 feet AGL and 60 KIAS on final. Maintain no less than 60 KIAS until landing area is assured.

4. When runway is made, lower collective to the full down position. Despite the low power stuck pedal condition, the nose should yaw to the left as nearly all torque is removed.

NOTE

If the nose is not yawed left to some degree during the steady-state descent, terminate the maneuver, and conduct a waveoff. Verify correct setup procedures, ensure conditions (winds, gross weight, etc.) are optimized as much as practical, and reattempt as desired, adjusting torque settings at IP's discretion. If still unable to achieve a left yaw in the descent, do not attempt to complete the maneuver.

Excluding the left yaw, the sight picture will resemble an autorotative profile, except the twist grip will remain full open during the descent. Expect a descent rate and glideslope similar to an autorotation. Because of the unbalanced condition the descent rate will be higher than a balanced autorotation.

5. During the descent, use the cyclic to achieve the desired glideslope and to maintain groundspeed. Groundspeed should remain near constant (typically between 50-60 KIAS) from the top of the glideslope until the flare. Do ***NOT*** decelerate below 50 KIAS until the flare.

6. Initiate a smooth flare to arrive at approximately 3 feet above the runway with little to no groundspeed and minimum descent rate.

NOTE

The altitude at which the flare is initiated can vary depending on conditions (wind, groundspeed, rate of descent, DA, etc.), but typically should be no higher than 50 feet AGL.

CAUTION

To avoid excessive rate of descent and/or nose high attitude on short final, avoid over-flaring or ballooning in the flare.

NOTE

Expect a nose high and nose left attitude toward the end of the approach. Depending on conditions, the nose may yaw significantly to the left as the aircraft decelerates. If yaw approaches approximately 70 degrees left, use right pedal to prevent further left yaw.

7. As the aircraft begins to settle near the end of the flare (usually 10-15' AGL), increase collective to eliminate the remaining descent rate and ground speed.

8. As the aircraft approaches zero groundspeed, use forward cyclic to level the aircraft and terminate the approach in a hover.

CAUTION

Due to the nose high, nose left attitude on short final, tail skid clearance will be lower than normal. If the pilot is late to level the aircraft, a tail skid strike becomes increasingly possible.

NOTE

The tendency is to level too quickly (carried over from the autorotation sight picture) resulting in undesirable groundspeed at the bottom. Be patient. The key to a successful recovery is timing the flare to avoid an excessive tail low attitude near the deck prior to leveling the aircraft and any groundspeed after reaching a level attitude.

9. As right yaw develops as collective is increased, initiate landing by rotating twist grip to flight idle.

CAUTION

If groundspeed exists after completing the approach, the crew should consider terminating the maneuver at five feet using pedals as needed. A landing using twist grip reduction shall not be attempted unless a zero or near-zero groundspeed is achieved.

To avoid a hard landing, twist grip reduction to flight idle—***if required—must be initiated between 3 and 5 feet. Twist grip reduction shall not be initiated above 5 feet.*** The instructor must be vigilant to prevent early twist grip rotation.

Advancing the twist grip after reducing to flight idle may cause an overtorque.

If groundspeed develops after rotating the twist grip to flight idle and the nose is not aligned with the direction of travel, the crew shall utilize pedals as necessary to make a safe landing.

NOTE

For training purposes, the instructor may elect to terminate in a hover or slow taxi—***using pedals to recover***—vice applying the hover recovery procedures. This will give the aircrew the opportunity to focus on the approach portion of the maneuver.

This intent should be briefed on downwind or before using the phrase ***"Recovery with Pedals."*** (For example, on downwind the pilot or IP will state: "This approach will use a Recovery with Pedals.") With this call, twist grip reduction shall not be considered and the pilot shall use pedals as needed to terminate in a controlled hover.

A moderate and increasing right yaw is likely with this maneuver. However, a mild right yaw is possible with favorable conditions (strong left crosswind, mild fixed pedal condition, etc.). In this case, a power on landing (without using twist grip) should be considered.

10. Use cyclic to eliminate drift. If yaw exists, ensure skids are level prior to touchdown and maintain the skid-level attitude until maneuver is complete.

11. Use collective to cushion the landing.

Crew Resource Management

1. The Instructor Pilot discusses the importance of sufficiently leveling the aircraft to prevent a tail low attitude near the deck, achieving a zero-groundspeed hover, avoiding an early/high rotation of twist grip to flight idle, and maintaining a level attitude during touchdown (Mission Analysis).

2. During the descent, it is recommended that the non-flying pilot call out altitudes in AGL, if desired by the flying pilot. (Situational Analysis)

Application and Technique

With this condition, the crew must expect and be prepared for a moderate to strong right yaw to develop as the approach is completed. By finishing in a zero or near-zero groundspeed hover, these procedures allow the crew to apply the "fixed pedal in a hover-right yaw" recovery procedures, as needed, to safely recover from the fixed-pedal condition. For this reason, it is important to terminate the approach no higher than 3 feet skid height to allow the safe reduction of twist grip to flight idle as the nose begins to rotate to the right.

Some mild yaw can be tolerated as the aircraft touches down. The friction of the skids on the pavement will assist in controlling the yaw as the aircraft settles. The corresponding decrease in torque created by lowering the collective for touchdown will aid in decreasing any remaining right yaw, and can potentially generate a left yaw, depending on conditions. In the less likely case that the rate of right yaw is minimal after completing the approach, a power-on landing (with twist grip full open) may be accomplished by simply lowering the collective in a controlled manner to effect a safe landing.

Safety Notes and Common Student Errors

1. Always remember that ***the pedals work and shall be used if conditions warrant*.** The flying pilot shall make pedal inputs as needed to maintain safe flight parameters at all times. In addition, the instructor pilot at any time can call for control of pedals to make necessary inputs. This control change shall be initiated positively without delay. Do not forgo needed pedal inputs for the sake of the simulation. Moreover, if the flying pilot feels uncomfortable with the maneuver at any time, regardless of the severity of the maneuver, he or she is encouraged to use the pedals and abort the maneuver.

2. Set up for landing to a runway with a headwind (ideally ***left*** of centerline). If the nose is not yawed left to some degree during the steady-state descent, terminate the maneuver and execute a waveoff. Verify correct setup procedures, ensure conditions (winds, gross weight, etc.) are optimized, and reattempt as desired, adjusting torque settings as needed. If still unable to achieve a left yaw in the descent, do not attempt to complete the maneuver.

3. The range of torque provided in the maneuver setup (10-40% below hover torque) provides the crew control over the severity of right yaw in the hover and to also practice different fixed pedal positions. During initial training, a higher power setting should be utilized to minimize the right rotation.

4. Expect a moderate to strong right rotation to begin to develop as power is added to attain a hover. The crew shall always be prepared to arrest any right yaw with twist grip reduction at the appropriate altitude and groundspeed.

5. Advancing the twist grip after reducing to flight idle may cause an overtorque.

6. The goal is to terminate the approach and enter the hover at a 3-foot skid height, over the runway, with no groundspeed. There is no requirement to land the aircraft into the wind line or

aligned with runway heading, nor should it be a goal for the pilot. The aircraft may be landed out of the wind line as long as NATOPS wind limitations are not exceeded.

7. The aircraft may slide and/or yaw as the aircraft touches down. In this case, it is critical to use all controls—***including pedals if necessary***—to prevent an unsafe roll condition from developing.

8. It is common for the LOW NR horn and warning light to activate during recovery after twist grip is reduced to idle.

9. The twist grip motion must be smooth and without interruption from full open to flight idle to prevent the onset of damaging aircraft vibrations and operations in the restricted N_f ranges.

10. A simulated fixed-pedal waveoff may be executed for training at the discretion of the IP. Conduct a simulated waveoff early by lowering the nose towards the deck, enter ground effect as necessary, and allowing airspeed to build to counter any right yaw. Initiate the climb with collective. If right yaw becomes excessive during the waveoff, terminate the maneuver and execute normal waveoff procedures.

11. When practicing multiple approaches simulating the same fixed pedal positions, the pedals may be repositioned by visually resetting them to the same position on downwind and announcing ***"Pedals frozen."***

12. The intent of the HIGE torque check in step 1 is to get a "real time" indication of HIGE power while exposed to the current conditions (i.e., with current winds across the deck at the OLF). It does not have to occur over the intended landing runway—just at a point on the field that is exposed to the same winds as the landing runway.

610. SIMULATED FIXED PITCH PEDAL POSITION AT ALTITUDE –HIGH POWER (DEMO ONLY)

Maneuver Description. The pilot sets up the maneuver to simulate fixed pedals in a high-powered, forward flight condition. The approach and flare will create a left yaw on final as power is reduced. On short final, the nose will typically rotate to the right due to the increase in torque created by increasing the collective to arrest the rate of descent and groundspeed. However, depending on the conditions (wind, pedal position, gross weight, etc.), a left rotation is possible. Once in a hover, the pilot will recover using the appropriate ***simulated fixed pedal in a hover*** recovery procedures. Refer to the NATOPS Manual Emergency Procedures chapter.

Application. There are two primary purposes for this maneuver. The first is to increase the pilot's proficiency to recover from a fixed-pedal, high-power condition in forward flight. The second is to give the pilot the ability to analyze the severity of the malfunction and apply the proper recovery procedures at the appropriate time given a unique set of conditions (winds, DA, gross weight, severity of yaw rate, etc.).

Procedures

1. This maneuver shall be flown to a runway. Prior to takeoff, establish a hover at 5-foot skid height into the wind near intended point of landing and note torque.

2. On initial climb out, stabilize at 50 KIAS, set torque at 5 to 15% above hover torque (at IP's discretion) not to exceed 80%, and center the ball. Freeze pedals in this position and announce ***"Pedals frozen."*** Fly the pattern at 500 feet AGL.

NOTE

The setup can be accomplished on downwind, but due to the increased workload, the climb out method is recommended.

3. Fly a normal approach to the 90 position. Set up to the intended point of landing using a 20-30 degree glideslope on final. The nose should be yawed left. Do not decelerate below 50 KIAS until initiating the flare.

4. With the landing area made, initiate a gradual flare to arrive at approximately 3 feet above the runway with little to no groundspeed and minimum descent rate.

NOTE

The altitude that the flare is initiated can vary depending on conditions (wind, groundspeed, rate of descent, DA, etc.), but typically should be no higher than 50 feet AGL.

5. As the flare is initiated, lower the collective as necessary to maintain glideslope. Typically, this will force the nose further left, aiding in recovery.

CAUTION

To avoid excessive rate of descent on short final, coordinate cyclic and collective to avoid over-flaring or ballooning in the flare.

NOTE

Expect a nose high and nose left attitude toward the end of the approach. Depending on conditions, the nose may yaw significantly to the left as the aircraft decelerates. If yaw approaches approximately 70 degrees left, use right pedal to prevent further left yaw.

6. As the aircraft begins to settle near the end of the flare (usually 10-15 feet AGL), increase collective to eliminate the remaining descent rate and ground speed.

7. As the aircraft approaches zero groundspeed, use forward cyclic to level the aircraft and terminate the approach in a 3-foot hover.

CAUTION

Due to the nose high, nose left attitude on short final, tail skid clearance will be lower than normal. If the pilot is late to level the aircraft, a tail skid strike becomes increasingly possible.

NOTE

The tendency is to level too quickly (carried over from the autorotation sight picture) resulting in undesirable groundspeed at the bottom. Be patient. The key to a successful recovery is timing the flare to avoid an excessive tail low attitude near the deck prior to leveling the aircraft and any groundspeed after reaching a level attitude.

8. Entering the hover, yaw will likely develop, but depending on conditions, could be left or right. In this case, initiate the appropriate simulated hover fixed pedal recovery techniques.

CAUTION

If groundspeed exists after completing the approach, the crew should consider terminating the maneuver at five feet using pedals as needed. A landing using twist grip reduction shall not be attempted unless a zero or near-zero groundspeed is achieved.

Remember that twist grip reduction to flight idle is not required for a left yaw or potentially even a mild right yaw. Do not be conditioned to rotate the twist grip automatically.

To avoid a hard landing, twist grip reduction to flight idle—***if required***—must be initiated between 3 and 5 feet. ***Twist grip reduction shall not be initiated above 5 feet.*** The instructor must be vigilant to prevent early twist grip rotation.

Advancing the twist grip after reducing it to flight idle may cause an overtorque.

If groundspeed develops after rotating the twist grip to flight idle and the nose is not aligned with the direction of travel, ***the crew shall utilize pedals as necessary*** to make a safe landing.

NOTE

For training purposes, the instructor may elect to terminate in a hover or slow taxi—***using pedals to recover***—vice applying the hover recovery procedures. This will give the aircrew the opportunity to focus on the approach portion of the maneuver.

This intent should be briefed on downwind or before using the phrase ***"Recovery with Pedals."*** (For example, on downwind the pilot or IP will state: "This approach will use a Recovery with Pedals.") With this call, twist grip reduction shall not be considered and the pilot shall use pedals as needed to terminate in a controlled hover.

Crew Resource Management

The Instructor Pilot discusses the importance of sufficiently leveling the aircraft to prevent a tail low attitude near the deck, for achieving a zero groundspeed hover, for avoiding an early/high rotation of twist grip to flight idle, and for maintaining a level attitude during touchdown. (Mission Analysis)

Application and Technique

Depending on gross weight, groundspeed, wind conditions, and torque application, at the end of the approach the aircraft may stabilize in a hover or, more likely, begin a rotation in one direction or the other. By finishing in a zero or near-zero groundspeed hover, these procedures allow the crew to apply the appropriate ***"fixed pedal in a hover"*** recovery, as needed, to safely recover from the fixed-pedal condition. For this reason, it is important to terminate the approach no higher than 3 feet skid height to allow the safe reduction of twist grip to flight idle if the nose begins to rotate to the right. Differing rates of collective and cyclic inputs can be applied in the flare to achieve this end state, as long as the pilot avoids an excessive tail low attitude, an excessive rate of descent (i.e., "getting vertical") and any groundspeed as the approach is terminated.

Some mild yaw can be tolerated as the aircraft touches down, ***as long as the skids are kept level***. The friction of the skids on the pavement will assist in controlling the yaw as the aircraft settles. It should also be noted that the corresponding decrease in torque created by lowering the collective for touchdown may decrease a left yaw and may increase a right yaw.
The pilot needs to keep in mind that if the rate of yaw (left or right) is mild enough as the approach is terminated, a power-on landing (keeping the twist grip full open) may be accomplished by simply lowering the collective ***in a controlled manner*** to effect a safe landing.

Safety Notes and Common Student Errors

1. Always remember that ***the pedals work and shall be used if conditions warrant***. The flying pilot shall make pedal inputs as needed to maintain safe flight parameters at all times. In addition, the instructor pilot at any time can call for control of pedals to make necessary inputs. This control change shall be initiated positively without delay. Do not forgo needed pedal inputs for the sake of the simulation. Moreover, if the flying pilot feels uncomfortable with the maneuver at any time, regardless of the severity of the maneuver, he or she is encouraged to use the pedals and abort the maneuver.

2. Set up for landing to a runway with a headwind (ideally ***left*** of centerline). Do not allow the nose to yaw more than 10 degrees right of centerline while on final. If it does, terminate the maneuver and execute a waveoff. Make another attempt at the instructor's discretion, adjusting torque settings as needed.

3. A left yaw in a hover is the desired outcome of the maneuver, but not required. The range of torque provided in the maneuver setup (5-15% above hover torque) provides the crew the flexibility to encourage this condition and to also practice different fixed pedal positions. During initial training, a higher power setting should be utilized to minimize any right rotation.

4. Avoid getting too steep on final. Doing so can create an excessive nose-left attitude on final as flare is initiated.

5. Because of the possibility of a right yaw developing in the hover, the crew must always be prepared to properly arrest any right yaw with twist grip reduction.

6. Advancing the twist grip after reducing to flight idle may cause an overtorque.

7. The goal is to terminate the approach and enter the hover at a 3-foot skid height, over the runway, with no groundspeed before entering the hover. There is no requirement to land the aircraft into the wind line or aligned with runway heading, nor should it be a goal for the pilot. The aircraft may be landed out of the wind line as long as NATOPS wind limitations are not exceeded.

8. The aircraft may slide and/or yaw as the aircraft touches down. In this case, it is critical to use all controls—***including pedals if necessary***—to prevent an unsafe roll condition from developing.

9. It is common for the LOW NR horn and warning light to activate during recovery after twist grip is reduced to idle.

10. The twist grip motion must be smooth and without interruption from full open to flight idle to prevent the onset of damaging aircraft vibrations and operations in the restricted N_f ranges.

11. A simulated fixed-pedal waveoff may be executed for training at the discretion of the IP. Conduct a simulated waveoff early by lowering the nose towards the deck, enter ground effect as necessary, and allowing airspeed to build to counter any right yaw. Initiate the climb with collective. If right yaw becomes excessive during the waveoff, terminate the maneuver and execute normal waveoff procedures.

12. When practicing multiple approaches simulating the same fixed pedal positions, the pedals may be repositioned by visually resetting them to the same position and announcing ***"Pedals frozen."***

13. The intent of the HIGE torque check in step 1 is to get a "real time" indication of HIGE power while exposed to the current conditions (i.e., with current winds across the deck at the OLF). It does not have to occur on the intended landing runway—just at a point on the field that is exposed to the same winds as the landing runway.

611. POWER OFF WAVEOFF (DEMO ONLY)

Maneuver Description. The power off waveoff enables the pilot to terminate a simulated emergency procedure or autorotative descent and transition to a normal climb/forward flight.

Application. The power off waveoff is a transition from any situation where the twist grip is not in the full open position to a power on climb/forward flight.

PROCEDURES

1. Time and altitude permitting:

   a. Smoothly lower the collective to the full down position.

   b. With collective full down, smoothly rotate the twist grip to the full open position and check for normal acceleration. PAC shall verbalize, **"TWIST GRIP FULL OPEN."** PNAC shall confirm and verbalize, **"ROGER, TWIST GRIP FULL OPEN."**

   c. Increase collective as necessary to arrest rate of descent.

   d. Adjust the nose to the appropriate attitude and use collective to establish a 70 KIAS, 500-700 FPM climb, and maintain balanced flight.

   e. Both pilots shall continuously clear the aircraft during climbout.

2. Time and altitude not permitting:

   a. Smoothly rotate the twist grip to the full open position while simultaneously increasing the collective and check for normal acceleration. PAC shall verbalize, **"TWIST GRIP FULL OPEN."** PNAC shall confirm and verbalize, **"ROGER, TWIST GRIP FULL OPEN."**

   b. Continue to increase collective as necessary to arrest rate of descent.

   c. Adjust the nose to the appropriate attitude and use collective to establish a 70 KIAS, 500-700 FPM climb, and maintain balanced flight.

   d. Both pilots shall continuously clear the aircraft during climbout.

WARNING

Lowering the collective to avoid an overtorque may create or exacerbate an unsafe flight profile. An overtorque is preferable to damage or destruction of the aircraft.

CAUTION

In flight, avoid a pausing or creeping movement while increasing or decreasing the twist grip between the FLIGHT IDLE and FULL OPEN positions. If the movement is not made at a firm and continuous rate, N_g underspeed and/or oscillation may occur. This may cause a momentary and false ENG OUT warning indication.

Crew Resource Management

1. PAC or PNAC initiates waveoff using appropriate procedures, if uncomfortable with the maneuver. (Decision Making)

2. PAC performs waveoff when a crewmember calls "Waveoff." (Adaptability/Flexibility)

3. PAC and PNAC ensure twist grip is positioned to full open. (Situational Awareness)

4. PAC/PNAC monitors rotor RPM, TOT, and torque. (Situational Awareness)

5. PAC makes appropriate radio call, as required, upon establishing positive rate of climb and balanced flight. (Communication)

Amplification and Techniques

1. After increasing the collective to stop the rate of descent (in most cases, initially setting 50% torque will significantly slow or stop the rate of descent), adjust the nose to the 70 KIAS climbing attitude and adjust collective to at least 70% torque in order to establish a 500 to 700 FPM climb (i.e. "70, 70, ball, call"). Maintain balanced flight.

2. Closely monitor rotor RPM, TOT and torque when executing a waveoff. For example, increasing collective with the twist grip partially open will result in dangerously low RPM and a high TOT condition not conducive to safe flight. Until normal waveoff engine power is assured, maintain the aircraft within safe autorotational parameters.

3. Execute the maneuver smoothly, yet positively.

Common Error and Safety Notes

1. Ensure twist grip is full open.

2. Failure to transition to the 70 KIAS climbing attitude.

3. Failure to maintain balanced flight.

4. Failure to maintain climb at 500 to 700 FPM.

5. Failure to keep torque within limits.

CHAPTER SEVEN
EMERGENCY PROCEDURES

700. INTRODUCTION

Learning emergency procedures is a necessary aspect of flying naval aircraft that is by no means an insurmountable task. To enhance the safety of flying, all aviators should be thoroughly knowledgeable of the procedures contained in the applicable NATOPS manual for coping with the various emergencies that may be encountered during operation of the aircraft. Moreover, all pilots should be thoroughly aware of the capabilities and limitations of their aircraft. Only then will the pilot possess the foundation necessary to adequately and safely cope with any emergency situation or condition encountered in flight. To attain this level of achievement and confidence, students will be exposed to simulated emergency training, simulated engine failures, simulated caution and warning lights, simulated system malfunctions and irregular single instrument indications.

701. LEARNING EMERGENCY PROCEDURES

The emergency procedures required for this aircraft are discussed in the emergencies section of the NATOPS Flight Manual. In all emergency procedures, regardless of the type aircraft, the following axiom applies: * * AVIATE * * NAVIGATE * * COMMUNICATE * *. The Contact Stage of Advanced Helicopter Training is primarily concerned with the first of these three steps. When learning to "aviate" in emergency conditions, use the following approach to set priorities and make decisions.

Emergencies fall in two categories, those requiring immediate pilot reaction in order to prevent further difficulty and those that do not. Proper resolution of an abnormal condition is dependent on immediate and accurate distinction between the two categories. In order to make this immediate and accurate distinction, consider this fact: in order to fly, a pilot needs an airworthy airframe, must be able to control the airframe, and needs power to keep it aloft. Therefore, any loss of power, control, or structural integrity requires immediate action. In general, any other abnormalities are of a non-critical nature. Take a moment to examine the table of contents for the EP section of your NATOPS Manual, and think about how the procedural steps are geared toward either: 1) maintaining or regaining power available, 2) maintaining or regaining N_r, cyclic control, or tail rotor authority, or 3) minimizing further damage and getting the aircraft on deck. Not all situations requiring immediate action are listed in the EP section. Examples of these emergencies are vortex ring state, unusual attitudes, and bird strikes. Additionally, not all emergency situations arise from aircraft malfunctions.

The critical emergencies discussed in the preceding paragraph require immediate identification and reaction. The second category of emergencies, the non-critical group, consists of those indications of an impending failure, which, if not analyzed and handled quickly, could develop into a "critical" or "immediate response" situation. Examples of these situations are instrument and caution panel indications, sounds, and vibrations.

These situations afford the pilot a few moments to analyze the malfunction, minimize impact, and fly to a controlled landing.

When, after a few moments of careful analysis, the pilot determines the abnormal indications will not likely develop into one of the two categories of emergencies discussed above, the pilot will initiate action for a "system failure." The required action may range from altering or aborting the planned mission to merely noting the problem for maintenance action, then continuing as planned.

Throughout his/her training, a student will be quizzed on emergency procedures and practice responding to simulated emergencies in flight. When discussing EPs, the student shall assume that unless otherwise stated by the instructor, the student is at the controls in daytime VMC at the time of malfunction.

In the Contact Stage of instruction, the student should consider the following factors when responding:

1. Identify the malfunction, given a set of indications.

    a. On deck, recite all memory items, call for the Pocket Checklist (PCL) and be familiar with (do not memorize) all non-memory items from NATOPS checklists.

    b. In flight, recite and perform (or simulate performing) all memory items and call for the PCL.

2. The PNAC shall open the Pocket Checklist to the appropriate page using tabs.

3. PAC directs the PNAC to perform the landing checklist.

4. Communicate, as appropriate. The PAC directs the PNAC to simulate a radio call informing external agencies of the location of the aircraft, the nature of the emergency, and aircrew's intentions.

In other stages of training, students will be expected to consider additional factors such as crew, environment, other aircraft, and controlling agencies, as discussed in the corresponding FTIs.

702. SINGLE INSTRUMENT INDICATIONS

Beginning early in the Contact phase of your training, you will be exposed to numerous simulated emergency situations that will require appropriate action on your part. You will be required to cope with one or more simulated emergency conditions on every flight. Specifically, simulated irregular single instrument indications will be presented to the Student Military Aviator to challenge his/her knowledge of the system and evaluate headwork and procedures involved in correctly responding to the situation presented.

Single instrument indications involve the engine performance instruments and caution and warning lights. For example, in one case the instructor may ask, "What would you do if the torque meter suddenly fell to zero," or perhaps, "assume the N_f needle on the dual tachometer falls to zero." Additionally, simulated over-temps, loss of pressure, and abnormal indications on the various flight instruments will challenge the student to analyze the fault and indicate to the instructor the proper procedure to adequately cope with the particular emergency. Basically, in preparing for single instrument simulated emergencies, you should consider each flight instrument and ask yourself the question, what would I do if this instrument fell to zero, or exceeds maximum or normal operating limits? Then, and only then, will you be adequately prepared to meet any contingency and fly the aircraft safely.

703. SIMULATED EMERGENCIES AT ALTITUDE/SITE

Maneuver Description. Simulated emergencies are instructor initiated maneuvers designed to analyze the student's understanding of and proper response to various simulated emergency conditions or situations.

Application. Simulated emergencies are practiced on every flight to challenge the student's knowledge of systems malfunctions and evaluate the headwork, basic airwork and procedures involved in correctly responding to various simulated emergency conditions or situations.

Procedures

1. The instructor will initiate the maneuver by inducing or informing the student of the simulated emergency condition or situation.

2. The student shall correctly identify the emergency condition or situation, report the degree of urgency in landing the aircraft, and determine the *nearest landing site where a safe landing can be made.*

3. The student shall recite the memory procedural steps to comply with the simulated emergency and ask the instructor to break out the pocket checklist at the completion of the memory items even if there are no non-memory items associated with the emergency.

4. The PAC will call for the Landing Checklist and direct the PNAC to make an appropriate emergency radio transmission.

5. When simulated emergencies are practiced away from the site, a waveoff shall be initiated by 400 feet. The waveoff must be completed by 300 feet and no slower than 50 KTS.

6. At the site, practice approaches should be terminated in an appropriate landing for the emergency. For example, simulated underspeeds may be completed to a sliding landing if insufficient power exists to execute a vertical landing.

Background. Simulated emergencies shall encompass all the single instrument indications (engine and flight performance instruments), caution and warning lights, and symptoms of

various emergencies that have been previously discussed on preceding events. Your instructor shall subject you to, and allow you to practice various simulated emergencies so that you may understand the differences involved in landing "AS SOON AS POSSIBLE" and "AS SOON AS PRACTICABLE."

Amplification and Technique

1. When airborne, it is imperative a proposed landing site is in mind in the event of an actual or simulated emergency. Should the unexpected happen, little or no time should be, wasted in beginning an approach to a landing site. Your instructor will discuss with you the decision making process involved in selecting potential landing sites during the preflight brief. PAY ATTENTION! This information will also be useful when you learn simulated engine failures at altitude.

2. The instructor will initiate the maneuver by inducing or informing the student of the simulated emergency. For example:

"You have a simulated. . .

a. Tail rotor chip detector caution light, or

b. Transmission oil temperature gauge at zero, or

c. Fluctuating N_g, TOT, and N_f, or

d. Loss of N_f and N_r with a constant N_g Show and tell me what you are going to do."

3. The student will correctly identify the emergency condition or situation, verbalize (and/or perform/simulate the NATOPS memory items when able or directed) and report the degree of urgency in landing the aircraft. For example:

a. "Sir, that is a land as soon as possible."

b. "Sir, that is a land as soon as practicable."

c. "Sir, that is a fuel control failure and a land as soon as possible."

d. "Sir, that is an underspeed N_f governor and a land as soon as possible."

4. The student will recite the proper procedural steps to comply with the simulated emergency. For example:

a. "No memory items, break out the PCL, and read the GEN FAIL procedures."

b. "Sir, adjust collective to maintain N_r, adjust twist grip to maintain N_f. Be prepared for a complete power loss, and land as soon as possible."

7-4 EMERGENCY PROCEDURES

5. For land as soon as practicable emergencies, the student is cautioned that extended flight is not recommended. The landing site and duration of the flight is at the discretion of the Aircraft Commander. For example, as in case (b), if the aircraft was at Pond Creek Bridge, inbound to Spencer, “land as soon as practicable” may be interpreted as landing at the nearest aerodrome (Spencer). Flying by one aerodrome to continue to another would therefore constitute "extended flight." If on a cross-country and an aerodrome is not within a reasonable distance (further than 15-20 minutes flight time), consideration should be given to landing at a site (farmer's field) at which the pilot *is positively* sure the landing will result in zero damage to the aircraft or private property.

6. The student will remind the copilot of his/her responsibility to transmit a simulated PAN or MAYDAY call (on ICS) and to complete the landing checklist by saying:

a. “Sir, PAN/CHECKLIST.”

b. Not required.

c. “Sir, PAN or MAYDAY/ CHECKLIST.”

d. “Sir, PAN or MAYDAY/ CHECKLIST.”

To help you decide which call is appropriate the definitions are listed below:

MAYDAY: Indicates imminent and grave danger and assistance is requested.

PAN: Indicates uncertainty or alert, followed by the nature of the urgency.

7. When “land as soon as possible” simulated emergencies are practiced away from the site, the waveoff shall be initiated by 400 feet. The waveoff must be completed by 300 feet and no slower than 50 KTS.

8. At the site, practice approaches are terminated in an appropriate landing for the emergency.

Discussion

1. In your training, you will learn and be required to master autorotations. From a syllabus standpoint these maneuvers serve a two-fold purpose.

a. Requires the student to understand and apply all aspects of headwork/basic airwork and CRM in order to successfully perform the maneuver.

b. Teaches the student that safe landings may be made in the event of a loss of power in flight.

2. The student should be cautioned that since the autorotation is emphasized in the syllabus, it is not the instant response to all emergency situations. On the contrary, the autorotation is used only in the following circumstances:

a. Engine failures

b. Fuel control failures (possibly)

c. Overspeeding N_f governor (possibly)

d. Underspeeding N_f governor (possibly)

e. Compressor stall (under certain circumstances)

f. Complete loss of tail rotor thrust

g. Confirmed fire (option)

3. Very few emergency situations require immediate pilot response. DO NOT ENTER AN AUTOROTATION AS AN AUTOMATIC RESPONSE TO AN UNEXPECTED CAUTION LIGHT STIMULUS. Combat anxiety and indecision by not only memorizing emergency procedures, but understanding and applying those procedures. Your instructor will not send you on to a checkride/solo until he/she is assured you understand the thrust of this discussion.

Common Errors and Safety Notes

1. Entering an autorotation when a powered approach was appropriate.

2. Failure to select a potential landing site prior to the simulated emergency.

3. Failure to remember emergency procedures in the air.

4. Overshooting/undershooting landing zone due to poor headwork/basic airwork.

5. Failure to initiate voice reports.

6. Failure to plan practice approach into the wind.

7. Failure to use copilot (Crew Resource Management).

Crew Resource Management

1. **Ground Emergencies**

a. Any crewmember recognizes and identifies emergency situation. (Situational Awareness)

b. Any crewmember announces emergency to all crewmembers. (Communication)

c. PAC initiates emergency response by verbalizing memory items/procedures per NATOPS Checklist to the entire crew, while simultaneously completing appropriate procedures. (Leadership)

d. PNAC backs up PAC on emergency procedures/checklists and completes assigned procedures. (Adaptability/Flexibility)

e. PAC/PNAC notifies Ground/Tower when problems exist that could require emergency response/assistance. (Communication)

2. **Airborne Emergencies**

a. Any crewmember recognizes and identifies emergency situation. (Situational Awareness)

b. Any crewmember announces emergency to all crewmembers. (Communication)

c. PAC flies aircraft - aviates. (Situational Awareness)

d. PAC initiates emergency response by verbalizing memory items/procedures per NATOPS Checklist to the entire crew while simultaneously completing appropriate procedures. (Leadership)

e. PNAC backs up PAC on emergency procedures and checklists and completes assigned procedures. (Adaptability/Flexibility)

f. PNAC breaks out NATOPS Pocket Checklist, verbalizing emergency procedures. (Communication)

g. PNAC obtains dual concurrence from PAC on system switches. (Communication)

h. PAC navigates aircraft to safe landing site. (Adaptability/Flexibility)

i. PNAC transmits PAN/MAYDAY on guard (over ICS if simulated). (Communication)

j. PNAC squawks emergency (if applicable). (Communication)

THIS PAGE INTENTIONALLY LEFT BLANK

CHAPTER EIGHT
NIGHT OPERATIONS

800. INTRODUCTION

Night flying is a very important phase of your pilot training. It is another important step in making you an all-around naval aviator. To accomplish this objective, night flying is conducted to familiarize the pilot with the techniques and procedures of helicopter night operations. You will be introduced to VFR navigation, low work, and normal approaches in the night.

The maneuvers at night will follow the same procedural profile as in the daytime. Refer to the procedures in section four of this publication for your maneuver description and parameters. This section discusses additional requirements of operating at night.

The techniques learned in daylight can be applied to night flight. However, due to reduced vision and depth perception, different cues must be used for determining relative position and speed of the helicopter in relation to the ground. Also, when airborne, more reliance is placed on flight instruments to maintain a safe flight attitude.

801. LIMITATIONS

General: To effectively operate at night, you must be aware of the additional limitations imposed by darkness. Factors to consider when operating at night are:

1. As the ambient light decreases, outside visual reference will become indistinguishable from the background. This *lack of depth perception* will make it difficult to maintain altitude and position in a hover. The out portion of the scan will move in close to the aircraft where the exterior lights provide sufficient illumination to identify terrain features. Altitude control, though difficult, is possible by utilizing the shadows produced by the exterior lights. Your instructor will demonstrate this technique. When visibility is good, lights can be identified at great distances, giving a false impression of how far away the object is. Ground track is also difficult to determine due to the lack of visual cues.

2. During daylight hours, equipment such as instruments, control switches, etc., within the cockpit can be easily recognized. At night these same items are difficult to locate. You must be capable of identifying every item within the cockpit in complete darkness. This degree of proficiency is essential to ensure the proper control switch is activated when applying emergency procedures. Also, navigational publications and flight equipment are hard to find in the cockpit at night. Procedures should be developed which standardize the location of these items to ensure positive identification when they are needed.

3. Visual references easily identified during the day are difficult to see at night. The best visual aids for night navigation at altitude are ground objects that emit illumination (e.g., towers with obstacle lights, airport beacons).

4. Because visual references are limited at night, the common tendency is to over bank the helicopter and raise or lower the nose in a turn when the maneuver is being performed by visual reference or pilot senses. These control inputs may result in an unusual attitude or induced vertigo. Reference to primary flight instruments (e.g., airspeed and altitude) should be included in your crosscheck when performing a night maneuver above terrain flight altitudes. Visual flight becomes more demanding when conducted over sparsely inhabited areas where a reduced number of ground lights are found. Also, as the altitude above the ground increases, visual references become less effective and more reliance must be placed on instrument use.

5. Reduction in visual references may cause you to focus your attention on a single light or a group of lights in a concentrated area. This condition induces illusions and may cause vertigo. To eliminate this unsafe phenomenon, avoid staring at a single light. Landing areas should always be lighted with two or more widely separated lights.

6. At night, adverse meteorological conditions may be encountered unexpectedly. Ground visibility restrictions and clouds may form below the flight altitude. When ground references become obscured, you should anticipate a layer of clouds or fog is below your flight altitude. Clouds at the same flight level are difficult to identify and are not usually detected until entering instrument meteorological conditions (IMC). Procedures to follow upon entry into IMC must be established prior to conducting night flight.

7. When fully night-adapted, the eyes become extremely sensitive to light. Exposure to a light source will cause partial or complete loss of night vision. Caution must be taken to avoid exposure to light sources, both outside and inside the aircraft.

802. PREFLIGHT INSPECTION

General: Preflight inspection should be conducted during daylight hours when possible. If the preflight inspection is conducted at night, a flashlight with a white lens should be used to supplement the available lighting. If a red lens is used, oil and hydraulic leaks are not detectable. Adequate time should be allowed to dark-adapt after the preflight. The Night Preflight Checklist is identical to daylight inspection; however, due to the limitations imposed on us by darkness, more time is required to complete the preflight.

1. In addition to a normal preflight inspection, the pilot must ensure external and internal lighting systems are working. At a minimum, check the following systems:

   a. Ensure all position/tail and anti-collision lights are working. Check position lights operate in STEADY and FLASHING positions.

   b. Check the landing and searchlight. Ensure the searchlight can be positioned.

   c. Check all gauge and overhead panel lights are working and show correct response to rheostat positions. Check correct response to the BRIGHT/DIM switch.

   d. Check cockpit lights for operation.

e. Check radar altimeter TEST feature for correct response.

f. Check the standby battery voltage and right seat attitude indicator in the event of primary systems failure.

g. Place special emphasis on the cleanliness of all windows, especially the windscreen.

h. Check NAS South Whiting NOTAMS and destination NOTAMS for facility limitations for night operations.

i. Perform the Instrument Checklist while taxiing for takeoff.

2. Personal preparation will contribute significantly to the success of night operations. You must be physically and mentally prepared to participate in night flight. Pilot mental and physical fatigue occurs sooner while conducting night operations. These conditions result in poor coordination, slower reaction time, and a reduction in night vision interpretation. To ensure personal readiness, the following guidelines should be followed:

a. Keep physically fit.

b. Eat a nutritionally balanced diet.

c. Obtain adequate rest.

d. Avoid self-medication.

e. Avoid the use of tobacco and alcohol.

f. Learn and use the principles of night vision.

g. Avoid bright sunlight during the day.

h. Participate in frequent night flight training.

i. Be familiar with personal survival gear and location as well as operation.

j. ALWAYS carry a flashlight at night.

k. Know the cockpit and egress procedures. Knowledge of systems switch location and systems circuit breaker location is a must. Numerous aircraft and flight crews have been lost due to simply flipping the wrong switch or pulling the wrong circuit breaker during emergency procedures applications.

l. Flight Briefings. Thorough preflight planning is essential for successful night operations. The following are the minimum subjects that should be discussed during a night preflight briefing.

i. In-depth weather briefing for the entire flight period, to include winds, sunset, moonrise, percent moon available, and the ambient light level during time of flight.

ii. Visibility restrictions (e.g., smoke, haze, fog) during the flight period.

iii. Discuss the traffic pattern to be flown, maneuvers to be performed, airfield lighting, and aircraft lighting.

iv. Discuss the mission/training maneuvers to be performed.

v. Aircrews should be briefed to make a go-around anytime the approach feels uncomfortable. The reason for the uncomfortable approach should be discussed. If the crewmembers notice the effects of fatigue, the flight period should be terminated.

vi. At the conclusion of the mission, a thorough debriefing should be conducted. Included in the debriefing should be lessons learned, problems which arose during flight, recommended solutions to these problems, and the individual's exact feelings about the mission or maneuvers being performed at night.

m. Crew Duties. Specific crew duties are designated to ensure the teamwork necessary to conduct night flight. In a training environment, this sharing of duties should not relieve the instructor of his/her overall responsibilities. The following examples do not limit the duties which can be assigned to crewmembers, but ensure crew duties are designated during the preflight briefing and understood by each member. (Figure 8-1)

DUTY	PAC	PNAC
Takeoff Checks	----	X
Landing Checks	----	X
Aircraft Control	X	----
Outside Orientation	X	X
Radio Calls	X	X
Performance Checks (rate and engine instruments)	X	X
Approach Angle, Closure, etc.	X	X
Tuning Radios	----	X

Figure 8-1 PAC/PNAC Duties

803. USE OF LIGHTS

General

1. **Position Lights**

   a. During runup to flight idle, operate the position lights in the FLASH BRIGHT mode.

   b. Turn position lights to STEADY BRIGHT immediately upon reaching flight idle.

   c. During shutdown from flight idle, operate the position lights in the FLASH BRIGHT Mode. Lights should remain on until the rotor blade is stopped and tied down.

2. **Cockpit Lights**

   a. During prestart checks, cockpit lights should be adjusted to the lowest intensity level allowing you to read the instruments.

   b. For non-tactical flights above 500 feet, the instrument and panel lights may be illuminated. As the ambient light level decreases from a twilight condition to darkness, reduce the intensity of the cockpit lights. The intensity should be adjusted to the lowest readable level. Reducing the level of intensity of the cockpit lights minimizes reflection of interior lights off the windscreen.

   c. When conducting night flight by reference to instruments, the cockpit lights will be adjusted to a higher intensity. A loss of night vision will occur under these conditions. Prior to landings, cockpit lights should be dimmed to enhance your night vision capabilities for outside references during the landing.

   d. The map light may be used to supplement the available light in the cockpit. Normally, it is used by the navigator/copilot to view maps. During the preflight, these lights should be checked to ensure that they are operable. Also, the variable rheostat should be checked to ensure that it is turned to the OFF position.

   e. In addition to the aircraft interior lights, a flashlight may be used to provide illumination within the cockpit.

3. **Anti-collision Lights**

   a. The anti-collision light shall remain off in the line environment during turnup and shutdown. The anti-collision light will be turned on upon crossing the hold short line for takeoff and turned off upon clearing the duty runway on landing.

   b. Upon entry into instrument meteorological conditions, the anti-collision light should be turned off. Operation of the anti-collision light during these conditions tends to induce distraction and disorientation.

4. **Landing Light/Searchlight**

a. The searchlight is normally turned on during all takeoffs and landings from established airfields when conducting non-tactical training. The landing light or searchlight may be used when hovering to and from the parking spot. Caution must be taken to minimize the loss of night vision when flight is to be continued at low altitude after the lights are turned off.

b. When conducting practice night autorotations, the searchlight is turned on by 200 feet AGL and left on until termination of the maneuver or execution of a waveoff.

CAUTION

The searchlight may reduce visibility under certain atmospheric conditions. When these conditions exist, the searchlight should not be turned on until on final at approximately 200 feet.

c. The searchlight may be used to identify the helicopter position when entering the traffic pattern. Also, it may be used as a signal to alert the tower controller of radio failure.

5. **Radar Altimeter**. The radar altimeter shall be set to 300 feet at night on all enroute phases of flight; it may be set to zero in the landing pattern.

804. NIGHT TAKEOFF

Maneuver Description and Technique

1. All night vertical takeoffs and landings shall be accomplished with the search or landing light on. A vertical takeoff is accomplished using the same flight control inputs employed during day operations. Because of reduced outside visual cues, pick reference points in front and to the side of the helicopter prior to lifting. Do not fixate on one point as vertigo or drift may develop. Keep your outside scan moving from front to side.

2. The vertical landing is executed with the same control inputs as employed during daylight operations. Pick out reference points in front and to the side of the helicopter prior to commencing landing. Do not fixate on any one reference point as vertigo or drift may develop. Keep your outside scan moving from front to side and correct for any drifting motions prior to touchdown. An aft drift may result in a tail rotor strike. A sideward drift may result in dynamic rollover or mast bumping on touchdown.

805. NIGHT LANDINGS

Maneuver Description and Technique

1. Night landings shall be executed to either an approved lighted landing site such as homefield or an approved tactical landing site such as Santa Rosa OLF.

2. Prior to reaching an abeam position, or if on a straight-in approach, select an intended point of landing (if landing to a lighted runway or taxiway) by identifying a specific grouping of lights. The abeam for a lighted zone is self-explanatory.

3. From the abeam position commence a descending decelerating turn to arrive at the 90º position with 300 feet AGL and 60 KIAS. From the 90º position continue a descending decelerating turn to arrive on the course line with 600 to 800 feet of straightaway, 50 KIAS with 150 to 200 feet AGL of altitude. The search or landing light shall be turned on at a minimum of 200 feet AGL and remain on throughout the landing evolution.

4. If a hover landing is selected review the applicable paragraphs of this section. If possible, all night tactical landings should be made to a hover and ensure landing zone suitability prior to touchdown. If a no-hover landing is necessary, ensure rate of descent and airspeed are under control. Crosscheck performance instruments while flying down the approach glideslope. If visual reference points cannot be identified on low final, attempt to terminate in a hover. Do not hesitate to waveoff if ground references are not acquired.

5. Pattern altitude and airspeed are 500 feet AGL and 70 KIAS when operating at Santa Rosa.

806. NIGHT HOVERING TECHNIQUES

Maneuver Description and Technique

1. Difficulty is experienced in maintaining directional control and hovering altitude at night. When hovering with the searchlight, ground references are available to the front and to a limited degree to each side of the helicopter. Hover technique during daylight conditions applies when hovering with the landing light on.

2. When hovering without the aid of the searchlight/landing light, the anti-collision lights provide the only means of illumination. Although the lighting is not bright, it is sufficient if the hover is kept at five feet. Under these conditions, a common error is to stare at a point which tends to induce vertigo. Reference points should be selected both to the front and to the sides of the helicopter. These references should be selected at varying distances from the helicopter. To avoid fixation, the eyes should be constantly shifted to scan and identify reference points in all directions.

3. On some helicopters, the shadow formed by the skid from the illumination of the anti-collision lights provides a good indicator for identifying the altitude of the hover. As the helicopter ascends, the size of the shadow will become larger and as it descends the shadow will

become smaller. Upon establishing a five-foot hover, reference should be made to the size of the shadow.

4. When operating with minimum lights at night, a normal tendency is to taxi too fast. This situation is difficult to overcome when taxiing over sod. Continuous reference must be made to the side of the helicopter to observe terrain features giving an indication of forward speed. If taxiing on a runway, the white centerline and runway lights provide a good reference for determining forward speed.

CAUTION

Avoid fixation on runway centerline or taxi line during takeoff.
This may cause spatial disorientation.

807. NIGHT HOVER TAXI

Maneuver Description and Technique

1. Hover altitude is five feet; however, your ability to remain stable over the spot will be degraded due to a lack of visual outside cues. Review the night vision techniques discussed in this section on hovering. All low work shall be conducted with the searchlight or landing light on.

2. Air taxi at night is also difficult due to a lack of visual cues. The normal tendency is to taxi faster at night as compared to day operations because normal ground references are not available. Reference must be made to the side of the helicopter to pick up rate of taxi speed, but do not fixate to the side. Keep your scan moving.

808. NIGHT EMERGENCY PROCEDURES

Maneuver Description and Technique

1. Emergency procedures for day and night flight are the same; however, the time required to respond to an emergency condition will normally be longer at night. This is due to the increase in psychological stresses and reduced vision within the cockpit at night. To minimize time delays in executing the required emergency procedures at night, you must know the location of all the controls and switches within the cockpit and the emergency procedures.

2. Particular attention to detailed cockpit duties should be covered in the preflight briefing. If there is any question in your mind as to who is going to do what after the brief - ASK QUESTIONS. Lack of responsiveness in a critical situation may very well compound an emergency.

809. FORCED LANDINGS

Every attempt should be made to become familiar with the terrain over which night flights are made. If an emergency autorotative landing is necessary, normal daylight procedure is followed, using the landing light to observe obstructions and select a landing area. To afford a choice of landing points during night autorotation, prescribed airspeed is maintained until terrain detail becomes discernible. If power is available, descend with power using the landing light to identify a safe landing area.

810. NIGHT PRACTICE AUTOROTATIONS

Maneuver Description and Technique

1. Night practice autos shall only be practiced from the 90º or straight-in positions and are performed in the same manner as procedures employed during day operations; however, greater concentration is required due to lack of normal visual cues. The searchlight shall be turned on by 200 feet AGL and autorotations shall only be practiced on a lighted runway with a crash crew on duty. Practice night autorotations shall be terminated in a power recovery no lower than 10 feet AGL.

2. Review South Whiting night course rules prior to the brief for specific restrictions to the night landing pattern.

811. NIGHT PILOTAGE

General

During hours of darkness, an unlighted landmark may be difficult or even impossible to see, and lights can be very confusing because they appear to be closer than they really are. Stars near the horizon may be confused with lighted landmarks. Objects can be seen more easily at night by looking at them from the side of the eye. Staring directly at a light during night flight may impair night vision and cause vertigo and disorientation.

Unlighted Landmarks

In moonlight and occasionally on moonless nights, some of the more prominent unlighted landmarks such as coastlines, lakes, and rivers are visible from the air. Reflected moonlight causes a stream or lake to stand out brightly for a moment; however, this view may be too brief to permit recognition.

Lighted Landmarks

Cities and large towns are usually well lighted and are more visible at night than in the daytime. They can often be identified by their distinctive shapes and frequently can be seen at great distances, often appearing closer than they actually are. Smaller towns darkened early in the evening are hard to see and difficult to recognize. Busy highways are discernible because of automobile headlights, especially in the early hours of darkness.

812. NIGHT LOW ALTITUDE NAVIGATION

Maneuver Description and Technique

1. Night low altitude navigation training shall normally take place within the local training area. The SMA shall contact the instructor prior to the brief for the route of flight.

2. The SMA shall plan headings, time, and distance between each designated checkpoint. The route shall be flown at 500 to 1000 feet AGL and between 80 to 100 KIAS. The route shall terminate at either Santa Rosa OLF or one of the VFR entry points for South Whiting Field. Alternate airfields may be used as termination points as needed.

Night Terrain Interpretation

1. Factors which can affect terrain recognition at night are:

   a. *Ambient light*. Visual acuity improves as ambient light level increases. Light sources may be natural (moon, stars) or artificial (flares, searchlights, cities). The use of artificial light can be on-call, or planned for a designated hour and minute. Natural light is a function of the moon phasing angle.

   b. *Object size*. Because visual acuity decreases at night, the ability of the eye to perceive small objects becomes difficult if not impossible. Large structures and terrain features, such as churches, water towers, and rivers, are more easily recognized during hours of darkness. A small object, such as a tank, is difficult to identify because it becomes lost in its environment. To overcome these limitations, a longer viewing time and a shorter viewing distance are required.

   c. *Object shape*. A natural or manmade object can be identified at night by its shape or silhouette. Familiarization with the architectural design of buildings assists in the recognition of structures at night and shape assists in identifying objects difficult to recognize because they are small in size. For example, a tank, which could not be recognized because of its relatively small size in relation to its environment, may be easily recognized when viewed from the side because of its distinctive silhouette. Shape of terrain features also provides a means of identification at night. Open fields, shown on the map as triangular in shape, may provide positive identification when viewed from the helicopter. Landmarks such as a bend in the river or a prominent hilltop provide a distinct shape which aids in terrain interpretation at night.

   d. *Viewing distances*. Because the viewing angle decreases as the distance from the object increases, objects which are large in size and distinctive in shape may become unrecognizable when viewed from a great distance at night. This, combined with poor depth perception at night, can lead to faulty judgment of size. Objects also lose form as the viewing distance increases. A church building viewed at a close distance at night will appear as a large structure with a distinctively high roof; however, when viewed at a great distance, it may resemble a family dwelling. This phenomenon also

occurs when viewing military targets or terrain features at a great distance. The distance at which interpretation of an object becomes unreliable also depends on ambient light level. An object identified by its shape and size at a distance of up to 1500 meters during a high light condition may be unrecognizable at 500 meters during a low light condition.

e. *Contrast.* Identification of terrain features by contrast depends on available ambient light, the color and texture of the object viewed, and its background. The color and texture of an object or terrain feature affects its reflective quality. This characteristic aids or detracts in identification by contrast. An open field with no vegetation which is light in color is an example of an optimum reflective surface, while an area which is covered with dense vegetation is an example of the worst condition of reflectivity. Seldom is terrain encountered in which both extremes are found. Knowledge of the reflective quality of objects and terrain features will aid in identification by contrast. Objects and terrain features which are most affected by contrast are:

i. Roads. Dirt roads provide excellent contrast between the surrounding terrain and its surface, especially where the road is cut through heavily forested areas. A dirt road normally varies in soil texture and color from that of adjacent soil, a condition that further improves the contrast of the dirt road and surrounding terrain. Asphalt roads are difficult to identify because the dark surface reflects very little light, a condition reducing the contrast between the road and surrounding terrain. Concrete highways provide an excellent reflective surface and are easily identified at night.

ii. Water. There is very little contrast between a body of water and a land mass during low light conditions. When viewed from the air, lakes or rivers appear as dark gray in color. As the light level increases, the water begins to change in color, contrast increases, and reflected moonlight can be easily detected. When a surface wind exists, the reflection off the water is intensified and more easily recognized when viewed from an angle than when viewed from directly overhead.

iii. Open fields. Contrast is very poor in cultivated fields, since most crops are dark in color and tend to absorb light. During the harvest or dormant time of the year, the color of vegetation changes to a lighter color and contrast improves. A recently plowed field may be void of vegetation; however, because of the course texture of the soil after plowing, light is absorbed and very little is reflected.

iv. Forested areas. Heavily forested areas do not reflect light and appear as dark areas at night. Excellent contrast exists between an open field and a forested area that normally surrounds it. If flight is conducted over terrain where heavy vegetation dominates, the difficulty will be in identifying objects and terrain features because of the lack of contrast.

v. Desert. The light color of the soil and the sparse vegetation that are characteristics of desert terrain provide the best conditions for detecting objects and prominent terrain features by contrast. Military target are easily recognized on the desert because of the contrast between dark and light objects. Camouflage is often used to avoid detection. Mountain ranges, abruptly rising from the desert floor, can be easily identified because the dark color of the barren mountains contrast with the light color of the flat terrain.

f. *Altitude*. At night, discrimination of objects on the ground progressively decreases as altitude increases above 100 feet for all levels of ambient light. Contrast between objects becomes less distinguishable because objects blend as altitude increases. Since terrain is less well defined at higher altitudes, the difficulty of detecting changes in altitude increases. Distortion of the form of objects occurs because of the change in viewing angle and the distance from which the object is viewed. All of these conditions increase the difficulty of navigation.

Night Vision

At altitude, more reliance must be placed on flight instruments to maintain airspeed, altitude, and heading. Because visual references are limited at night, the common tendency is to overbank in a turn and raise or lower the nose in a turn when the maneuver is being performed by outside visual reference or pilot senses. Crosscheck the flight instruments when performing night maneuvers at flight altitudes.

At night, adverse meteorological conditions may be encountered unexpectedly. Ground visibility restrictions and clouds may form below the flight altitude. When ground references become obscured, you should anticipate a layer of clouds or fog is below your flight altitude. Clouds at the same flight level are difficult to identify and are not usually detected until entering instrument meteorological conditions (IMC). Procedures to be followed upon entry into IMC must be established prior to conducting night flight (inadvertent entry IMC).

In a hover, difficulty is experienced because visual ground references are limited. Control inputs may be made displacing the helicopter both vertically and horizontally without the pilot realizing movement over the ground, especially when in a high hover. The position lights, if on steady bright will aid the pilot visually for outside cues if a five-foot hover is maintained. Keep your outside scan moving. Fixation on one object may induce vertigo. Reference points or visual cues should be selected to the front and side of the helicopter to aid the pilot in remaining over the spot. With the search or landing light on, visual reference to the ground is greatly enhanced. Do not blind yourself with the moveable searchlight or fixate on the beam of light; again, vertigo may develop.

Night Operations Common Errors and Safety Notes

1. Night operations require a high level of concentration and attention. It is imperative the crew is completely briefed, the flight is properly planned, and crew rest requirements be strictly observed.

2. Inadvertent entry into IFR conditions can occur without warning. Be alert to this possibility.

3. Poor scan techniques and fixating on the spot may result in disorientation and dangerous sink rates at night.

4. Use the lights with discrimination in haze or fog as reflections can impair vision.

5. The landing light or searchlight should be utilized for night taxi operations, but the pilot will ensure lights are utilized with courtesy and consideration. Do not limit another pilot's vision.

6. Ensure a thorough brief is conducted prior to the flight on low level emergency procedures, inadvertent entry into IMC and lost aircraft procedures.

7. Utilize as many checkpoints as possible in order to ensure your position on night navigation flights.

8. A thorough understanding of the pilot/copilot relationship is essential to the successful completion of the flight. The pilot who is not flying the aircraft must give the pilot who is flying a constant, accurate, and thorough updating as to present position, checkpoints, courses, etc.

9. NAVAIDS should be warmed up for possible emergency use.

10. Maintain VFR conditions at all times.

11. Do not “FLATHAT” on night navigation flights.

12. Exercise special care to avoid flying directly over populated areas, civilian airports, turkey and chicken farms, etc.

13. All towers near the route of flight should be identified and briefed for night navigation flights.

14. Avoid the common tendency to position the helicopter excessively close to the intended point of landing at the 180º position while practicing night landings or autorotations.

15. If you become disoriented:

    a. Maintain your current position. Do not continue movement across the ground. Orient yourself to the aircraft's current position.

    b. Proceed to your last known point.

    c. Locate a piece of terrain or man-made object that is unique or you recognize. Locate this point on your map and orient yourself in relation to this point.

d. Proceed to this feature and orient the aircraft.

e. Find a linear feature (river, railroad, power lines, or roads). Follow this linear feature until a recognizable feature is located.

f. Turn on a NAVAID and locate your current position.

APPENDIX A
GLOSSARY

A100. NOT APPLICABLE

THIS PAGE INTENTIONALLY LEFT BLANK

APPENDIX B
SOLO GUIDELINES

Attention to detail and awareness of procedures are essential to safe flight, especially during the execution of a solo flight.

SOLO OBSERVER RESPONSIBILITIES. After successfully completing C4390 you are eligible to be assigned as an observer for another student on his/her C4401. On C4390 during the preflight brief, you and your instructor will discuss solo observer responsibilities. Review these procedures prior to the preflight brief and be prepared to discuss these responsibilities with your instructor.

1. **Preflight Brief**

   a. Student crew should brief prior to seeing Operations Duty Officer (ODO)/Flight Duty Officer (FDO) per squadron SOP.

   b. Following FDO/ODO brief, conduct a crew brief with the student pilot.

2. **Aircraft Issue.** Assist the student pilot in reviewing the Aircraft Discrepancy Book (ADB) for your aircraft. Ensure you do not have any “down” pink sheets, chip history, or failed HIT checks in the ADB and that the aircraft has been released "safe for flight." If unclear or confused over any discrepancy or signoff to your satisfaction, ask another instructor or call the FDO/ODO for clarification or guidance. For dual solo flights, sign two acceptance cards, one for each solo and complete one EFLIR for the combined event.

3. **Preflight Inspection.** Assist the student pilot in the preflight inspection to the best of your ability. If unclear or confused over any discrepancy, ask another instructor or call the troubleshooter for clarification.

4. **Prestart Checklist**

   a. Challenge the student pilot to checklist items and ensure the student pilot not only responds correctly, but also performs the function correctly.

   b. Ensure the doors are secure.

5. **Start Checklist**

   a. Same as 4.a.

   b. Secure the fuel valve in the event of a hot start.

NOTE

Be aware of battery voltage on initial actuation of the starter. If it stabilizes below 18 volts, advise the student pilot to abort the start. An APU start will be required. Ensure BATTERY OFF before APU is plugged in.

6. **Pre-Takeoff Checklist**

   a. Same as 4.a.

   b. During the control check, caution the student pilot against rapid or large flight control movements.

   c. Caution the student pilot when he/she opens the twist grip not to exceed 40% torque.

7. **Takeoff Checklist**

   a. Same as 4.a.

   b. Tune radios as directed by student pilot.

   c. Clear left prior to liftoff.

   d. Ensure position lights are on STEADY BRIGHT.

8. **On Initial Liftoff/Flight Line Taxiing**

   a. Check caution panel CLEAR, gauges GREEN.

   b. Clear left as necessary.

   c. If an RPM beep adjustment is required, advise the student pilot of this discrepancy (the student pilot will adjust the RPM using the beep trim switch).

   d. Do not allow the student pilot to taxi upwind of any aircraft starting up or shutting down (low RPM, anti-collision lights ON) or taxi by any fuel truck closer than 50 ft.

   e. Remember, the “HOLD” signal given by any line personnel is a mandatory STOP!

   f. Be alert while taxiing, looking for pedestrians, other taxiing aircraft, ground support vehicles, fuel trucks, FOD, open doors on other parked aircraft, etc.

   g. Clear left at all intersecting/converging avenues of taxi.

   h. Tune radios/transponder as directed.

9. **After Takeoff**

   a. Provide clearing voice reports as necessary.

   b. Again, double check caution panel CLEAR, gauges GREEN. Check all overhead circuit breakers IN.

   c. Ensure your aircraft is clear of the maintenance pattern/traffic. Be alert for GCA traffic when crossing the approach end of runway 32.

NOTE

The maintenance pattern is oriented about the duty runway, flown in a racetrack pattern, within the confines of the upwind and downwind ends of the duty runway.

   d. Advise the student pilot if the five-minute torque/TOT limitations on takeoff are to be exceeded.

10. **Enroute**

   a. Keep alert for other aircraft entering the channel.

   b. Clear left as necessary.

   c. Tune radio as required.

   d. Remind student pilot to perform landing checklist.

11. **At the site**

   a. Do not let the student pilot put you in extremis. If the student pilot performs any maneuver you deem unsafe or imminently dangerous, express your concern before it is too late. Communicate! AT NO TIME WILL YOU ASSUME CONTROL OF THE HELICOPTER.

   b. If the student pilot chooses the left pattern, you are primarily responsible for clearing the aircraft prior to turning crosswind. Choosing the right pattern does not relieve you of primary responsibility for clearing the aircraft. After clearing yourself left, double check the student pilot and ensure you are cleared right.

NOTE

Check above your position, at your altitude, and most importantly, below and behind near your six o'clock position. Traffic in the 180º lane is difficult to see and converges on your crosswind turn position at a rapid rate. Be alert!

12. **Practicing Low Work**

    a. When OAT is above 21º C, periodically check the transmission oil temperature to ensure it is not approaching 110º C. If it reaches 105º C, taxi to the downwind half of the field and take off. Perform one or two high work maneuvers until the transmission oil temperature decreases. Abbreviated low work may then be practiced again.

    b. If winds are above 10 KTS, remind the student pilot of the effects of the wind while practicing square patterns and turns on the spot.

13. **Emergencies**

    a. Pull the checklist and read the correct procedural steps to the student pilot. Ensure the student pilot performs the proper steps in sequence.

    b. Do not allow the student pilot to rotate the twist grip to flight idle or the secure position unless both agree that an autorotation is the proper course of action!

WARNING

Do not enter an autorotation because a Land as Soon as Possible caution light illuminates. As long as the engine is developing power, maintain 100% N_r/N_f and make a power on approach to the nearest safe landing site.

    c. Perform Landing Checklist, squawk 7700, and broadcast a MAYDAY/PAN report.

    d. When on the deck, report over UHF "SAFE ON DECK" and proceed with the EMERGENCY SHUTDOWN CHECKLIST.

    e. At the site, advise the weather pilot/solo watch of your position/difficulty as soon as possible.

14. **Hot Seat**

    a. Ensure the student pilot has retarded the twist grip to flight idle before allowing any personnel to enter or leave the rotor arc.

b. Hold the controls while the student pilot and maintenance/instructor pilot execute the seat change.

15. **Returning from Spencer/Pace**

a. Leave Spencer with no less than 20 gallons.

b. Leave Pace with no less than 20 gallons.

c. Keep alert for other aircraft entering the channel.

d. Clear left as necessary.

e. Tune radios as required.

f. Remind student pilot to perform Landing Checklist.

g. Be alert for maintenance and GCA traffic when approaching home field.

h. If unsure of any tower transmission, do not hesitate to ask for clarification.

16. **Closing Out NAVFLIRS.** A NAVFLIRS accurately reflecting the solo flight time must be completed. If two solo students share the same aircraft there will be one NAVFLIRS generated with each student logging the appropriate amount of First Pilot Time.

THIS PAGE INTENTIONALLY LEFT BLANK