NAVAL AIR TRAINING COMMAND

NAS CORPUS CHRISTI, TEXAS **CNATRA P-813 (New 01-09)**

FLIGHT TRAINING INSTRUCTION

LOW-LEVEL NAVIGATION INTERMEDIATE JET T-39N

2009

DEPARTMENT OF THE NAVY
CHIEF OF NAVAL AIR TRAINING
CNATRA
250 LEXINGTON BLVD SUITE 102
CORPUS CHRISTI TX 78419-5041

CNATRA P-813
N712

28 JAN 2002

CNATRA P-813 (NEW 01-09)

Subj: FLIGHT TRAINING INSTRUCTION, LOW-LEVEL NAVIGATION, T-39N

1. CNATRA P-813 (New 01-09) PAT, "Flight Training Instruction, Low-Level Navigation Intermediate Jet T-39N" is issued for information, standardization of instruction, and guidance to all flight instructors and student aviators within the Naval Air Training Command.

2. This publication shall be used as an explanatory aid to the T-39N Low-Level Navigation Flight Curriculum. It will be the authority for the execution of all flight procedures and maneuvers herein contained.

3. Recommendations for changes shall be submitted via CNATRA TCR form CNATRA 1550/19 in accordance with CNATRAINST 1550.6E.

4. CNATRA P-813 (New 01-09) PAT is a new publication.

JAMES A. CRABBE
Chief of Staff

Distribution:
CNATRA (N71) (10) Plus Original
CNATRAINST 5215.1S
List I (E, M, S, Z, DD, KK)

FLIGHT TRAINING INSTRUCTION

FOR

LOW-LEVEL NAVIGATION
INTERMEDIATE JET

T-39N

P-813

THIS PAGE INTENTIONALLY LEFT BLANK

LIST OF EFFECTIVE PAGES

Dates of issue for original and changed pages are:
Original...0...28 Jan 09 (this will be the date issued)
Change Transmittal…1…20 Jul 09

TOTAL NUMBER OF PAGES IN THIS PUBLICATION IS 84 CONSISTING OF THE FOLLOWING:

Page No.	Change No.	Page No.	Change No.
COVER	0	1-21 – 1-27	0
LETTER	0	1-28 (blank)	0
iii	0	2-1 – 2-21	0
iv (blank)	0	2-22	1
v – xi	0	2-23 – 2-28	0
xii (blank)	0	2-29	1
1-1 – 1-2	1	2-30	0
1-3	0	2-31	1
1-4	1	2-32 (blank)	0
1-5 – 1-7	0	A-1	0
1-8 – 1-10	1	A-2 (blank)	0
1-11 – 1-12	0	B-1 – B-8	0
1-13	1	C-1 – C-2	0
1-14 – 1-18	0		
1-19 – 1-20	1		

INTERIM CHANGE SUMMARY

The following changes have been previously incorporated in this manual:

CHANGE NUMBER	REMARKS/PURPOSE
1	Changes made per transmittal letter (07-20-09)

The following interim Changes have been incorporated in this Change/Revision:

INTERIM CHANGE NUMBER	REMARKS/PURPOSE	ENTERED BY	DATE

SAFETY/HAZARD AWARENESS NOTICE

This course does not require any special safety precautions other than those normally found on the flight lines

INTRODUCTION

Regardless of the type aircraft you fly, at some point in your aviation career you will likely fly a high speed, low altitude mission. This is one of the most demanding environments in which tactical aircraft operate. It is also one of the best mediums to train a student with the primary focus being on situational awareness. This situational awareness both in and out of the cockpit is based upon fundamental skills of mission planning, crew coordination, scanning, and dead reckoning (DR) navigation.

The skills introduced in this course are essentially the same as those used in high performance aircraft flying at 500 KTS and 200 feet. Your ability to properly prepare a navigation chart, study and interpret the information on the chart, and identify points on the ground while airborne determines the success of your mission. This training highlights the importance of fundamental skills, which are the building blocks for your future low-level procedures.

SCOPE

This FTI provides text material, figures, and assignment sheets to augment the instructor presentations. Each classroom lecture corresponds to a chapter in this FTI. Read the chapter and complete the assignment sheet prior to class.

CHANGE RECOMMENDATIONS

Submit all recommendations to the CNATRA Intermediate Jet Low-level Stage Manager. The Stage Manager will forward changes to the Course Curriculum Coordinator.

TABLE OF CONTENTS

LIST OF EFFECTIVE PAGES ..... **v**
INTERIM CHANGE SUMMARY ..... **vi**
SAFETY/HAZARD AWARENESS NOTICE ..... **vii**
TABLE OF CONTENTS ..... **ix**
TABLE OF FIGURES ..... **xi**

CHAPTER ONE - LOW-LEVEL MISSION PLANNING **1-1**
100. INTRODUCTION 1-1
101. LOW-LEVEL CHART PREPARATION 1-1
102. ROUTE CORRIDORS 1-4
103. PLOTTING COURSE LINES AND TURNPOINTS 1-8
104. CHART ANNOTATIONS 1-15
105. LOW-LEVEL FUEL PLANNING 1-18
106. JET LOG CONSTRUCTION 1-21
107. DD 175 CONSTRUCTION 1-25
108. SUMMARY 1-26
109. ASSIGNMENT SHEET 1-27

CHAPTER TWO - T-39N LOW-LEVEL IN-FLIGHT PROCEDURES **2-1**
200. INTRODUCTION 2-1
201. FUNDAMENTALS 2-1
202. PREFLIGHT PLANNING AND BRIEFING 2-2
203. T-39N ROUTE ENTRY CHECKLIST 2-3
204. ROUTE ENTRY 2-4
205. SCANNING 2-6
206. CREW COORDINATION 2-9
207. TURNPOINT PROCEDURES 2-9
208. TWO MINUTE PRIOR CALL 2-10
209. MARK-ON-TOP CALL 2-11
210. WINGS LEVEL CALL 2-12
211. SPEED CORRECTIONS 2-23
212. HOW TO DO A SPEED CORRECTION 2-24
213. THE COMPLEX SPEED CORRECTION 2-25
214. COURSE CORRECTIONS 2-26
215. INTERMEDIATE CHECKPOINTS AND FACCU 2-28
216. ROUTE EXIT PROCEDURES 2-28
217. SUMMARY 2-29

APPENDIX A - GLOSSARY **A-1**
A100. N/A A-1

APPENDIX B - ASSIGNMENT SHEETS **B-1**
B200. ASSIGNMENT SHEET “A” B-1
B201. ASSIGNMENT SHEET “B” B-2

B202. ASSIGNMENT SHEET “C” B-3
B203. ASSIGNMENT SHEET “D” B-4
B204. ASSIGNMENT SHEET “E” B-5
B205. ASSIGNMENT SHEET “F” B-6
B206. ASSIGNMENT ANSWER SHEET B-8

APPENDIX C - CHART CHECKLIST C-1

TABLE OF FIGURES

Figure 1-1 Intermediate Low-level Routes 1-2
Figure 1-2 AP-1B 1-3
Figure 1-3 Drawing Corridors Step 1 1-5
Figure 1-4 Drawing Corridors Step 2 1-5
Figure 1-5 Drawing Corridors Step 3 1-6
Figure 1-6 Drawing Corridors Step 4 1-6
Figure 1-7 Drawing Corridors Step 5 1-7
Figure 1-8 Drawing Corridors Step 6 1-7
Figure 1-9 Route Corridor VR1020 1-8
Figure 1-10 No Turn Radius 1-9
Figure 1-11 Turn Radius 1-9
Figure 1-12 Compass Technique 1-10
Figure 1-13 Course Lines 1-11
Figure 1-14 IP and Target Leg 1-11
Figure 1-15 Erase 1-12
Figure 1-16 Usable Chart 1-13
Figure 1-17 Maximum Elevation Figures 1-14
Figure 1-18 Airspace Annotations 1-16
Figure 1-19 Stereo Route Profile 1-18
Figure 1-20 Jet Card Front 1-23
Figure 1-21 Jet Card Back 1-24
Figure 1-22 Alternate 1-24
Figure 1-23 DD 175 1-26

Figure 2-1 Visual Reference 2-6
Figure 2-2 Visual Scan 2-7
Figure 2-3 Turnpoint Procedures 2-10
Figure 2-4 Turnpoint Geometry 2-14
Figure 2-5 Turnpoint Geometry 2-15
Figure 2-6 Components of Total Wind 2-21
Figure 2-7 T-39 Mission Pacing Diagram 2-31

Figure C-1 Timed Corrections C-2

THIS PAGE INTENTIONALLY LEFT BLANK

CHAPTER ONE
LOW-LEVEL MISSION PLANNING

100. INTRODUCTION

The success of any low-level high-speed navigation flight depends heavily on preflight planning. This section covers low-level chart construction, fuel planning, and jet card/DD 175 construction particular to the T-39N aircraft.

101. LOW-LEVEL CHART PREPARATION

T-39N low-level navigation requires the use of formal Military Training Routes (MTRs) as defined in the AP-1B. Flying Visual Routes (VR) or Instrument Routes (IR) MTRs allows aircraft to fly at speeds over 250 KTS and altitudes down to 500 feet Above Ground-Level (AGL). MTR's also provide a degree of safety with respect to aircraft separation and airspace coordination. Figure 1-1 lists common routes flown by both VT-4/10. Additional low-level routes may be flown with approval from the CNATRA VNAV Stage Manager. The listing in Figure 1-2 describes the various data found in AP-1B and includes data regarding the dimensions of the route as well as operating procedures, restrictions, and hazards. Attach a copy of each route's current AP-1B listing to the back of the low-level chart along with a filled-in data worksheet and a copy of the intermediate low level route turnpoints found in Figure 1-1.

NOTE

> Complete low-level charts, minus EFRs (Expected Fuel Remaining)/ MCFs (Mission Completion Fuel), for the VR-1020, VR-1021, VR-1022, VR-1023, and VR-1056 and have an instructor check your charts for errors prior to your first VNAV event.

As with T-6 charts, T-39N missions also use the TPC (Tactical Piloting Chart) 1:500,000 scale chart. However, you may need to tape or glue two or more TPC charts together in order to meet the 20 NM (Nautical Mile) chart coverage restriction. As with your earlier chart construction, verify your chart editions using the most current Chart Update Manual (CHUM), FLIP (Flight Information Publications), and NOTAMs (Notice to Airmen) information since TPC charts in particular are not updated very frequently. Use corresponding Visual Flight Rules (VFR) sectional charts to update Maximum Elevation Figures (MEFs) and magnetic variation. A finished chart should be neatly drawn using black ink with appropriate hazards and route corridors highlighted in yellow.

NOTE

> When you start drawing on your chart, use thin lines so you don't cover up information that you might need. Avoid covering up information such as the altitude of towers, hazards, or other key pieces of information.

Local Routes

VR-1020 (A-E) TPC H-24B

A. POWER PLANT	N31-00.3	W088-00.4
B. BRIDGE	N31-32.8	W087-31.1
C. LOCK AND DAM	N32-05.9	W087-23.9
D. INFERRED BRIDGE	N31-24.5	W086-43.8
E. WHITE STRGE TWR (TGT)	N31-06.1	W086-33.8

VR-1021 (A-E) TPC H-24B

A. PENINSULA	N30-22.4	W088-18.8
B. BRIDGE	N30-42.8	W088-35.7
C. STORAGE TANKS	N31-15.3	W087-59.3
D. OPEN PIT MINE	N31-33.3	W088-02.3
E. SAWMILL (TGT)	N31-42.1	W087-13.4

VR-1022 (A-F) TPC H-24B

A. N. TIP HORN ISLAND	N30-15.2	W088-43.0
B. SAWMILL	N30-35.5	W088-34.2
C. BRIDGE	N30-52.7	W088-46.2
D. NORTH BRIDGE	N31-26.2	W088-32.5
E. DAM	N31-45.5	W088-07.8
F. SAWMILL (TGT)	N31-49.9	W087-19.0

VR-1023 (A-G) TPC H-24B

A. PENINSULA	N30-22.4	W088-18.8
B. SAWMILL	N30-35.5	W088-34.2
C. WIGGINS DAM	N30-52.3	W089-07.3
D. RAILROAD BRIDGE	N31-11.8	W089-23.0
E. LOOKOUT TOWER	N31-04.7	W090-02.0
F. TOWN OF OSYKA	N31-00.5	W090-28.2
G. PINE GROVE FIRE TWR	N30-42.5	W090-45.2

VR-1002 (G-K) TPC H-24B CENTRAL FLORIDA

G. SOUTH TIP ISLAND	N29-45.0	W083-35.0
H. TIP LAND INSIDE INLET	N30-03.5	W084-17.0
I. HWY INTERSECTION	N30-25.0	W083-54.0
J. POWERPLANT	N30-22.0	W083-11.0
K. TOWN OF DUPONT (TGT)	N30-59.0	W082-54.0

VR-1055 (C-G) TPC G-21D NORTHERN ALABAMA

C. DAM	N34-36.36	W084-40.13
D. MICROWAVE TOWER	N34-38.05	W085-27.53
E. THUMB PENINSULA	N34-10.17	W085-27.40
E1. ABERNATHY	N33-38.57	W085-24.34
F. SOUTHERN INLET	N33-00.22	W085-14.56
G. DAM (TGT)	N32-40.52	W085-54.39

Other Common Routes

VR-1006 (F-J) TPC H-25A/D SOUTH FLORIDA

F. S. TIP PENN/OIL TANKS	N26-43.5	W082-15.6
F1. MULTIPLE OBSTRUCT	N26-46.6	W081-50.9
G. HWY BRIDGE	N26-50.0	W081-11.5
I. BRIDGE	N27-11.4	W080-45.4
J. N SHORE OF LAKE (TGT)	N27-45.8	W080-46.0

VR-1006 (G-N) TPC H-25A/D SOUTH FLORIDA

G. ROAD/HWY BRIDGE	N26-50.0	W081-11.5
I. BRIDGE	N27-11.4	W080-45.4
J. N SHORE OF LAKE	N27-45.8	W080-46.0
K. MAIN HWY BRIDGE	N28-04.8	W081-15.5
L. TOWER	N28-17.6	W081-50.3
M. BRIDGE OVER WATER	N28-35.0	W082-13.4
N. DAM (TGT)	N29-00.5	W082-37.2

VR-1006 (K-Q) TPC H-25A/D SOUTH FLORIDA

K. MAIN HWY BRIDG	N28-04.8	W081-15.5
L. TOWER	N28-17.6	W081-50.3
M. BRIDGE OVER WATER	N28-35.0	W082-13.4
N. DAM	N29-00.5	W082-37.2
O. FIRE TOWER	N29-14.8	W082-55.8
P. BRIDGE	N29-40.1	W083-22.8
Q. HWY BRIDGE (TGT)	N29-47.8	W082-55.4

VR-1040 (A-H) TPC-21C CHARLESTON

A. WEST TIP OF INLET	N33-54.5	W078-22.8
B. CAPE FEAR BRIDGE	N34-23.5	W078-16.0
C. INFERRED RD BRIDGE	N34-26.6	W078-57.7
D. INFERRED RD BRIDGE	N34-49.0	W079-40.5
E. TOWER	N33-32.7	W079-46.6
F. ROAD/RR OVERPASS	N33-20.0	W079-57.1
G. INFERRED RD BRIDGE	N33-08.4	W080-20.8
H. ROAD BRIDGE (TGT)	N32-20.4	W080-28.0

VR-189 (B-G) TPC-19D ARKANSAS

B. DAM	N34-09.0	W093-43.0
C. CHANNEL ON LAKE	N34-33.5	W093-21.6
E. DAM	N34-57.1	W093-09.5
F. DAM	N35-06.0	W093-39.0
G. DAM (TGT)	N34-36.0	W094-22.0

VR-1056 (D-H) TPC G-21D NORTHERN ALABAMA

D. BRIDGE	N34-14.4	W085-36.1
E. RAILROAD BRIDGE	N34-57.2	W085-42.1
F. DOWNTOWN ALTAMONT	N35-25.8	W085-43.3
G. DAM / BRIDGE	N35-37.3	W084-46.7
H. TOWN OF TALLICO PLAINS	N35-21.8	W084-17.6

Figure 1-1 Intermediate Low-level Routes

1-2 LOW-LEVEL MISSION PLANNING

VR-1020

1

ORIGINATING/SCHEDULING ACTIVITY:
FACSFACNPA, NAS Pensacola FL 32508-5000 DSN 922-2735 C904-452-2735.

2

HOURS OF OPERATION: 1200-0400Z++ weekdays, occasional weekends.

3

ROUTE DESCRIPTION:

4

Altitude Data	Pt	Fac/Rad/Dist	Lat/Long
As assigned to	A	SJI 043/25	31°00.0'N 88°00.0'W
10 AGL B 15 AGL to	B	MVC 299/10	31°33.0'N 87°31.0'W
10 AGL B 15 AGL to	C	MVC 352/37	32°05.0'N 87°24.0'W
10 AGL B 15 AGL to	D	CEW 352/34	31°24.0'N 86°44.0'W
Maintain 15 AGL to	E	CEW 016/17	31°06.0'N 86°34.0'W

5

ROUTE WIDTH - 5 NM either side of centerline.

6

Special Operating Procedures:
(1) Minimum altitude 1000' AGL except from Point D to E which is 1500' AGL.
(2) CAUTION: Several training routes cross between B and D.
(3) Aircraft are required to transmit in the blind on 280.1 MHz their intention to transit Camden Ridge MOA after Point B.
(4) Maximum airspeed 420 KTAS Mon-Fri.
(5) Noise sensitive areas: The following areas should be avoided by 1500' AGL or 3 NM.
(a) Catherine (Town) - 32°11'N 87°28'W
(b) House - 32°08'N 87°25'W
(c) Paper Mill - 31°58'N 87°29'W
(d) Thomasville (Town) - 31°55'N 87°44'W
(e) Choctaw National Wildlife Refuge Area - centered at 31°28'N 88°11'W, located along the Tombigee River.
(f) Coffeeville (Town) - 31°45'25"N 88°05'03"W
(g) Salipta (Town) - 31°38'N 88°02'W
(6) CAUTION: Between Pt B and C, 31°35'00"N 87°29'21"W, Chimney 375' AGL/444' MSL.
(7) CAUTION: Between Pt C and D, 31°44'27"N 87°02'05"W, Antenna Tower 248' AGL/788' MSL.

7

FSS's Within 100 NM Radius:
ANB, GNV

Figure 1-2 AP-1B

1. The office tasked with scheduling this route is the owner of the route.

2. Note hours of operation; in Zulu time.

3. This section outlines both the horizontal and vertical limits of the route.

4. "Decoding" the first and second lines, we read from point A to point B, we are required to fly between 1000 and 1500 feet AGL. The AP-1B points are defined by both NAVAID (Navigational Aid) Radial/DME (Distance Measuring Equipment) and coordinates.

5. Additionally, route width is important as it defines the horizontal limits of the route which are drawn from the AP-1B points.

6. Noise sensitive areas, in-flight hazards, and non-standard operating procedures are found in this section.

7. These are the flight services associated with the geographic location of the route.

102. ROUTE CORRIDORS

The AP-1B gives specific coordinates to plot defining the route for filing and course tolerance purposes. However, these points may or may not have visual significance. Since the route is flown using visual references as a primary means of navigation, we normally take the most visually significant point within 1/2 NM of the AP-1B coordinates (but not always). You need to plot the AP-1B point and leave that marked as a pencil dot.

The route corridor as defined in the AP-1B needs to be drawn based upon the AP-1B points NOT the selected turnpoints. A simple technique for drawing route corridors is to draw circles equal to the route width about each AB-1B point. For example, if your route changes at Point C from 2 NM to 5 NM, draw both circles about that point. Now draw tangential lines between the appropriate circles for that particular leg. Next, draw a line perpendicular to the centerline of the inbound leg at each respective AP-1B point. The corridor/route width then applies from where the previous route width ended to that perpendicular line for each AP-1B point. Be sure to include the route width about turns, so if you have a 5 NM route width that does not change between two legs with a 90° turn there should not be a corner on the outside edge. Now erase all lines and markings inside the route structure. Leave the entry and exit of the route open or in other words, do not close the route in. The final step is to highlight the edges, but wait until you have circled the selected turnpoints because you do not want to have a highlighted corridor inside your turnpoint circle. Corridors are to be highlighted in yellow except inside turnpoint circles - do not use pink, green, or blue highlighter on a tactical chart because these colors are hard to see.

Step 1. Draw the AP-1B points on your chart.

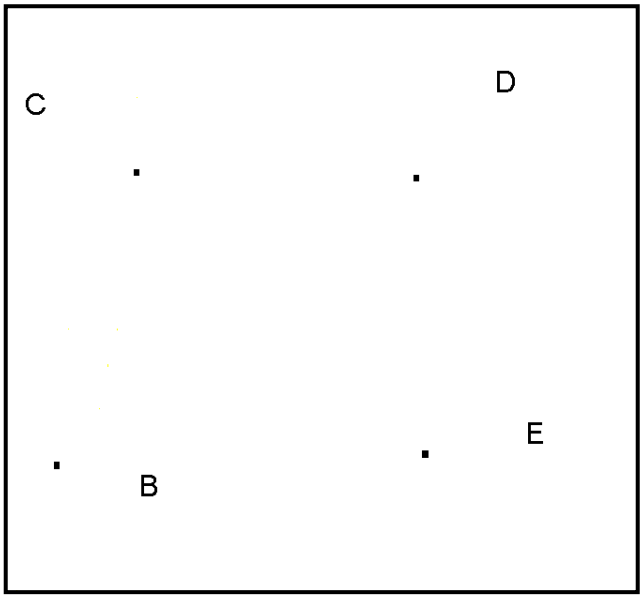

Figure 1-3 Drawing Corridors Step 1

Step 2. Determine the route width for each leg by referencing the AP-1B. For our example B-C is 2 NM either side of course while C-D is 5 NM either side. Now using a compass, very lightly (to be erased later) draw a circle about each route point for the applicable route width.

NOTE

At Point C there are 2 different widths so draw both of them.

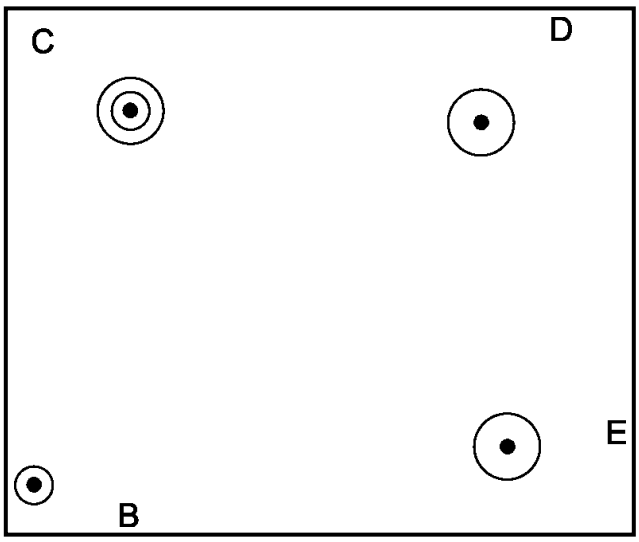

Figure 1-4 Drawing Corridors Step 2

Step 3. Now draw tangential lines to connect the circles.

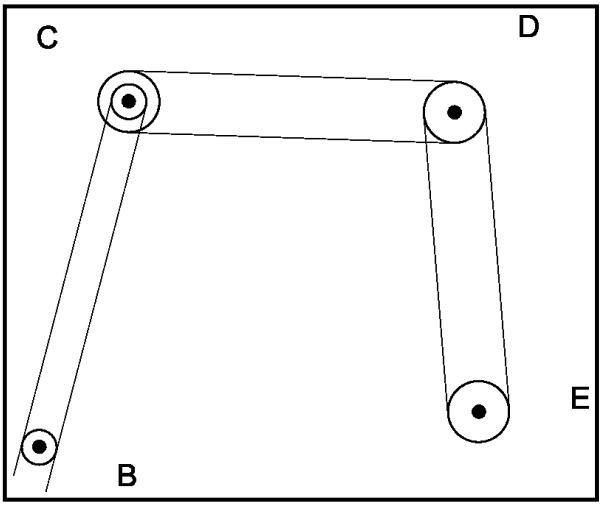

Figure 1-5 Drawing Corridors Step 3

Step 4. When you have multiple route corridors, as at Point C, draw a line perpendicular to the inbound leg through the turnpoint from the centerline of the AP-1B points. In this example, the line is drawn through Point C and is perpendicular to the centerline of AP-1B Point B and Point C. The outside corridor changes at this line, the inside corridor is where the two tangent lines intersect. Note, with the outside edge, do not make a corner, but make sure it continues with a radius that is the same as the route width, however the inside line usually makes a corner.

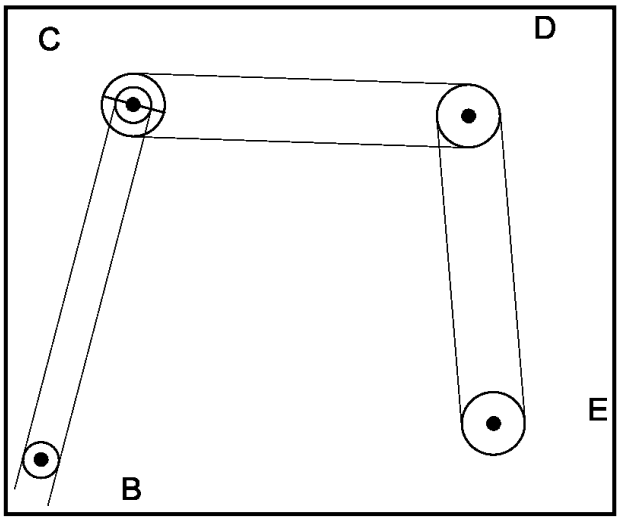

Figure 1-6 Drawing Corridors Step 4

Step 5. Finally it is time to erase. Erase the centerlines that were drawn and any part of the circles that do not form an edge. Do NOT erase the AP-1B pencil dots.

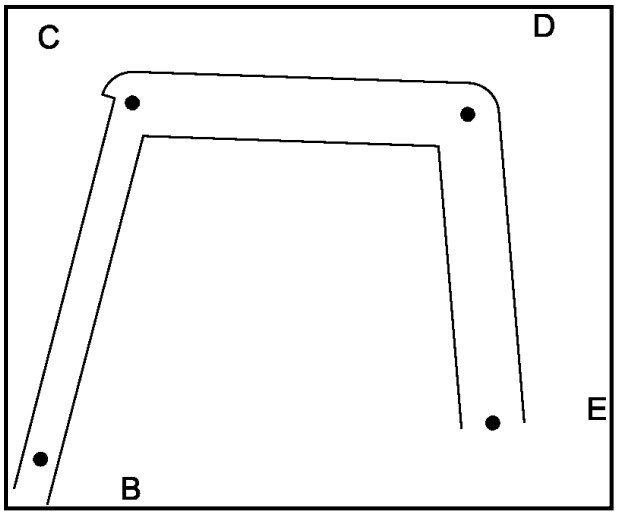

Figure 1-7 Drawing Corridors Step 5

Step 6. Do not "close in" the route at the entry and exit points. Note the turn at Point C, the circle drawn for the route width is now the turn radius of the corridor. At Point B, where the route changes, simply erase the exterior part of the circle outside the tangent lines. Before you can highlight the outer edges, you must draw your turnpoint circles and route turn radius in black. Do NOT highlight inside the turnpoint circle.

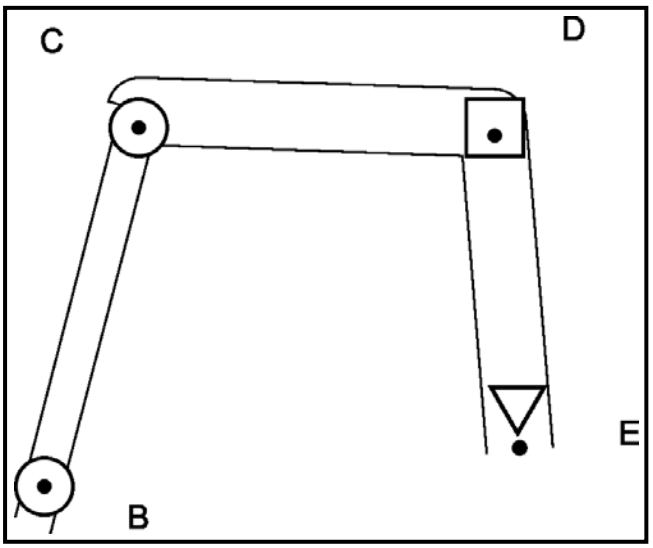

Figure 1-8 Drawing Corridors Step 6

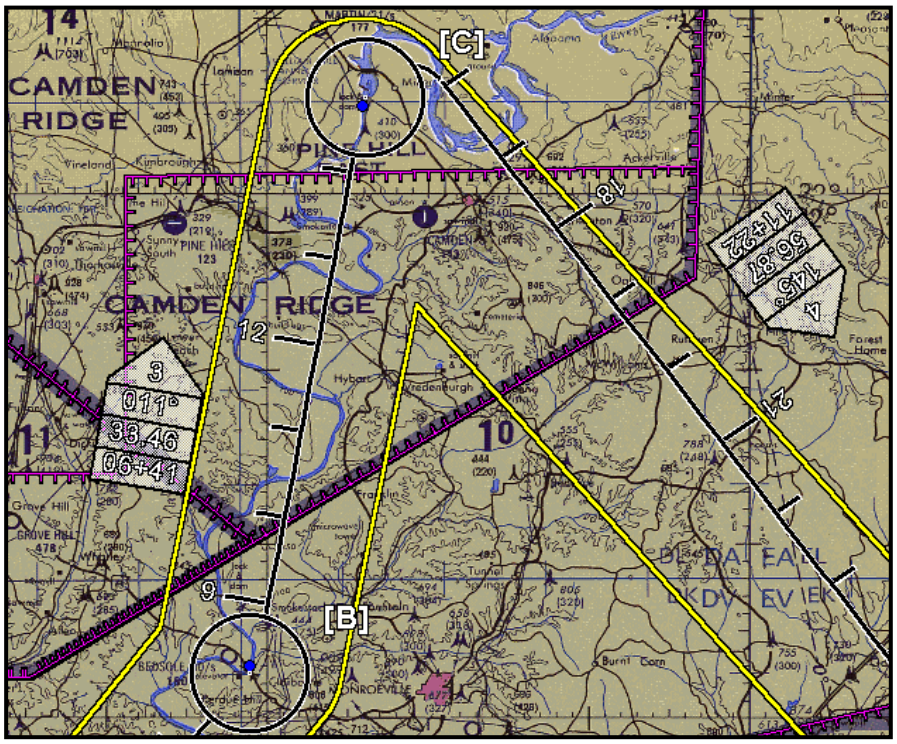

Figure 1-9 Route Corridor VR1020

103. PLOTTING COURSE LINES AND TURNPOINTS

A course line represents the actual path over the ground the aircraft follows when flying the low-level route. In drawing T-6 charts, the turn radius was not a consideration due to the slower airspeed and small turn radius of the T-6. However, in T-39N low-level mission planning, a turn radius is necessary for every turn of 30º or more.

At 300 KTS (knots) TAS (True Airspeed) the T-39N turn radius using 30º angle of bank is close to 2.5 NM radius with a diameter of close to 5 NM. For a TPC chart use the 300 knot circle on the corner of the combat plotter.

Turnpoints are depicted as 7/8 inch circles. The target shall be drawn as an isosceles triangle with 5 NM leg lengths. One side of the triangle shall be drawn perpendicular to the target leg course. The point prior to the target is known as the Initial Point (IP). The IP is drawn as a square with 5 NM lengths on its sides. The square is also drawn so that its side is drawn perpendicular to the target leg course.

In Figure 1-10 no turn radius is drawn between B and C because the turn is less than 30º.

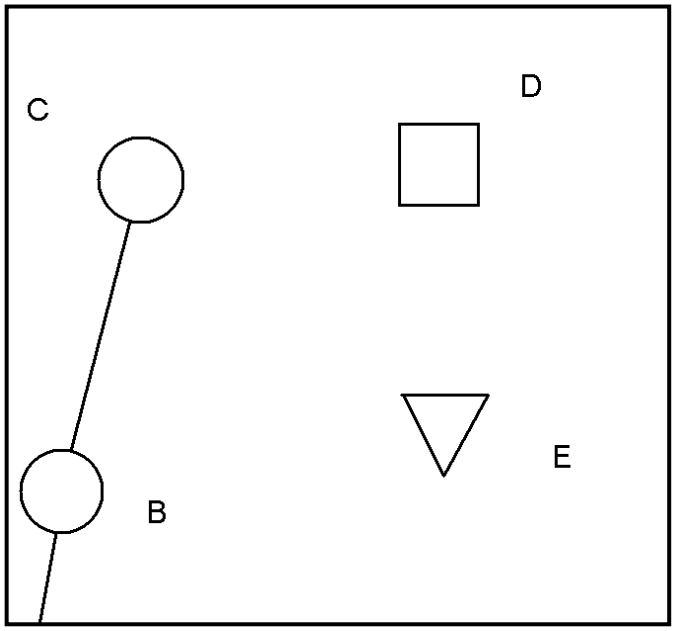

Figure 1-10 No Turn Radius

Figure 1-11, a turn radius is required from C-D. Align the straight edge of the combat plotter to the inbound course and trace the turn radius out of the turnpoint using the 300 knot circle. Be sure to draw the turn radius lightly in pencil, as it will usually be erased later.

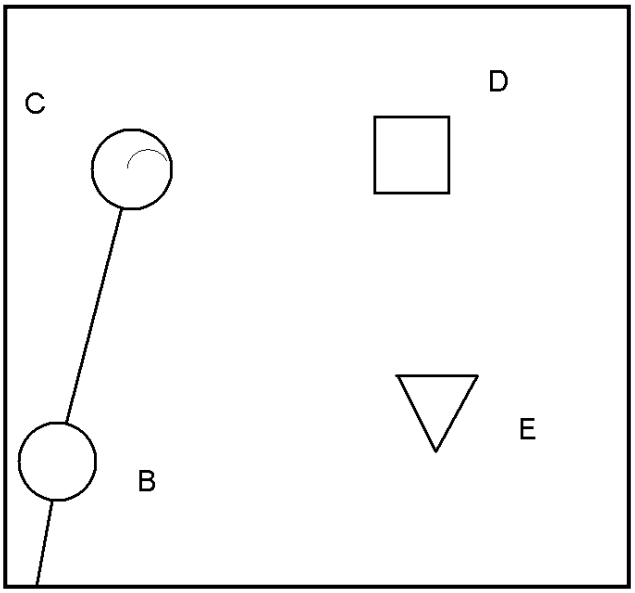

Figure 1-11 Turn Radius

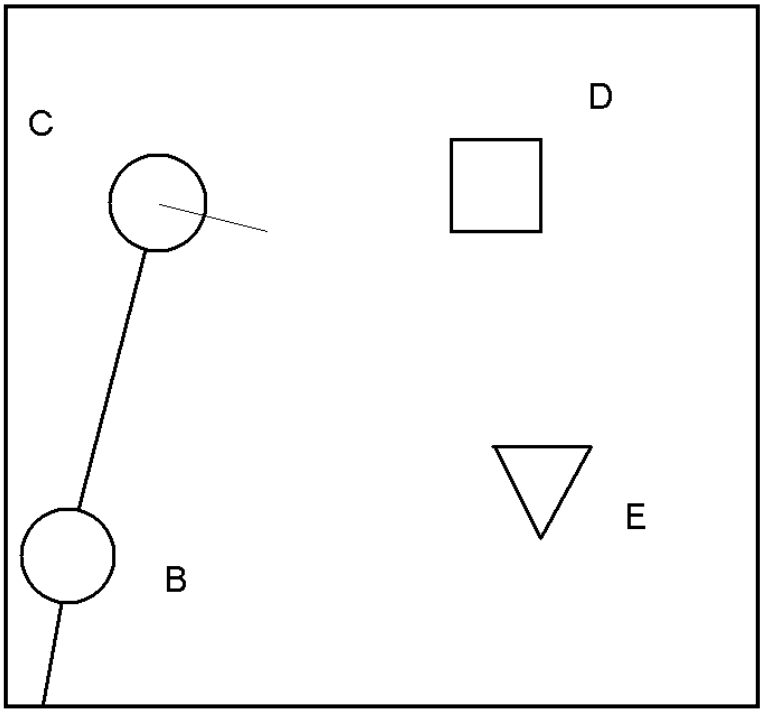

Figure 1-12 Compass Technique

An additional technique is to use a compass. Set the compass for the correct turn radius then place the pencil end on your turnpoint. Place the other end along the perpendicular line about 3 NM away and lightly draw the arc.

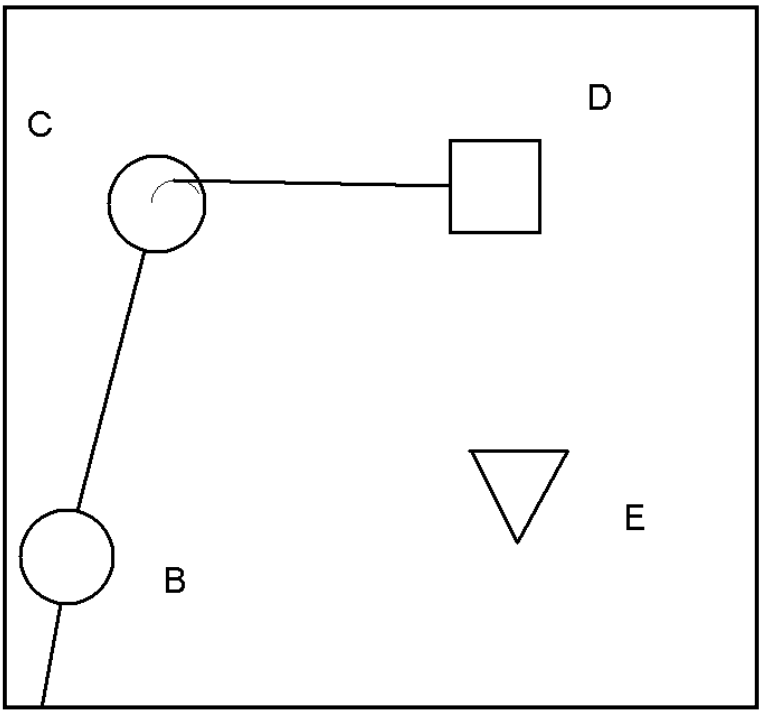

Figure 1-13 Course Lines

Draw the course backwards from the next turnpoint to a tangent on the turn radius.

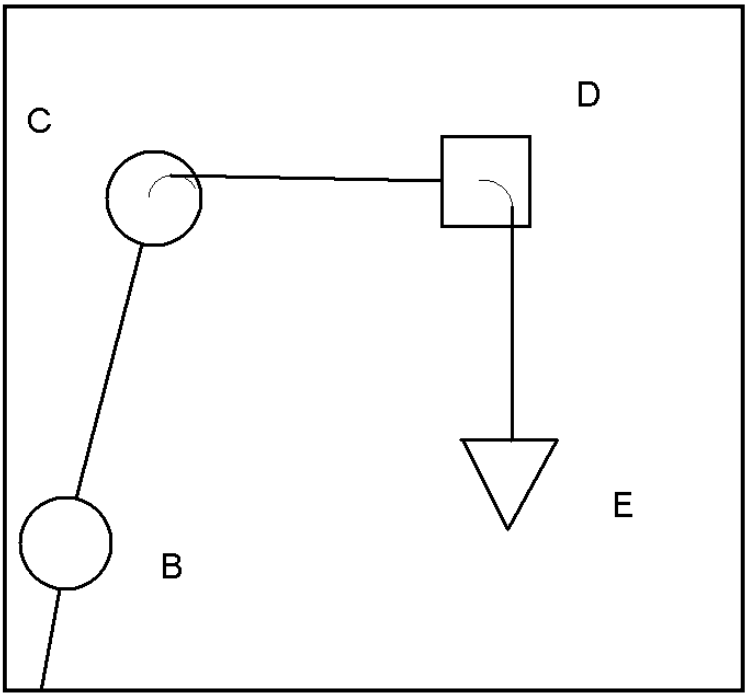

Figure 1-14 IP and Target Leg

Turn radius at VT-4/10 will be drawn even at the IP (some combat aircraft will not and require being on heading crossing the IP). You may want to draw the IP square and target triangle after the target leg course has been drawn to help you orient them correctly.

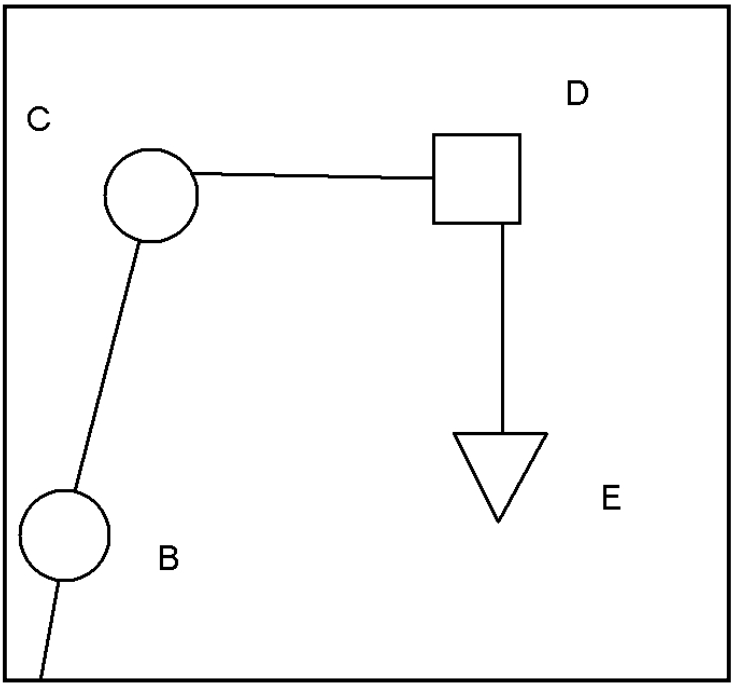

Figure 1-15 Erase

Erase all markings inside the turnpoint circles, IP, and target except for CHUM and AP-1B dots.

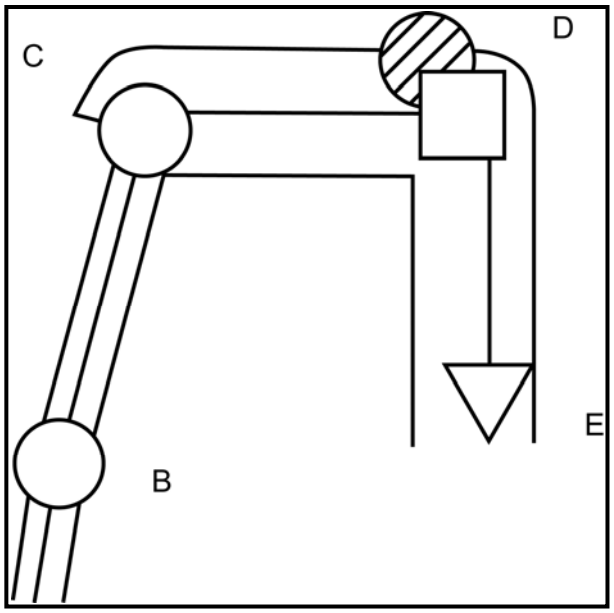

Figure 1-16 Usable Chart

Measure the true course for each leg along the plotted course line using the same technique as used for T-6 charts. Apply magnetic variation to obtain the magnetic course and remember the east variation is subtracted from true course and west variation is added. East is least, west is best. Be sure to use current magnetic variation by referencing a current VFR sectional chart. Record these courses in the data table just like you did for your T-6 charts.

The difference in measuring T-39N distances is the turn radius. To measure this distance, a pair of dividers may be spanned to represent 1 NM, and then "walked" around the turn. The easiest method is to use the combat plotter and measure the distance of the turn by counting the 1 NM tick marks around the outside edge of the 300 knot circle. Measure the distance flown for the turn, and then add the remaining distance measured from the roll out to the next point. Measure the distance flown for the turn and add the remaining distance measured from the rollout to the next point. Another technique is to divide the number of degrees of turn by 40 (40° of heading change equals 1 NM. 360° = 9 NM then 40° = 1 NM). If the aircraft is planned to turn 74°, the distance would be approximately 2.0 NM. Round all distances to the nearest .5 NM. If using a pair of dividers to "step" out the distance of the turn, use the same technique, adding the distance for the turn to the remaining leg distance.

T-39N visual navigation within established low-level routes is based on flying AGL altitudes rather than MSL (Mean Sea Level) altitudes. Intermediate and Advanced low-level routes are flown at 500 feet AGL or the lowest AP-1B allowed altitude, whichever is higher. The 500 foot minimum restriction comes from the TW-6 Low Altitude Training Rules, but a higher prescribed altitude in the AP-1B takes precedence.

For example, if the AP-1B dictates the route altitude structure from Point A to Point B is 500 to 1500 feet AGL, then that leg is flown at 500 feet AGL. If, according to the AP-1B, the minimum route altitude is 700 feet AGL, then the route is flown at 700 feet AGL.

In T-6 chart preparation, the altitude for each leg is placed in the appropriate information box or "dog house". For T-39N charts, the altitude listed in the information box shall be a “safe” MSL altitude for that leg. Compute “safe” altitudes for each leg using a current VFR sectional. Compute this altitude by adding 500 feet to the highest Maximum Elevation Figure (MEF) and/or CHUM whichever is higher affecting that leg (to include the route corridor). Examine the plotted track for a given leg, determine which latitude-longitude blocks the leg (to include the route corridor) crosses, and choose the highest MEF of those "blocks" the route crosses. In Figure 1-17, the highest MEF would be 2200 feet because the corridor is located in that block. You would then add 500 feet to acquire the “safe” altitude for that leg.

Figure 1-17 Maximum Elevation Figures

Low-Level Emergency Route Abort Altitudes (ERAA)

Compute the ERAA altitude to provide 1000 feet (2000 feet “mountainous” (VR-1056)) clearance above the highest obstacle within 25 NM either side of the route. Note that this is calculated from the AP-1B centerline, NOT the FTI created centerline. Local routes (VR-1020, -1021, -1022, -1023) shall be considered “non-mountainous.” One single ERAA shall be calculated, annotated on the low-level chart, and briefed by the student for that particular VNAV route. The ERAA shall be annotated near the beginning of the low-level entry point and will look like the following -- ERAA XXXX'.

A Note Regarding MEF Values:

Maximum Elevation Figures are computed by National Imagery and Mapping Agency (NIMA) and take into account both terrain and obstacles.

- If the highest feature within a Latitude/Longitude grid is terrain, NIMA adds 200 feet to the terrain elevation, plus the vertical accuracy of the identified point. This value is then rounded to the next hundred-foot value.
- If the highest vertical obstruction (man-made) is higher than the highest terrain elevation plus 200 feet, then the MEF is computed using the elevation of the obstruction plus its vertical accuracy, then rounded to the next higher hundred-foot value.
- It is critical to keep in mind the MEF may give ***over 200 feet or less than 50 feet of clearance***, and does not necessarily insure absolute clearance of terrain or obstacles.

DMAAC (MC) SOP 8440.2, 1 DEC 1989.

104. CHART ANNOTATIONS

The T-39N VNAV is planned to fly at 300 KTS groundspeed, which equates to 5 miles per minute or 1 mile every 12 seconds. As distances are rounded to the nearest .5 mile, the leg times should be in multiples of six seconds (.5 NM = 6sec at 300 KTS). Record and total the time computations on the data worksheet. Draw time ticks at 1 minute intervals. At 300 KTS, time ticks will be drawn every 5 NMs. Each time tick extends 3 miles either side of track, with each third tick extending 5 miles. For legs following the first leg, measure time tick distance backwards along the track. Time ticks are labeled at every third minute, and all annotations are in black ink.

Determine BINGO information to include fuel, heading, altitude and enter data in each "doghouse" along the route. Derive this information by measuring the distance from each point direct to the planned destination; do not use a turn radius. For out of area low-level routes use either the departure field or destination field, whichever is closer.

Annotate divert fields as: a 5 NM square for military, and a 5 NM triangle for emergency diverts with NAVAID and frequency data annotated under the symbol. The T-39N diverts require 5000 feet of hard surface runway. Military diverts require some form of military presence (Coast Guard, Reserve, etc.).

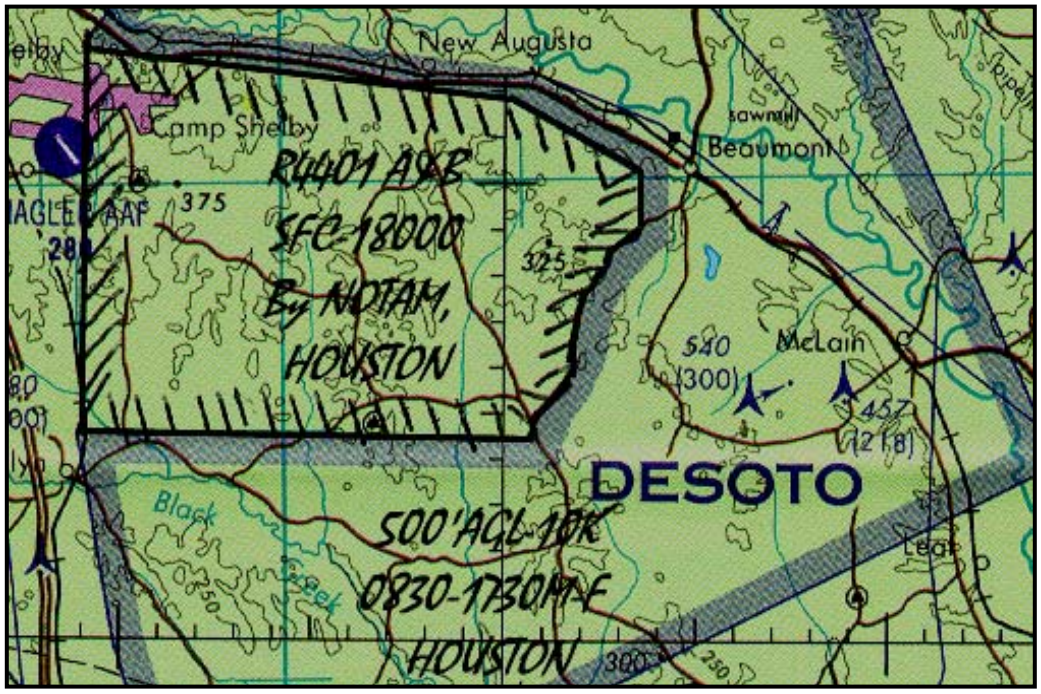

Figure 1-18 Airspace Annotations

Plot Class B, C and D airspace just like you did for your T-6 charts. Refer to VFR sectional charts, low enroute charts, and AP-1A to determine what airspace falls within 20 NM of the low-level route. While special use airspace boundaries are commonly printed on TPC charts, they are frequently incorrect and do not indicate altitudes or operating hours.

1. Annotate restricted airspace boundaries on your chart with hatched black lines (Figure 1-18).

2. Annotate within all airspace boundries the associated altitudes, operating hours, and controlling authority for the airspace (Figure 1-18).

3. Update mission materials using NOTAMs, the Chart Update Manual (CHUM), and AP-1B (FLIP). Include CHUM date and Chart edition on data worksheet. This needs to be done because the charts you acquire are not necessarily up to date and towers, power lines, and things of that nature are not always up to date on the charts. Therefore, the use of the CHUM manual or ECHUM (Electronic CHUM) will help in avoiding hazards. CHUM all low-level charts within 10 NM of course. The web address for ECHUM:
https://aero.geointel.nga.mil/products/webchum/index.cfm

4. Noise sensitive areas are found in both the AP-1B and NOTAMs. Use a black-hatched circle (3 NM radius) to annotate these areas. Unless specified differently in AP-1B, these must be avoided by 3 NM or 1500 feet AGL and while flying, you will climb to 1500 feet AGL, but you do have the option to avoid the area by 3 NMs which then allows you to remain at 500 feet AGL.

5. Unless specified differently in AP-1B, avoid all airports by 3 NM or 1500 feet AGL.

6. Circles may fall inside 3 NM of course centerline, but do not extend them inside a turnpoint circle.

7. Annotate the route entry and exit radial/DMEs at the respective point.

8. Have Air Traffic Control (ATC) frequencies for each center sector or approach control written along your low-level route in case you exit the low-level and need an IFR pick-up.

9. Only CHUM annotations are allowed in the turnpoint circle.

10. Highlight route corridors and hazards (obstructions above 300 feet AGL or airfields).

11. Print name, rank, class number, and route name in lower right hand corner in black ink.

12. The first and subsequent information stamps contain the heading, safe altitude, distance, and leg time to the next point. The last information stamp contains BINGO information at the target and the first altitude planned upon low-level exit. The heading on the last information stamp is not the heading back to base, but your heading to the next point you navigate to. This is because the heading back to base is in the BINGO block of the stamp.

13. When applying stamps to the chart, place them parallel with the leg they pertain to, but outside the route corridor and not within 5 NM of route centerline. Record the data from the work-sheet into the stamps while checking for reciprocal heading errors and other mistakes. Try not to cover up pertinent information such as hazards or divert fields with your stamps.

14. While fix procedures are covered in detail in the next unit, choosing checkpoints is an important part of chart preparation and mission planning. Review the T-6 text, Chapter Three for specific guidance on what features make for an effective checkpoint. Keep in mind that in T-39Ns you will fly lower, so vertical development should be utilized when able. In addition to choosing checkpoints based on their visual characteristics also consider the over-all pacing of the low-level sortie. This is simply asking, *"When, during this low-level, do I want to have a fix?"* The recommendations discussed in T-6 procedures still hold true: Checkpoints within two-minutes prior detract from two-minute calls and looking for the turnpoint, while checkpoints within one and a half minutes after a turnpoint interfere with wings level calls and multiply minor errors of timing and course. What is a good schedule for fixing? One technique is to have a fix every three to four minutes. Using this pacing, time is allotted for proper analysis, compensation, and correction, as well as allowing convenient use of the four to six minute rules. In addition, you should try to have more than one intermediate checkpoint on each leg, and with some long legs, having three intermediate checkpoints is very helpful to having a successful low level. Annotate the times of your selected intermediate checkpoints outside the route corridor and if the checkpoint is not on course, write down how far left or right it is from course for quicker reference in flight.

15. Trim your chart as necessary, leaving at least 20 NM of area coverage around chart points and centerlines. Be sure to leave your departure or destination airfield and your filed alternate on the chart (do not trim off the chart if possible).

16. Affix a copy of the applicable AP-1B extract, FTI turnpoints, and the completed worksheet to the back of the chart.

17. Sign the chart in black ballpoint pen near the middle of the route.

18. Crosscheck your charts with other students and then have an instructor check them prior to your first VNAV event. Refer to Appendix C, page C-1 for the chart checklist.

105. LOW-LEVEL FUEL PLANNING

For T-39N aircraft, use a fixed fuel flow of 3000 lbs/hr to plan your low-level. This yields 50 lbs per minute fuel flow. Round computed data up to 10-pound increments. Thus 193 lbs. of fuel consumed becomes 200 lbs. All sorties are planned to start with a standard fuel quantity (7200 lbs.). From this initial amount, subtract the start, taxi, and takeoff (STTO) amount (assume 400 lbs., leaving 6800 lbs.). Refer to the IFG for initial climb fuel computations.

NOTE

Each student must have a completed chart, jet card, backup "Alpha" route jet card, and DD-175 for each low-level sortie prior to the brief.

Some sorties may be planned to allow two students to receive low-level training in one flight referred to as a double low-level. For example, student #1 flies the departure phase through the first low-level route while student #2 flies the second low-level route through the approach phase. This profile (illustrated in Figure 1-19) includes local area low-level routes incorporated in stereo flight plans. Even though a stereo route is filed, a practice DD-175 is still required from both students. Refer to the IFG for TW-6 stereo routes.

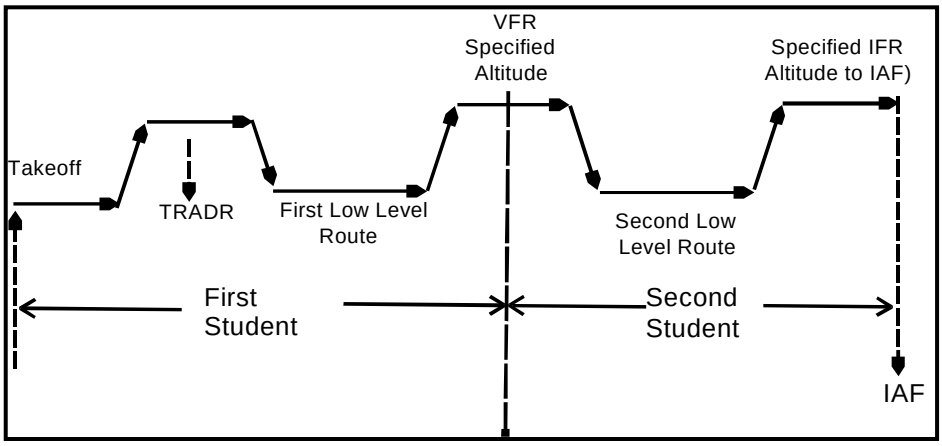

Figure 1-19 Stereo Route Profile

The primary purpose of a jet card is to determine mission completion feasibility. Simply put, "Do we have enough fuel to complete the mission?" For sorties incorporating two low-levels, certain assumptions can be made regarding the portion of flight between the two low-level routes.

For low-level missions using stereo routing, the fuel planning profile is broken into five segments:

1. Takeoff, departure to entry point of first low-level

2. The first low-level route

3. The interim VFR leg

4. The second low-level route

5. The IFR return portion

NOTE

The IFG shall be used for flight planning computations.

First, with the climb distance and fuels computed, measure a total distance from departure to the low-level entry point along the route of flight. Summing the distances from takeoff to low-level entry, subtract out the distance spent climbing or descending. Plan this remaining distance using the cruise fuel flow table located in the IFG. Remember to apply winds to the cruise portions of your fuel plan. Computing an Estimated Fuel Remaining (EFR) for the first entry point completes this segment.

Second, with an EFR for the entry point, compute the remaining EFRs for the first low-level by subtracting out the fuel consumed on each leg. If you are designated as the first student to fly, enter this data in both the data worksheet and in the information stamps of the low-level chart. On the jet card, your route of flight should include planning all the way to the entry point. On the line following the entry point, simply enter the route description (VR-1020, 1021, etc) and the total fuel estimated for the low-level (Figure 1-20). Computing an EFR for the first low-level exit point completes this segment.

Third, for the interim leg, assume the extra fuel required to climb to planned cruise altitude offsets fuel saved in the descent to the second low-level entry. To apply these assumptions, measure the distance along the planned routing. Apply wind affect to the applicable airspeed to derive a groundspeed and derive a total time between the first low-level exit and the second low-level entry. Next, use this time to compute the fuel consumed during the VFR enroute portion. Therefore, you do not have to compute the climb and descent fuels during this portion of the flight. Complete this segment by taking the distance and time from the first low-level exit point to the second low-level entry point and compute the fuel burned.

Complete the fourth segment, the second low-level route, just as the first. If you are designated as the second student to fly, use the EFR for the second entry to compute low-level chart fuel data (EFR).

Fifth and last, for the remaining portion of the fuel plan, use the climb chart to determine fuel, distance and time to climb to the altitude listed in the stereo route description. Again, remember to compute the groundspeed using preflight winds. Computing an EFR at the IAF (Initial Approach Fix) completes this segment.

Because winds affect fuel consumed, EFR and Mission Completion Fuels (MCF) data may not be computed earlier than 12 hours prior to the flight. MCF must consider the possibility of needing an alternate for forecasted weather (realize an alternate is always required by CNATRA).

With the five segments complete and an EFR for the IAF, the next step is to compute MCF for each low-level point. The following information applies to T-39N MCF computation:

1. Minimum fuel is 1100 lbs. (COMTRAWINGSIXINST 3710.1E)

2. Missions are planned for one approach to a full stop.

3. Assume 400 lbs. for each approach.

The MCF is the fuel at each point that would result in mission completion with the minimum fuel required (considering an alternate). Using the above data, note that the minimum fuel at the IAF for NPA is 1500 lbs. (1100+400). If you are going to use Mobile Regional (MOB) as your alternate, and MOB weather is VMC (Visual Meteorological Conditions), then looking at the Divert Data table of the IFG, the required amount of fuel at the IAF for NPA is 1900#s. However, if MOB is IMC (Instrument Meteorological Conditions), then the required amount of fuel at the IAF at NPA is 2300#s.

Example: After computing enroute fuel requirements, the jet card shows 2900 lbs of fuel estimated remaining at the IAF. Our alternate is Mobile Regional. The WX (weather) is VMC and using our IFG Divert Data table see that divert fuel is 1900#s. From the chart data worksheet, the following EFRs are noted:

Pt. A: 6000 Pt. B: 5200 Pt. C: 4570

The equation for MCF: $MCF_{pt} = EFR_{pt} - (EFR_{iaf} - \text{divert fuel})$

Therefore, for our example: $MCF_{pt} = EFR_{pt} - (2900\text{lbs} - 1900\text{lbs})$
$MCF_{pt} = EFR_{pt} - 1000$

This gives the following data:

Pt. A: 6000	Pt. B: 5200	Pt. C: 4570
$MCF_{Pt.\ A}$: 5000	$MCF_{Pt.\ B}$: 4200	$MCF_{Pt.\ C}$: 3570

NOTE

Use the Divert Data of the IFG to consider an appropriate alternate to file. Your new minimum fuel therefore will be based on this IFG fuel required to get to the alternate.

In other words, MCF is the fuel required to fly the entire mission profile, return to your destination, continue on to your alternate, and then accomplish a visual or an instrument approach (weather dictating).

If fog is rolling in on the coastline yet the low-level has good weather, and you decided the best alternate is Maxwell AFB, which is IMC, as an example. The new fuel that is required at the NPA IAF now becomes 2850 for this scenario. Using our MCF fuels for the EFR from above example is:

$MCF_{pt} = EFR_{pt} - (EFR_{iaf} - 2850lbs)$

Pt. A: 6000	Pt. B: 5200	Pt. C: 4570
$MCF_{Pt.\ A}$: 5950	$MCF_{Pt.\ B}$: 5150	$MCF_{Pt.\ C}$: 4520

106. JET LOG CONSTRUCTION

T-39N jet card is similar to the T-6 jet card but reflects higher fuel flows, greater distances, and many times two low-level portions. When stereo routes are flown with two students, each student will have a jet card, differing only in how each student rounded fuel and time data. However, if each student rounded fuel and time data correctly, then each jet log card should be exactly the same. Remember all IFR portions are computed using best available wind information forecast within 12 hours of flight.

Some additional points to consider when preparing your jet card are:

1. First line on card represents initial climb fuel plus the STTO fuels. As a result, the fuel plan on the back of the card will show item 6 blank (Figure 1-21).

2. For sorties returning to NPA from the VR-1020, a divert profile at "Initial Approach Altitude" is not required as such would be impractical in flight since you are only climbing to 8000 feet. However, this profile is required for your other sorties since you will be flying back at a higher altitude than the altitude that is required to shoot the Hi-TACAN approach into NPA.

3. Alternate information on the jet card shall correspond to the alternated listed on the DD 175.

4. Route Portion - The total low-level route fuel and time is displayed on a single line. The line prior describes the heading, fuel, and time to the entry point. The "takeoff to descent" and the "exit climb to IFR" portions are done in the same manner. IFR portions are wind corrected.

5. On the front of the jet log use the furthest bottom line under the alternate line to annotate the normal divert fuel profile from the Divert Data table of the IFG. Include field, heading, distance, altitude, and fuel.

6. On the back of the jet log include fuel required for three different fuel profiles to include last cruising altitude, initial approach altitude, and BINGO profile.

FLIGHT LOG NPA 500

DEP ELEV 30'	CLNC DELIV 268.7	GND CONT 366.4	TOWER 340.2
ALT CORR	WIND AT ALT 130/5	TAS 300	LBS/ HR, LBS/MIN 3000/50

CLEARANCE C1 Via

Squawk:

DEPARTURE	TIME OFF	
DEST ELEV 30'	APC CONT 119.0	TOWER 340.2	GND CONT 336.4

ROUTE TO	IDENT / CHAN	CUS	DIST 512	1+42 ETE 103	ETA / ATA	LEG FUEL	EFR / AFR	+ / -	IAF	CRAB GS	MISC
D→ L/O	NPA / 119	340	12 / 500	B / 100-		630	6570				
NPA 340/27 ENSLY	NPA / 119	340	15 / 485	3 / 97-		130	6440				
SJI 081/35 BRATT	SJI / 100	261	10 / 475	2 / 95-		90	6350				
SJI 043/25 PT.A	SJI / 100	310	22 / 453	4- / 91		200	6150				
VR-1020		VFR	152 / 301	30- / 60-		1530	4620				
SJI 081/35 BRATT	SJI / 100	247	60 / 241	12 / 48-		520	4100				
SJI 043/25 PT.A	SJI / 100	310	22 / 219	4- / 44		200	3900				
VR-1020		VFR	152 / 67	30- / 13-		1530	2370				
D→ L/O	CEW / 106	196	12 / 55	2- / 11		190	2180				
CEW 263/31 PENSI	CEW / 106	196	28 / 27	5- / 5-		240	1940				
D→ NPA	NPA / 119	185	27 / 0	5- / 0		240	1700				
						5500					

ALTERNATE	ROUTE	ALTITUDE	FUEL	TIME
ALT ELEV	APC CONT	TOWER	GND CONT	

DIVERT	PNS	046	10	1/GL		1600					

CNATRA-GEN 3760/14 (3-00) S/N 0197LLCF23760 (OVER)

Figure 1-20 Jet Card (Front)

FLIGHT LOG

FUEL PLAN

1. CLIMB/ROUTE DEST IAF	5500	6. START/TAXI	—
2. ROUTE ALT IAF (If required)	220	7. TOTAL REQUIRED) (4, 5, & 6)	6720
3. APPROACHES	400	8. TOTAL ABOARD	7200
4. TOTAL (1, 2, & 3)	6120	9. SPARE FUEL (8-7)	480
5. RES 10% OF 4 (Min 20 mins)	600		

EMERGENCY "BINGO" TO ALTERNATE

Figure 1-21 Jet Card (Back)

T-39 Weather Filing Requirements for Alternates			
Destination Weather ETA plus and minus one hour	ALTERNATE WEATHER ETA plus and minus one hour		
0-0 up to but not including published minimums	3000 – 3, or better		
Published minimums up to but not including 3,000 – 3, (single pilot absolute minimums 200 – ½)	NON-PRECISION	PRECISION	
	Published Minimums plus 300-1	ILS	PAR
		Published Minimums plus 200 – ½	[a]Published minimums plus 200 – ½
3,000 – 3 or better	No alternate required [b]		
a – In the case of single piloted or other aircraft with only one operable UHF/VHF transceiver, radar approach minimums may not be used as the basis for selection of an alternate airfield. b – Alternate field is always required of CNATRA assigned aircraft (CNATRAINST 3710.8)			

Figure 1-22 Alternate

107. DD 175 CONSTRUCTION

Each student will prepare a DD 175 for each sortie. The example in Figure 1-23 is for the NPA 500 stereo flight plan. While DD 175s prepared for stereo routes are not filed at base operations, students can expect their instructors to do a thorough check for accuracy on each DD 175. See GP (General Planning) Chapter 4 for further DD 175 information.

NOTE

The numbers listed below correspond to the blocks in Figure 1-23.

1. Date - date of flight.

2. Aircraft call sign- BUCK (VT-4)/ KATT (VT-10).

3. Aircraft designation/TD (transponder) code – SBR-1/A for the T-39N.

4. Type of flight plan - check what is appropriate for each line.

5. Estimated true airspeed - plan according to stereo route.

6. Point of departure.

7. Proposed departure time (Z) - for takeoff time and subsequent IFR segments enter the proposed time for beginning that segment. Adjust takeoff time such that low-level entry occurs at the flight-scheduled times. Therefore, your takeoff time may be different than what is on the schedule. If that occurs that is ok, because if you say it will take you 15 minutes to get to the entry point after takeoff, but the schedule has the takeoff time 20 minutes earlier than the scheduled low-level entry time, takeoff when we need to so that we do not hit the entry point early and have to hold and waste gas.

8. Initial cruising altitude - plan according to stereo routes.

9. Route of Flight

   a. For composite flight plans do not combine IFR and VFR route segments on the same line.

   b. If a SID (Standard Instrument Departure) is to be used, start the route of flight with the appropriate SID name and transition point.

10. For interim VFR legs enter the last point of the preceding low-level under point of departure. Enter proposed time off preceding low-level route under proposed departure time.

11. Each low-level route will be given its own line with no airspeed, point of departure or proposed departure time or altitude listed.

12. Remarks: Each training route shall be listed with identifier, entry time, and exit time in Zulu.

13. Rank/Honor - as necessary.

14. Contract pilots belong to Wing Six and their rank is annotated as CIV (Civilian).

AUTHORITY: 10 USC 8012 and EO 9397.
PRINCIPAL PURPOSE: To aid in accurate identification of personnel participating in the filed flight.
PRIVACY ACT STATEMENT
ROUTINE USES: To provide data required to process flight plans with appropriate air traffic service authorities. A file is retained by the agency processing the flight plan.
DISCLOSURE: Voluntary; however, failure to provide the SSN could result in denial of flight plan processing.

DATE	AIRCRAFT CALL SIGN	AIRCRAFT DESG AND TD CODE
1. 19 SEP 08	2. BUCK 725	3. SBR-1/A

BASE OPERATIONS USE 4. 5. 6. 7. 8. 9.

	TYPE FLT PLAN	TRUE AIRSPEED	POINT OF DEPARTURE	PROPOSED DEPARTURE TIME (Z)	ALTITUDE	ROUTE OF FLIGHT	TO	ETE
	I	300	NPA	1705	100	ENSLY BRATT SJI043025		0+15
	V					VR-1020 A-E		0+30
	V	300	CEW016017	1750	105	CEW BRATT SJI043025 10.		0+20
	V					VR-1020 A-E 11.		0+30
	I	300	CEW016017	1840	080	PENSI	NPA	0+20

REMARKS
VR-1020 E1720 X1750
VR-1020 E1810 X1840 12.

RANK AND HONOR CODE 13.

FUEL ON BD	ALTN AIRFIELD	ETE TO ALTN	NOTAMS	WEATHER	WT AND BALANCE	AIRCRAFT SERIAL NUMBER, UNIT, AND HOME STATION
3+10	VPS	0+15	X	CR-6969	NPA / 19 SEP 08	ON FILE, CTW-6, NPA

SIGNATURE OF APPROVAL AUTHORITY	CREW/PASSENGER LIST			ACTUAL DEP TIME (Z)	BASE OPERATIONS USE
		ATTACHED		SEE PSGR	

DUTY	NAME AND INITIALS	RANK	SSN	ORGANIZATION AND LOCATION
PILOT IN COMMAND	HEINO, A.J. 14.	CIV	ON FILE	CTW-6, NPA
MC	LEE, J.C.	CAPT	ON FILE	VT-4, NPA
SN	STUDENT1, I.M.	1LT	ON FILE	VT-4, NPA
SN	STUDENT2, I.M.	2LT	ON FILE	VT-4, NPA

Figure 1-23 DD 175

108. SUMMARY

In the T-39N phase of Intermediate, the student is faced with much of the same mission planning experienced in T-6 sorties. Students should not delay in completing their low-level mission materials. Flying at 500 feet and 300 KTS changes the low-level environment and presents new challenges to a student's skill level. Proper mission planning is essential to succeed in the low altitude environment.

109. ASSIGNMENT SHEET

The assignment for this block of instruction is to complete the low-level chart and mission materials for the first low-level training sortie. Expect your instructor to review and check these materials in class. At a minimum, complete the following:

1. Low-level chart, except for EFR and MCF data

2. Jet card, not including fuels and time data

3. DD 175, minus times, crew names, call signs, and date

THIS PAGE INTENTIONALLY LEFT BLANK

CHAPTER TWO
T-39N LOW-LEVEL IN-FLIGHT PROCEDURES

200. INTRODUCTION

While Chapter One focused on mission planning for low-level flights in the T-39N, this chapter emphasizes application of skills in-flight. You are now sitting up front, side-by-side with the pilot. This means you are the only crewmember who can see out the right side of the aircraft. You must clear the right side during all turns. You may be the only crewmember who actually sees an impending collision with a bird, aircraft, or tower. Flying at lower altitudes and much faster airspeed dramatically increases crew responsibility for safety of flight and therefore requires you to spend a majority of your time **LOOKING OUTSIDE!**

201. FUNDAMENTALS

The basis for air navigation is DR (Dead Reckoning). DR consists of time and heading and is a prediction of where you will be based on previously known information. Predictions are fairly accurate, and if you fly the entire route just based on time and heading, you should fly relatively close to the target environment. However, due to winds and chart error, you must update your basic DR by fixing and applying compensations for those winds and/or error. You will also need to keep track of your position and time depending on how you mark about the turnpoint. An essential element to DR navigation is to maintain a fluid scan between **CLOCK, CHART, GROUND**. In DR navigation, if you are unable to visually locate the turnpoint, then TURN ON TIME.

Scanning is probably the most important fundamental skill and is not just fixing visually but also looking for hazards, recognizing drift, and monitoring instruments. Base your scan on your mission priorities. Because safety is our over-arching goal, a good scan is required to insure the aircraft will not impact the ground (particularly during a descent from a noise sensitive area), towers or other vertical obstacles, birds (equivalent to an air-to-air missile), other aircraft, or dangerous weather conditions (thunderstorms or fog on the next leg). As a tactical NFO or WSO, the greatest danger may not be from enemy threats but rather the ground, anything attached to the ground (towers), other aircraft, birds, or your pilot.

Coincidental with a good scan is aviating, which is the main priority including clearing turns, initiating climbs and descents, setting airspeeds, and monitoring for master caution lights. Navigate is next on the list of priorities and for a low-level route your scan should be spent 90% of the time looking outside the aircraft with safety of flight your primary focus. As with learning to drive a car you will need to learn to look beyond just in front of the vehicle and look 2-3 minutes ahead. Whether it's a radar scope or looking visually, the basic skill of scanning is **BIG TO SMALL** -- funneling from a known (large, easy to see) feature and working your way down to the unknown (small, difficult to see) turnpoint or target.

Crew coordination is a dramatic change you will see starting in intermediate jets. You will need to direct the pilot by giving him concise commands (right, left, climb, descend, set) and use brevity to the maximum extent. Providing the pilot with just the right information before he

needs it is a difficult task. Pilots are a resource for you to utilize (four eyeballs instead of two) in the aircraft. They can mark points on their side of the aircraft, help you determine distances, and locate visual obstacles of interest if described in the proper format. Clear, concise, correct, and SA (Situational Awareness) enhancing communication is key to effective crew coordination.

202. PREFLIGHT PLANNING AND BRIEFING

When flying MTRs one of the first considerations is to check the weather. AP-1B states "Operations on VR MTRs shall be conducted only when the weather is at or above VFR minima. The flight visibility shall be five miles or more and flights shall not be conducted below a ceiling of less than 3000 feet AGL." Additionally, get an overall assessment of the low-level winds.

Another consideration is the bird condition along your route of flight. You will need to check the forecasted bird condition for the scheduled route at the scheduled time. Students will check the bird forecast and brief the crew of the conditions for that flight. Utilize the website http://www.usahas.com to satisfy this requirement.

You are responsible for the admin portion of every brief. Prior to briefing your instructor, familiarize yourself with the following questions so you can discuss them during the brief. If you can answer all of the questions below and are familiar with the briefing guide, your brief will cover everything. It is recommended that you start with the overall big picture and then brief the route details chronologically.

Big Picture/Briefing Flow

1. What Route are you doing?

2. What is the entry point and target point?

    a. Additionally, what time are we scheduled to enter the low-level route?

    b. What time will we hit the target?

3. What is the Route Corridor Width?

4. What is the altitude that we will fly on each leg?

    a. When do we have to climb for noise abatement areas, or for AP-1B restrictions?

    b. When will we descend after we have passed the noise abatement areas, or descend when the AP-1B says we can?

5. What is the bird condition on each leg?

6. What diverts are we planning to use?

7. Any MOAs (Military Operating Areas) that we are flying through? Who do we need to talk to and when?

Route Detail

1. How are we going to enter the route and what is our planned routing to the entry point?

   a. When will we cancel IFR?

   b. Do we have the weather to descend VFR or do we need a minimum vectoring altitude before we can cancel?

   c. What is the entry point and what kind of entry are we going to fly? Is it an outbound parallel, or is it a direct entry?

2. Then for each leg, talk about the following:

   a. What is the Heading, Airspeed and Altitude out of the turnpoint?

      - i.e., What do we want the pilot to fly?

   b. What are some key features along this route leg?

   c. Intermediate checkpoints – when, what, and where are they - on course or if not, how far left or right of course are they?

   d. Altitude changes – Is there any area on this leg that we will change altitudes for noise abatement, or AP-1B restrictions?

3. When you get to the next turnpoint or target

   a. Describe what it is?

   b. What are the funneling features? i.e., What are the Near/Far, Left/Right Side bounding features?

   c. What time are we supposed to get to that turnpoint or target?

Reviewing these questions and following the briefing guide should cover all of the low level briefing requirements**.** You should be able to describe from memory each turnpoint and the target and specific lead-in features.

203. T-39N ROUTE ENTRY CHECKLIST

When you level-off at 10,000 MSL (preferably before), you will need to give the pilot an indicated airspeed for 300 KTS TAS as filed. As a rule of thumb, subtract 5 KTS for every

thousand feet in altitude to convert TAS to Indicated Airspeed (IAS) (if you are at 10,000 feet then subtract 50 KTS from planned TAS to give an IAS of 250). Continue to navigate to your filed points and accomplish the Cruise Checklist followed by "High Level" portion of the low-level entry checks.

The Entry Checklist can be performed right after the Cruise Checklist or approximately 10 to 15 minutes prior to low-level entry. Once at low altitude, complete the "Low Level" portion. This checklist is found in the T-39N IFG. Steps are self-explanatory with the following notes:

RADALT….SET AS REQ'D
Both you and the pilot will set 90% of the lowest altitude in the DH window. Typically, the lowest altitude will be either 500 feet or 1000 feet AGL and will result in a 450 feet or 900 feet AGL DH setting**.**

Route Entry Brief….COMPLETE
Describe the method for navigating to the entry point (usually a direct entry or plan for holding to enter on time), radial and DME and/or visual description of the entry point (if you are visual the entry point, make sure to "walk" the pilot's eyes onto it), and entry altitude and heading (provide airspeed when at entry altitude). At the end of this brief provide the ERAA and the plan if there is a need to abort the route

Altimeter….CHECK
Ensure the proper altimeter setting is set on both primary and standby altimeters. Use the latest altimeter setting. For local flights this will usually be Mobile Approach's altimeter setting as Anniston Radio's may be older.

As an additional note, once you visually identify the entry point, set your TACAN to a NAVAID you will need on exit or a suitable divert field along the route.

204. ROUTE ENTRY

One of the first radio calls specific to low-level VFR flight is cancellation of IFR. IFR cancellation is not a request, but a statement to the controlling facility. To cancel IFR the aircraft must be VMC, clear of Class A airspace (Below FL180), and for local routes, when you are talking to Mobile Approach.

If IMC or visibility with the ground does not exist at altitude, the only option is to request a lower altitude. In this situation, request descent to "minimum vectoring altitude." The controlling agency will then clear the aircraft to the lowest altitude still enabling them to provide radar service (see example below). You may want to talk to the controlling agency on a Very-high Frequency (VHF) so you can make normal radio calls to the Flight Service Stations (FSS) on Ultra-high Frequency (UHF).

> *"Mobile Approach, BUCK725 request descent to (an MSL below the cloud layer)" <u>OR</u> "Minimum Vectoring Altitude."*

If VMC is still not attainable, expect to cancel the low-level portion and request IFR clearance to your destination or pick-up the "Alpha" portion of your flight plan for an instrument navigation (INAV) profile. After acknowledging instructions, provide the pilot navigation to the first point and direct a climb or descent to the assigned altitude. To do the back-up “Alpha” route the call would be:

"Mobile Approach, BUCK725, request pick-up of the Alpha portion of our flight plan."

If everything is progressing as planned, and not in Class A airspace and in VMC, coordinate your intentions with the pilot and cancel IFR with the appropriate facility:

"Mobile Approach, BUCK725, cancel IFR."

Upon canceling IFR, IMMEDIATELY take charge of the aircraft and focus on setting up for low-level route entry. Accomplish the following items of the HAT brief:

Give the pilot a Heading to fly.

Direct the pilot to an appropriate VFR Altitude.

Change Transponder squawk to 1200.

You will also change frequency to 255.4 or channel 17.

Approximately 5 minutes prior to low-level entry continue to the “Low Level” portion of the entry checklist. Compute your entry time (minutes after the hour) and contact the appropriate FSS. Keep in mind that per TW-6 low-level entry scheduling, aircraft will enter the low level within +/- 4 minutes of scheduled entry time. This call begins with a courtesy call including call sign, general location, and radio type:

"Anniston Radio, BUCK725, vicinity of Mobile, on uniform."

After approximately 10 to 20 seconds, the FSS will acknowledge:

"BUCK725, Anniston Radio, go ahead".

"BUCK725, single T-39N, entering Victor Romeo one zero two one (VR-1021)*, point A, time* _____ (minutes after the hour, only two characters), *exit point E, time* _____*. 500 feet, 300 KTS."*

FSS will acknowledge, give a local altimeter setting, and any applicable information about the route. After reading back the altimeter (do not update the altimeter because it is probably old information), leave the UHF radio tuned to FSS frequency (255.4) or in accordance with AP-1B directives. Unless briefed otherwise, expect the instructor to make subsequent radio calls on UHF (minus the exit call) and the pilot to make radio calls on VHF required by specific AP-1B instructions while in the low-level environment.

You must continue to navigate to within 3 NM of the entry until the pilot takes over. For this to happen, use clock code and good descriptive communication to get the pilot's eyes onto the entry point. Once he is visual with the entry point, he will get the aircraft aligned on heading, airspeed, altitude, you have provided to enter the route. Continue to clear outside and command a turn if it is on your side of the aircraft.

Once at entry altitude, complete the "Low Level" portion of the entry checks. Direct the pilot to accelerate to the computed indicated airspeed. For the T-39N, once reference the PCL to provide the correct indicated airspeed to fly based on temperature. As the pilot accelerates, change the aircraft transponder code to 4000, indicating an aircraft at high speed in a formal MTR. Finally, brief the crew on how and where the clock will be started. "MACH, SQUAWK, CLOCK" is a good way to remember the last three items of the checks.

205. SCANNING

Visual fixing in the T-39N is different from the T-6. While the same terrain and cultural features are available outside the aircraft, faster airspeeds, different altitudes, and a different cockpit configuration affect how visible features outside the aircraft appear.

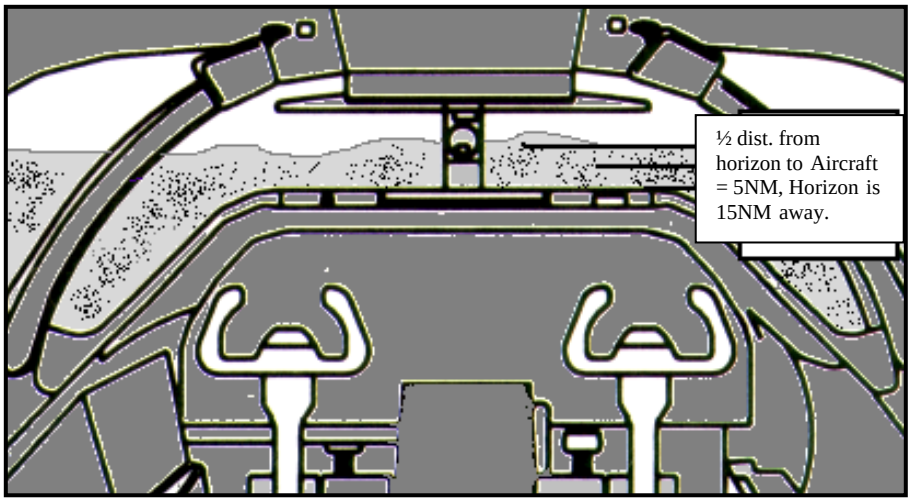

Figure 2-1 Visual Reference

Flying faster and lower than T-6 VNAVs, the total time a feature is visible is significantly less. At one minute prior to the turnpoint, T-6 aircraft are 2 1/2 NM from the feature. In T-39N flights, the point is still 5 miles away at one minute. As a result, making time updates is a critical factor in visual navigation**.** Your scan should be 2-3 minutes ahead of the aircraft. You should focus your eyes at the appropriate distance and then bring them to the approximate clock position of the feature you are looking for. This position may change based off of where you believe you are relative to preflight course and time. After a few moments, if you do not see what you are looking for, check your clock and widen your scan looking even further away from the original position.

You'll be amazed at what you can see by looking 2-3 minutes ahead (or even greater) of the aircraft. Sometimes you can even see your next turnpoint or the turnpoint environment as soon

as you roll wings level. For example, on VR-1020 point B is a bridge, which cannot be seen from the entry point, however the large power plant 4 NM directly behind can often be seen!

Throughout your training in the Intermediate and Advanced syllabi you will find the most beneficial pieces of information out there come in the form of vertical development. Vertical development is easy to see when it sticks above the horizon. This means you must scan for this information on the horizon when it is 2-3 minutes away. Waiting or starting to look for objects 30 seconds away is much more difficult because you are looking for it against the background of the terrain (looking almost straight down). An object 1 NM left of course will appear to be just left of the nose when it is 3 minutes away. At 1 minute away this same object will appear at the 11 o'clock position and when 30 seconds or abeam your scan will be around the 9:30 to 10 o'clock position. Notice the tower 1 NM left of course in Figure 2-2 at 3 minutes, 1 minute, 30 seconds. A tower is most easily seen when it sticks out above the horizon and is almost straight ahead at 3 minutes.

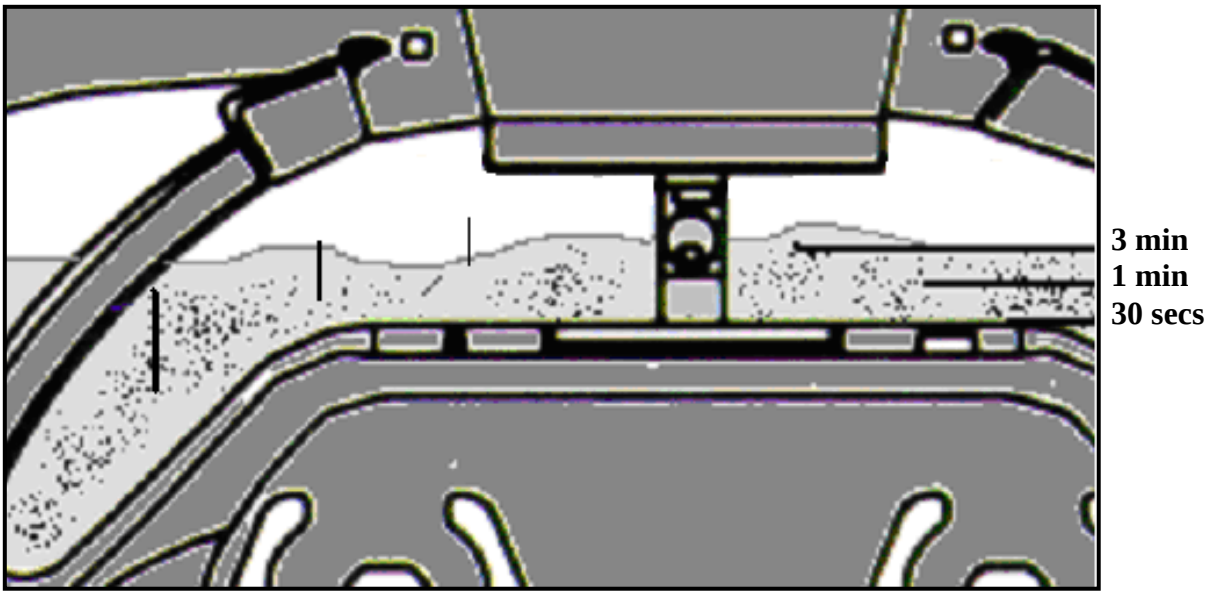

Figure 2-2 Visual Scan

Pick objects that will give you two important pieces of information: course and time. In this aircraft anything that is one wing tip distance away is considered to be 1 NM (at 500 feet AGL). Picking something as close to course as possible obviously is more beneficial than something far away. This means if you have a 500 foot tower 1 1/2 NM left of course and a 250 foot tower on course, you would get more accurate information from your 250 foot tower than the 500 foot tower. This does not mean you shouldn’t look for the 500 foot tower, but more accurate info comes from something closer to course than farther away.

It should be fairly obvious, when searching for a checkpoint, you want to pick something easy to find. Again, look for the vertical development first to include towers, fire towers, buildings, and significant terrain. Use CHUM towers with caution due to possible plotting errors. Additionally, the lower altitude typically decreases horizontal visual range as even gradual rises in terrain can obscure checkpoints. Trees will have a similar affect, as roads crossing

perpendicular to the planned route may not appear until a few seconds prior to crossover while parallel cuts in the trees may be readily obvious. Looking in the right place at the right time is a key factor, and can only be done through proper use of **CLOCK, CHART, GROUND** and with effective verbal timing updates.

Horizontal development is what you should use as a secondary means of course information. There are several good horizontal checkpoints on low-level routes, but there are also some ambiguous ones as well. Things such as primary roads, dual lane highways, and interstates are fairly reliable pieces of information. Power lines, single line rivers, secondary roads, and underground pipelines are fairly common and may not be totally reliable. Power lines, for example, could have recently been erected which are not always on the charts. Single line rivers, creeks, etc., may have overflowed or dried up in some cases and may not give you accurate information. A primary road running perpendicular to course may be a good checkpoint for time, but not for course (however, look for indicators of course on that road such as an overpass or rest area). A highway running parallel to course may be a good checkpoint for course, but not for time. A diagonal road provides neither good course nor time information. Choose wisely!

Consider looking at angles when planning a route. At 500 feet AGL, will you be able to identify an intermediate checkpoint 3 NM to the right of course? Probably not because of forest and other vegetation around the local area. Parallel cuts in the forest close to course may be easily identifiable, whereas a perpendicular highway may not break out until right upon it. Water is usually at the lowest point in terrain elevation, changes its shape depending on seasons and rainfall, and has vegetation around it. Remember, that even though you may be looking for a tower that is three miles right of course, do not discount the 500 foot wide river that you are flying over. A wide river like this can still provide a lot of clues if you are on course or on time because of its prominence. Again, weigh the good and the bad when selecting checkpoints.

When looking at circle towns, look at what is around the area to get a feel of how the town will show up. Lines of communication are a good indicator of development of any city. For example, find out if there are primary roads or secondary roads around the town. Look to see if there are railroads in town. Determine their proximity to a major town or magenta area. These are significant in determining how well you will be able to acquire your circle town. Key things to keep in mind:

1. Annotate all checkpoints by labeling time to the nearest second. Also, write down how far left or right of course the checkpoints is (if not on course).

2. Do not select anything inside of the turnpoint circle.

3. You may use anything you want, but be prepared to defend your selection.

Is there a recommended amount of checkpoints on each leg? No, but during the Intermediate phase you may have 8 minute legs. Not having anything annotated for 5+ minutes is NOT a good idea. Strive to have an intermediate checkpoint every 3-4 minutes because if you miss one during that leg, in another four minutes, there will be another checkpoint that you can use to get back on course and on time. See Section 215 for further discussion on incorporating intermediate checkpoints.

2-8 T-39N LOW-LEVEL IN-FLIGHT PROCEDURES

206. CREW COORDINATION

Crew coordination is an essential skill for any mission. Especially in the low-level environment, communication needs to be clear and concise. For this reason, please take note of the following: HEADINGS are given as three single digits. For example, a heading of 295 is simply stated *"two -nine-five"*. Do not preface a heading with the word "to". *"Turn to two-five-five"* could make the pilot ask if the heading you want is 225 instead of 255.

AIRSPEEDS are given as "one" number. For example, a speed of 295 is said *"two-ninety-five"*.

Additionally, there is no rank in the aircraft so stop calling the pilot or instructor "sir". Do NOT preface every statement you make in the jet with the phrase "sir". More importantly, do NOT point! It's not polite and will not help you in a Tornado or F-15E when you are sitting in the back seat and the pilot is unable to see where you are pointing. Instead, use good descriptive communication and clock codes. One example would be:

> *"The road bridge and river is at 2 o'clock, half way to the horizon."*

207. TURNPOINT PROCEDURES

Fundamentals in aviation are incorporated through procedures. Procedures are how we accomplish task in accordance with regulations, directives, and command philosophy. The purpose of turnpoint procedures (TPPs) is to increase Situational Awareness (SA), not student harassment. Each step in the procedures is there to build SA as to what is happening with the aircraft and provide you with a framework of determining what you must do next. Discussing such items as fuel, warning of hazards, and preparing for course changes enhances crew SA.

As taught since most basic flight training aircraft priorities are aviate, navigate, communicate. Added to this list could be briefs which include TPPs. If TPPs are not quick, accurate, and thorough, then the higher cockpit priorities of aviate, navigate, and communicate will definitely suffer. Simply put, without smooth procedures, adequate time will not be spent on the radarscope or visual scan. However, well executed procedures will enable you to go heads-up quickly to the radarscope or to your low-level visual scan with good navigation SA built on solid analysis of what happened on the previous legs.

2 Minute Prior Call	Outbound heading Outbound airspeed Outbound altitude (silent if unchanged) Turnpoint description & Hazards
Mark-On-Top Call	Clear Turn Turn Time Set airspeed Clear turn
Wings Level Call	Heading Airspeed Altitude Fuel Turnpoint analysis Time analysis Update ETA Wind Consideration Check Crab Check Airspeed

Figure 2-3 Turnpoint Procedures

208. TWO MINUTE PRIOR CALL

The Two Minute Prior (TMP) Call is meant to provide SA to the pilot by alerting him as to what the outbound heading, airspeed, and altitude is as well as giving a turnpoint description and hazard briefs in a low-level environment. Knowing preflight course and base airspeed, we can apply the winds (preflight or calculated) to produce a good TMP Call. In the low-level environment, give the TMP Call when the clock indicates two minutes to go before your latest updated ETA (Estimated Time of Arrival). Wind application, therefore, must be done before this point. If the TMP Call is late, state the more accurate time to go (i.e., *"One minute prior to point B..."*). Once the TMP Call has been given, all of your effort should be focused on locating your upcoming turnpoint or target since you just briefed it. DON'T STARE AT YOUR CHART!

The following are sample TMP Calls:

"Two minutes prior to Bravo."
"Outbound heading two-six-seven,"
"Airspeed two-ninety-five."
"The turn point is an overpass over a divided highway running left to right."

In the above example, a turnpoint description was given which adequately describes the turnpoint without being excessively wordy. This is the essence of giving a turnpoint description

-- you need it to be descriptive enough so the pilot knows what to look for, but not so long that it takes away from your time to scan outside. As a side note, chairfly how you are going to describe each turnpoint or hazard. Any time there is a hazard at the turnpoint or in the turn, or if there is something a bit out of the ordinary at the turnpoint (such as this noise sensitive area), it makes good sense to call for it in the TMP call.

"Two minutes prior to Delta"
"Outbound heading three-two-five"
"Airspeed three-hundred"
"Point/Target is a road bridge. There is a four-hundred foot tower just past the point."

NOTE

You need to clear the turn PRIOR to getting there, clearing is an aviate/safety procedure (the ultimate priority). In addition, you will verbalize "clear right" anytime the aircraft changes heading more than 30°.

209. MARK-ON-TOP CALL

The primary purpose of the Mark-On-Top (MOT) Call is to get the jet moving in the intended direction. The second purpose is to accurately determine when you were there.

At the entry point of the route, getting the clock started is of primary concern. With this exception, at all other points on the route the action of turning the aircraft to the outbound heading is the absolute top priority when on top the turnpoint. Obviously, "when are you on top?" is an important question as well. After calling for the turn, read the aircraft digital clock and record the Actual Time of Arrival (ATA). Then finish the rest of the MOT Call.

MOT Call for Entry Point Only:

"Ready…, Ready…, Hack! Right one-seven-six. Clock is started. Set two-ninety-five. ".

MOT Call for all other points on Low Level:

"Clear right, right three-two-five"
"Time is twenty-four plus forty-seven"
"Set three-hundred"
Continue clearing the turn!!!

In the above example, we can discuss several important facts concerning the specified format. As you can see, turning the aircraft is accomplished as simply and succinctly as possible. DO NOT embellish the turn command with phrases such *as "Come right to..."* or *"Turn left to…"* For example, if you give a command such as *"Come left to two-three-eight",* the pilot is very likely to mistake the word "to" for the number "two" and steady up on 223 instead of 238. Furthermore, excessively wordy commands are clumsy and not tactical. *"Right one-seven-five"* accomplishes your intentions much quicker than *"Sir, uhh come right to a uhh heading of about, uhh…, one-seven-five".*

Establishing a consistent rhythm for your MOT Call is critical to accurate performance. After commanding the turn, immediately read the clock aloud and quickly write down the ATA on your chart. Next, be sure to have the pilot set the wind compensated airspeed. The accuracy of your wind analysis is directly related to the accuracy of your MOT. Do not hesitate getting a quick ATA, for a delay of as little as 5 seconds can result in the creation of 5 or 10 knots of nonexistent wind. Subsequent ETA updates will be inaccurate, thus further confusing the wind issue. Since the ATA will play a major role in the Wings Level Call (WLC), record it in the same fashion every leg and circle or put a check next to it so you can quickly locate it for future computations.

NOTE

> Minimal time should be spent eyes inside the cockpit writing on your kneeboard or chart, as the higher priority is to clear the turn.

In a low-level visual environment, on top is when the turnpoint or target passes under the belly of the aircraft. When this actually occurs can be easily determined if you look at either side of the actual turnpoint and find a reference point abeam the actual turnpoint. If you use a reference point, get the jet pointed at the actual turnpoint and then, as the turnpoint passes out of sight under the nose, look towards the reference point. On top should be called as the reference point passes alongside your shoulder or “down your rank”. This technique is used most often when there is a major road next to a turnpoint, or when crossing a bridge. It can also be used for marking in the center of a small town as well. When passing over an isolated structure, determining the exact time can be trickier, but look close, you may find a good reference point or line in the form of a fence, field, or line of trees.

Remember, clearing the turn is a safety of flight procedure, it requires an intense scan outside the cockpit. The low-level environment is the most hazardous and unforgiving place to fly. The reason we want you to look outside is so that dangers can be avoided before they become a causal factor in a mishap report. Please believe the instructors when they say there are countless examples of dead aviators who have been fixated on items inside the cockpit when they should have looked outside.

210. WINGS LEVEL CALL

A good Wings Level Call will flow like this:

> *"Three-two-five"*
> *"Three-hundred"*
> *"Seven-hundred-fifty should be five-hundred"*
> *"Five-thousand-three-hundred pounds, two-hundred above MCF, positive trend.”*
> *"I was one mile left of course, making me half mile left of course now and an additional four seconds early to Charlie, RIGHT three-five-five time in thirty, time out forty."*
> *"Eight seconds early."*
> *"Updated ETA thirty-one plus sixteen" or "Set two-hundred, time in ____time out____"*
> *“Winds pushed me one mile left and four seconds early on my previous leg so my updated winds are from _____ at _____ KTS. New heading three-two- six, set two-ninety.”*

The first four items of the WLC are an aviate priority. Certainly, if the pilot is off the heading, airspeed, or altitude assigned from the TMP and MOT calls your primary thoughts must be toward safety of flight. In addition, you need to verify that the pilot is flying what you have told him to. Likewise, if there is insufficient fuel to complete the mission and return to base (RTB) safely, you have a much bigger problem than wind calculations. Because of their importance, double-check the pilot on the first three items and check the fuel. DO NOT start the WLC before actually rolling wings level.

Read your instruments starting with the heading on the HSI (Horizontal Situation Indicator). If the instrument does not agree with what you requested, direct the pilot to correct the discrepancy. It is your responsibility to backup the pilot with correct heading, airspeed, and altitude. The pilot is not deliberately trying to lead you astray, he simply may have misunderstood you. Be directive and tell the pilot to get back on your desired heading, airspeed, and/or altitude.

For altitude, read the radar altimeter for AGL altitude in the low-level environment. When flying at 500 feet AGL, direct the pilot to climb to 500 feet at anytime if the radar altimeter reads 450 feet or less (DH bug should be set at 90% of desired altitude). Direct the pilot to descend if he exceeds 600 feet. Keep in mind that in rolling terrain, pilots will fly an average or approximate 500 to 600 feet RADALT reading in order to avoid yanking the jet up and down each bump in the terrain to maintain a steady 500 feet AGL. So, when in rolling terrain or crossing a ridgeline, be a little more flexible on the upper limits. Anytime the aircraft is observed below what is set in the DH (an illuminated DH light next to the RADALT) you should immediately command “CLIMB” and the pilot should respond “CLIMBING” and you should observe the aircraft climbing.

Fuel consists of three elements: reading the actual fuel on board the aircraft correctly, stating the amount above/below MCF, and finally noting whether you have a positive or negative trend. You must utilize judgment here, if you are above MCF then obviously you will continue, there is no need to verbalize a recommendation to continue. If you note a negative trend however, you should monitor closely and make recommendations to adjust your plan if necessary (exit the route early, change routing, change alternates, etc.).

Turnpoint Analysis

Turnpoint analysis deals with both what happened over the last leg as well as where the aircraft is now. It includes analysis of where you marked in relation to your turnpoint, turnpoint geometry, and how that relationship affects the outbound course and ETA to the next turnpoint. Throughout your analysis, keep in the back of your mind how the winds play a role. Wind consideration will be discussed in depth shortly.

Obviously, what we are aiming for is an aggressive effort to MOT of your turnpoint or target. That being said, sometimes you may not MOT of a turnpoint on the proper heading. Any time you do not MOT on heading, you introduce some errors in distance off course and timing that must be properly accounted for.

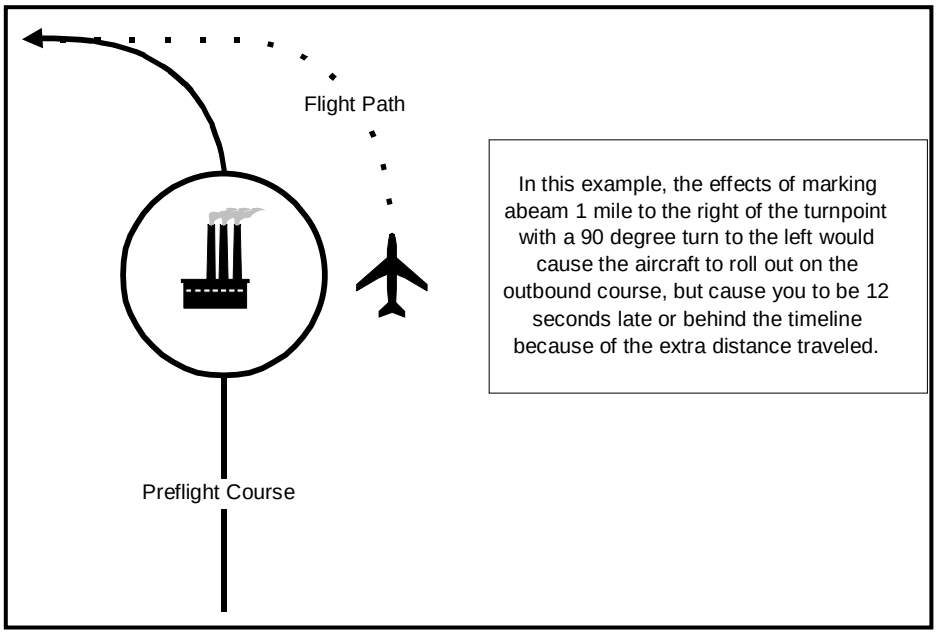

Figure 2-4 Turnpoint Geometry

To illustrate the effects of turnpoint geometry, look at the example in Figure 2-4. Say you were inbound to a factory, and you saw it at the last minute one mile to your left, abeam. The turn out of this turnpoint is a 90° left turn. Your turnpoint analysis during your WLC should sound like this:

"We are on course."

You may ask yourself, "How do I combine time information with arriving earlier or later than my preflight ETA?" You will combine the errors in timing in the next step. But for now, the big issue for the turnpoint analysis step is "Am I on the course line or off of it?"

For accountability and future reference, if you mark at the turnpoint on anything other than "on top, on heading", you should record exactly where you turned in relation to the turnpoint. The safest and best opportunity to mark your chart is after rolling wings level. This can be done easily with just a quick line drawn on the chart. If you did not know where you were and you turned on time, then your turnpoint analysis should simply be "Turnpoint analysis -- I turned on my updated ETA." Keep in mind that the more aggressive you are in locating your turnpoint and making the necessary corrections before you MOT, the easier your turnpoint analysis is on the outbound leg.

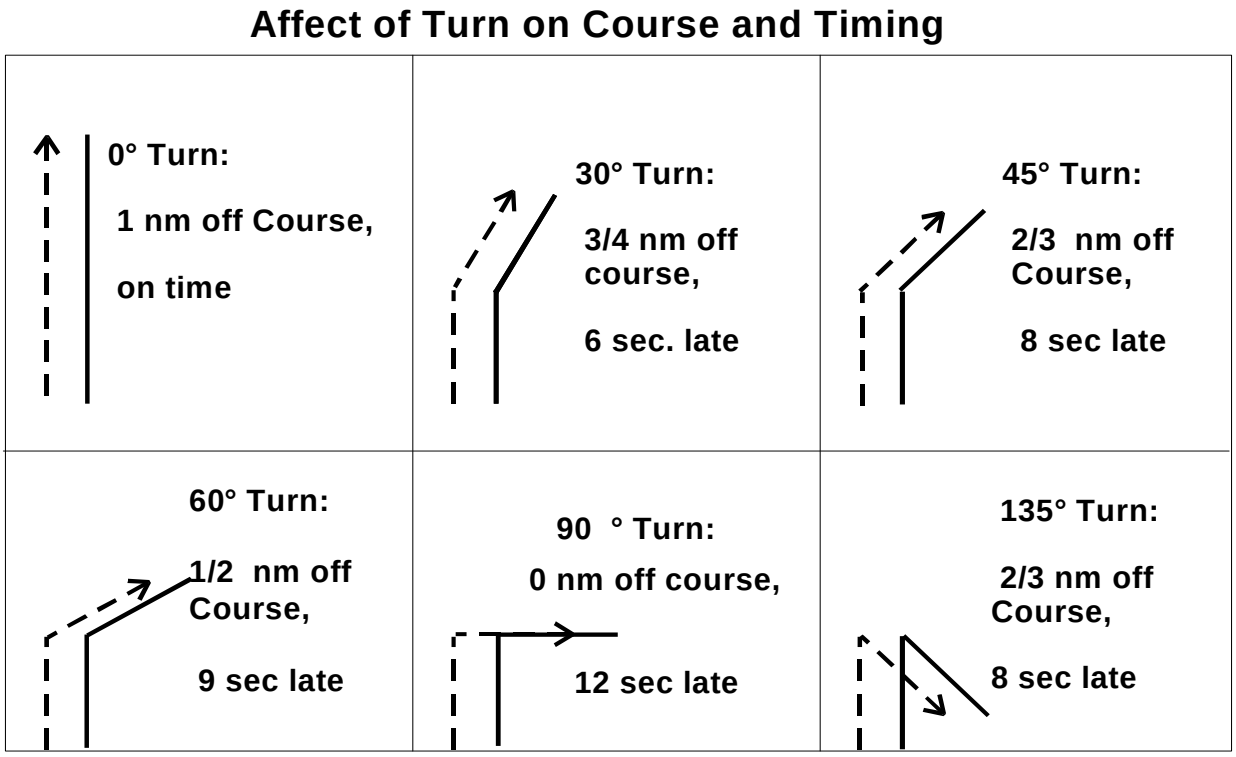

Initial conditions: On time, 1nm left of course. Dashed line represents aircraft actual flight path.

Figure 2-5 Turnpoint Geometry

Time Analysis and Updating ETA

During time analysis, you will sum up the errors that affect the timing problem. Just like with turnpoint analysis, keep in mind how the winds might be affecting you. This will be discussed in the next section. If the combined errors are 12 seconds or greater prior to the target leg, you must initiate a speed correction to get back on the preflight timeline. Ideally, you should have an idea if you are going to be significantly early or late (greater than 12 seconds) before you MOT of each turnpoint. If so, you will be ahead of the aircraft and ready to put in your speed correction on top, and this should be mentioned in the TMP Call. With less than 12 seconds of total error, you can simply update the ETA to the next point, unless you're on the target leg.

What do we mean by "combined errors" in the timing problem? Recall in the previous step, turnpoint analysis, we examined the errors caused by marking in a situation other than on top, on heading. In this step, we account for the time difference and add it to any differences in marking on top of our preflight ETA. Mathematically, we could express this as…combined timing errors = time errors from turnpoint analysis + time errors from MOT.

Let's look at the example given in the turnpoint analysis section where we marked 1 mile abeam on heading with a 90° turn. This would make us 12 seconds late. But, let us say that when we saw the turnpoint, we were 18 seconds earlier than the preflight time. If we combine the two: Combined timing errors = 12 sec late + 18 sec early = 6 seconds early.

We would update the ETA at the next point by subtracting 6 seconds from the preflight ETA. Because we have only 6 seconds difference from the preflight timeline, there is no need to perform a speed correction.

One of the main stumbling blocks on this step involves record keeping in relation to timing. Students are encouraged to write on their chart in an effort to minimize cockpit clutter. You need to maintain a system of noting times enabling you to quickly access the numbers and clearly understand the differences between "early" and "late". When the aircraft is early it may or may not be fast, likewise just because you are late does not mean the aircraft is slow, because you could be flying 310 KTS. It just means that you are early or late compared to where we have to be so you may have to adjust your airspeed because of winds, air temperature, and if we are off by more than 12 seconds, then you will need to implement a speed correction.

Some students use a plus or minus sign to indicate late or early, while some use an “up” or “down” arrow. A great method is to write the ATA either above or below the ETA based on if you were late or early. If you were late, you would write the time above the ETA because this time is “greater” or if you were early write the time below because this is “lesser” than the ETA. This will also provide a visual representation for speed corrections or compensations. If the number is above, you need to push the throttles up, if it’s below, pull the throttles back. Whatever the method used, find something that works for you and practice using it before the flight.

At this point, ensure you have an accurate updated ETA based on the turnpoint and time analysis. Again, if this time is 12 seconds or more off preflight, a speed correction is required. If there are no updates to preflight ETA, you must still state what time you expect to arrive at the next turnpoint. For example, outbound from Point 1 there is normally no update change. So, to update ETA sounds like this: *"Updated ETA to Point C is 16 plus 24."* With an accurate ETA calculated, you can move on to wind consideration.

Wind Consideration

You will be faced with three interrelated tasks involving winds: wind analysis, wind consideration, and wind application. Wind analysis is the determination of winds based on mathematical processes with accurate equipment (a radar or Doppler) to measure the affects. Wind consideration is the process of interpreting outside visual clues indicating wind direction and speed during visual navigation. Wind application is the compensation applied to the heading and airspeed of the aircraft to maintain a desired track and groundspeed. Because these steps present students with the biggest stumbling blocks during procedures, we will closely examine these three topics. Before we do this, however, let's look at a step-by-step approach to solving the wind problem. In order to do the wind consideration the same for each leg and establish a habit pattern, the following steps should be used:

1. Calculate Apparent Head/Tailwind (formula)

2. Compare to Corrected Head/Tailwind

3. Combine for True Head/Tailwind

4. Determine True Crosswind (drift analysis or formula)

5. Combine 3 & 4 for Total True wind

Before we can discuss the particulars of the above method, we need to review some terminology. Note there are three types of "wind": Apparent, Corrected, and True. The wind that is really there is the True wind. The Corrected wind is the wind components we corrected for by crab and indicated airspeed to maintain 300 knots groundspeed and course on each leg. The Apparent wind is indirectly determined by measuring the effectiveness of the Corrected wind at maintaining preflight course and time. With these terms in mind, we can now discuss wind analysis in detail.

Crosswind Computation

The basic crosswind formula does not include any reference to air or groundspeed.

$$\frac{\text{Distance off course (NM)}}{\text{Approx. time flown (min)}} x \frac{60 \text{ min}}{\text{hr}} = \text{Crosswind (KTS)}$$

For the above equation, note that both "Distance off course (NM)" and "approximate time flown (min)" are with respect to the last fix. Also, because this equation is independent of ground or air speed, it works for T-6s, T-39Ns, and T-45s as well as F-15s, B-1s, and F-18s. Crosswind is simply the velocity at which the aircraft is traveling to the left or right of course. What if the "approximate time flown (min)" is equal to 6 minutes? Then the equation becomes:

Distance off course X 10 = Crosswind (KTS) :(6 minutes)

For 4 and 5 minutes, the equations become:

Distance off course X 15 = Crosswind (KTS) :(4 minutes)
Distance off course X 12 = Crosswind (KTS) :(5 minutes)

Additionally, if you have a crab holding you steady on course, the true crosswind is the number of degrees multiplied by 5 knots.

Apparent head or tailwinds can be determined by the "5 minute rule". This rule states that for analyzing speeds of 300 knots…

$$\frac{\text{Time gained / lost (in seconds)}}{\text{Leg time (in minutes)}} x\ 5 = \text{Apparent headwind or tailwind}$$

It is important to note that the number of seconds gained or lost is from the comparison of the updated ETA with the MOT time. Let's look at the following example.

Problem: Preflight time at Point B is 5+30. Preflight time at Point C is 10+30. The course change at Point B is only a couple of degrees. You MOT of Point B, 10 seconds early. Since you do not have to correct for a difference of less than 12 seconds between MOT and preflight time, you update the ETA at Point C to 10+20. Because you are lazy, you do not do any wind calculations or compensation. You get to Point C and MOT at time 10+40. Assuming no other variable is acting upon your aircraft, what is the headwind/tailwind component?

Solution: Since the leg between Points B and C is 5 minutes long, this makes the calculation easy. Remember, for a 5 minute leg, the number of seconds gained or lost = the headwind or tailwind. Note that we use the difference between the updated ETA and the actual MOT to determine the time gained or lost. In this case, it is 10+20 - 10+40, which means 20 seconds were lost, therefore indicating a 20-knot headwind.

Once the wind components are derived, they can be combined together into a total wind (or the total wind broken into components) using several different methods.

Head or Tail Wind Computation

$$\frac{\text{Time gained or lost (sec)}}{\text{Approx. time flown (min) since last compensation update}} \times \underbrace{\frac{\text{NM}}{\text{sec}}}_{\text{Planned Aircraft Speed (NM/sec)}} \times \underbrace{\frac{60\,\text{min}}{\text{hr}}}_{\text{Convert to NM/hr}} = \text{Head/Tailwind (KTS)}$$

In the above equation, planned airspeed is a factor and changes the equation depending on which aircraft is being flown. Reducing terms and applying airspeed of 300 KTS, the equation becomes:

$$\frac{\text{Time gained or lost (sec)}}{\text{Approx. time flown (min) since last compensation update}} \times \frac{1\,\text{NM}}{15\,\text{sec}} \times \frac{60\,\text{min}}{\text{hr}} = \text{Head/Tailwind (KTS)}$$

Or:

$$\frac{\text{Time gained or lost (sec)}}{\text{Approx. time flown (min) since last compensation update}} \times \frac{5\text{NM.min}}{\text{sec.}hr} = \text{Head/Tailwind (KTS)}$$

For a time interval of 5 minutes, this equation becomes:

Time gained or lost (sec) = Head/Tailwind (KTS)

As with crosswind computations, the "5 minute rule" may be used with time intervals between 4 and 6 minutes. Additionally, this equation could be used to compute crosswind components, by

first computing the distance off to seconds. As a final note on head and tail wind computations, note the Head/Tail wind component equation for any aircraft is basically:

$$\frac{\text{Time gained or lost (sec)}}{\text{Approx. time flown (min) since last compensation update}} \quad \text{X} \quad \frac{\text{NM}}{\text{min}} = \text{Head/Tailwind (KTS)}$$

As a result, whenever the approximate time flown in minutes is equal to the airspeed of the aircraft in nautical miles per minute, the head or tailwind is equal to the number of seconds off of updated time. With this in mind, the Head/Tailwind equation can easily be used with any aircraft at any airspeed.

With the basic components derived, determine the total wind by using the wind application method discussed later. An alternate, though less accurate, method is to compute the wind magnitude by adding half of the smaller component to the larger component. Grading standards are $\pm$30º and $\pm$10 KTS. As the TMP Call requires total wind computation to determine outbound heading and airspeed, students must be fluent in these computations. Be careful of the common error of mistaking the wind direction by 180°, which effectively doubles the wind's effect on low-level navigation.

Using the “5 minute rule” learned in T-6, for time intervals between 4 and 6 minutes, the "5 Minute rule” or equation may be used. However, from the equations above we see that for time intervals closer to 6 minutes we should round down (or multiply by 10 rather than 12) and for time intervals closer to 4 minutes, rounding up is more accurate (or multiplying by 15 rather than 12).

Example: After three minutes of flight, a fix reveals the aircraft is 1/2 NM left of course. What is the crosswind? In this case, by doubling both the error and time interval we have 1 NM of error over 6 minutes of time. Using the equations previously described, this equates to 10 KTS of crosswind.

Example: After ten minutes of flight, a fix reveals the aircraft is 1 NM left of course. What is the crosswind? In this case, by halving both the error and time interval we have 1/2 NM of error over 5 minutes of time. Using the equations previously described, this equates to 10 KTS of crosswind.

Technically speaking, on low-level flights, instead of wind analysis, we do a "wind consideration". This is a concerted effort to minimize your heads down time crunching numbers while in the fast-paced, visual navigation environment. For wind consideration, you are expected to make minor azimuth and speed adjustments to the preflight wind to account for what occurs on each leg. Trend analysis takes on a greater meaning in the visual navigation environment. An effective method for determining winds is to visually identify it. By scanning a reference point on the horizon, drift can be identified by watching for movement in relation to the reference point. Another visual cue is smoke; however from 500 feet AGL smoke is only two-dimensional. Smoke that appears to be straight vertical could be blown towards or away

from you. There are numerous other visual clues such as looking at lakes and ponds. The wind will cause the water to ripple downwind and appear glossy where the water is protected by the trees. The sea state (watching for waves and whitecaps), looking at trees for discoloration of the leaves on the upwind side (the bottom of leaves is usually a lighter color than the tops).

There are three wind application methods that can be used when figuring out the winds. They are the ratio, wind cross, and HSI methods.

Ratio Method

This method relies on the memorization of certain ratios and how they apply to winds. As with any memorized formula, it gets easier with repeated use.

In-flight Usage:

Figure out the number of degrees winds are from the course (round out to the nearest 10 degrees) Divide velocity by five to help determine ratios:

Use the ratio formulas

10° = 5 to 1

20° = 3 to 1

30° = 2 to 1

40° = 3 to 2

45° = 1 to 1

As a check, all of bigger component + 1/2 of smaller = total velocity

Wind Cross Method

A major advantage of this method is that it provides a visual aid allowing for quick orientation of the wind vector along the course leg. This provides a "sanity check" to prevent confusion between head and tail winds and right and left crosswinds. Wind crosses may be placed along each leg of the VR routes.

Preflight Preparation:

Draw wind crosses after doghouses have been laid out to minimize space conflicts.
A wind cross consists of a large "+" sign with one axis parallel to the route leg.
Label each branch of the cross with the heading rounded off to the nearest 10°. For example, a leg with a preflight course of 327° magnetic would result in a wind cross with cardinal headings rounded to the nearest 10° of 330, 060, 150, and 300.

In-flight Usage:

How do I convert total wind to individual components? To be able to do this, we assume a solution has been achieved previously, an outside indication (smoke or waves) has been seen or preflight winds are being used. Referencing figure 2-6, first, draw in wind vector to represent direction and speed. Next, visualize where the extended components intersect headwind/tailwind and crosswind axis. Lastly, estimate speeds.

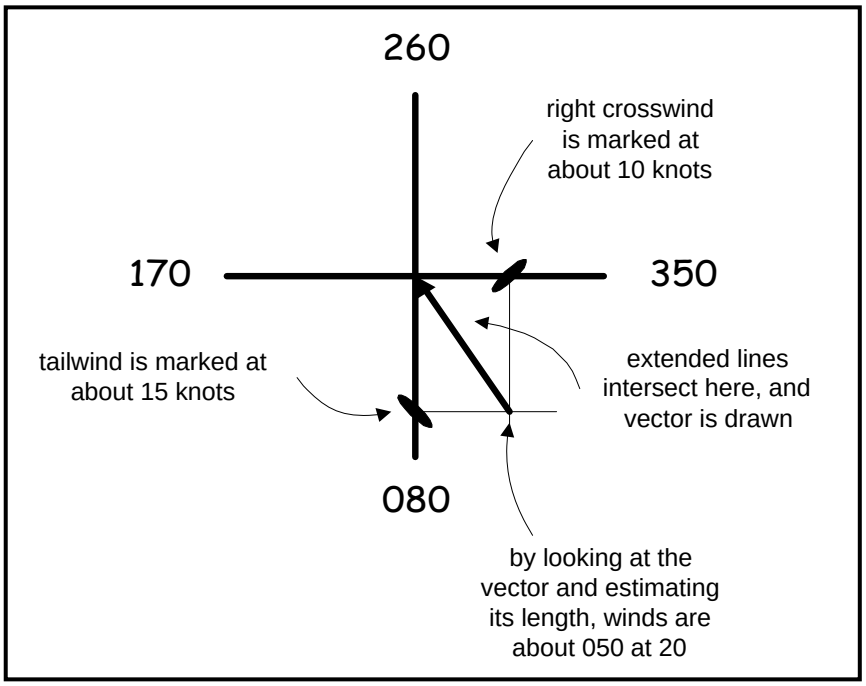

Figure 2-6 Components of Total Wind

How do I convert individual components to total wind? In order to do this, you must first determine the individual head/tailwind and right/left crosswind components. Also referencing figure 2-6, first, mark crosswind axis at rough determination of speed. Next, mark headwind/tailwind axis at rough determination of speed. Then, extend components until they intersect. Finally, draw a vector from intersection of components to center of cross and estimate direction and speed of total vector.

HSI Method

Arguably the easiest method to apply winds is the HSI method. You will find yourself using the HSI more and more as one of the keys to navigational situational awareness, and eventually come to use this as your sole method of analyzing winds in your operational aircraft. This is because it is simple, requires no paper, pens, note taking, and relies on a minimum of preflight preparation. However, it does rely on a good visualization of the concepts discussed in using the wind cross or ratio method. For this reason, it will take time and practice to master.

In-flight Usage:

First, set the heading bug (captain's bars) to indicate wind direction. Next, set the CDI (Course Deviation Indicator) bar to your current heading or outbound heading. Lastly, visualize wind velocity, breaking the velocity into components, and then finally compensate for the wind. To help visualize magnitude, one additional HSI method is to use the "Diamonds" on the CDI bar to visualize magnitude of components.

Using your HSI in such a manner presents additional advantages besides providing a paper and pen free way of analyzing winds. By dialing in your course in the CDI bar, it provides you with a quick reference of your heading, which ensures you are going in the correct direction after rolling wings level. The course information can be quickly referenced in the process of doing a BDHI. However, if you forget to update the CDI on a particular leg the results could be disastrous. An additional benefit is that if you have used visual cues to determine winds, the bug provides a quick way to note this. Lastly, the bug will stay there with each turn and this allows a quick check to see if compensations are being made in the correct direction.

Check Crab/Check Airspeed

Having completed the wind consideration portion of the WL Call, you must apply the appropriate compensations for heading and airspeed for those derived winds.

For minor heading changes (less than 10 degrees), you can simply state:

> "*New heading* _____" instead of "*clear right, right/left* _____"

In addition to routine airspeed compensations, if you have initiated a speed correction during your time analysis step, you must remember to adjust your correction by compensating for those winds. For example, you were 15 seconds late at your last turnpoint and initiated a speed correction from 295 to 325KTS. After your wind consideration, you realize that you have 10KTS of headwind, and immediately tell the pilot to "*set three-thirty-five*" to compensate.

Sample WL Call and Analysis

Having gone through all of the components of the WL Call, here is one more example of proper flow.

Example: After a 5+30 minute leg with a course of 265° and base airspeed of 295KTS, you mark on top of your turnpoint 1 mile left and 10 seconds late. Your outbound heading is a 60° right turn. What would a good WL Call sound like?

> "*Three-two-five*"
> "*Two-ninety-five*"
> "*Five-hundred*"
> "*Fifty-two-hundred pounds, four-hundred above MCF, positive trend*"
> "*I was one mile left and turned sixty degrees right making me one half mile left of course.*

Clear right, right three-five-five. Time in ten, time out twenty."
"I was ten seconds late and after the turn I am now an additional nine seconds for a total of nineteen seconds late. Set three-twenty-five, time in six plus forty, time out nine plus ten."
[Update ETA not required due to speed correction – skip this step]
"I was one mile left over five and a half minutes, equaling ten knots of right crosswind and I was ten seconds late equaling ten knots of headwind. So winds are from three-zero-zero at fifteen."
"New heading three-two-four."
"Set three-thirty-five."

211. SPEED CORRECTIONS

A 10 % speed correction is a 30 knot adjustment of the wind corrected speed used to correct an aircraft back to the timeline. If you are late, you need to speed up. If you are early, you need to slow down. This sounds simple and it is, as we do this every day when we drive to an appointment or a briefing. Most of us have some traffic light or landmark we pass by on the way to work that we use to judge our timing. When we pass that light, we look at our watches or the clock in the car and make a quick estimate if we are early or late, then adjust our speed accordingly. It is the same process in the jet. We look at a checkpoint along our route or check the time at our turnpoint and, if we are off our timeline, we make an adjustment.

We know how long to leave in a speed correction because every 10 seconds of a speed correction corrects for 1 second (that is why it's called the 10% method). For instance, if we were off preflight time by 12 seconds, we would leave the speed correction in for 2 minutes/120 seconds. If we were off by 18 seconds, the speed correction would remain in for 3 minutes. If we were off a preflight by 15 seconds, we would leave the speed correction in for 2 minutes and 30 seconds.

There are a few rules concerning speed corrections. Before we go into the actual "how's" and "why's" of speed corrections, let's review these basic rules.

1. A speed correction must be made when there is a 12 second or greater difference between the MOT time or intermediate checkpoint time and the preflight ETA.

2. Speed corrections are made in 30 knot adjustments to the wind corrected airspeed.

3. On the target leg only, a "double-up" speed correction (50 KTS) may be made, however you can still only speed up to 350 KTS maximum or slow down to 250 KTS minimum.

4. On the target leg only, a speed correction may be made when less than 12 seconds off.

5. On low-level visual routes, speed corrections may be made based on differences between on top times and preflight ETA's at intermediate checkpoints.

First, let's evaluate rules 1 and 2. A speed correction is required anytime there is 12 seconds or more difference between the actual MOT time and the preflight ETA. The key item here is the

difference between the MOT and the preflight ETA, NOT an updated ETA. Remember that differences in MOT time and updated ETA are used for wind analysis with speed corrections, we are interested in getting back on our timeline, and that is what you wrote on the chart when you prepared the route.

As the second rule states, a speed correction is a 30 knot change to the wind corrected airspeed. For example, suppose your base airspeed was 300, and you have 15 knots of headwind on the outbound leg. When you MOT, you immediately realize you are late, and throw in a speed correction. Now, if you say *"Set three-thirty"* you have just set yourself up for frustration, because you have not first compensated for the 15 knot headwind and then corrected using the 30 knot speed correction. At this rate, you will never make any progress back to your timeline. A way to look at a speed correction is by the formula.

CORRECTED AIRSPEED = BASE + (WIND COMP) + (S CORR)

Where:

BASE = Base airspeed is 300KTAS
WIND COMP = Wind compensation for tailwind or headwind
S CORR = Speed correction

In the previous example, with a base airspeed of 300, 15 knots of headwind, and a +30 knot speed correction, we plug in the values to the above equation to get.

CORRECTED AIRSPEED = 300 + (+15) + (+30)
CORRECTED AIRSPEED = <u>345 KIAS</u>

Realizing this, you immediately tell the pilot *"set three-forty-five"* and save the day! Note the values for wind compensation can be expressed as a positive value, in the case of a headwind, a negative value, or in the case of a tailwind. Similarly, speed corrections could either be a positive, as you have to increase speed when you are late or a negative, as you must decrease speed when you are early. Not considering how wind compensation and speed corrections should be combined is a common pitfall for students.

212. HOW TO DO A SPEED CORRECTION

Doing a speed correction is easy, just add or subtract 30 knots, right? Well, it is actually a bit more complicated, because we must determine when we can take a correction out. The easiest way to approach this problem is to take apart the problem in chunks, first solving for the speed you need to set, then solving for the time it needs to come out. Let's look at the following:

Example: You arrive at Point C at 18+36; your preflight time was 18+18. Base airspeed is 295. You have 15 knots of headwind on this leg. What is your speed correction, and when do you take it out? You are late, so you need to speed up 30 knots. Using the equation mentioned previously, we add 295 + 15 + 30 = 340. Speed should be set to 340. Assume we realize we are late as we MOT and immediately put the speed correction in at 18+36. Preflight time was

18+18, we got there at 18+36, and so we are 18 seconds late. Since a minute of speed correction corrects for 6 seconds, the speed correction needs to stay in for 3 minutes. If time in was 18+36, the time for the correction to come out will be 21+36.

Example: You arrive at Point D at 21+45; your preflight time was 22+06. Base airspeed is 305. You have 10 knots of tailwind on this leg. What is your speed correction, and when do you take it out? You are early, so you need to slow down. Using our equation, we add 305 + (-10) + (-30) = 265. Speed should be set at 265. It takes us a minute to realize how late we are, and the speed correction does not go in until 23+10. Preflight time was 22+06, we got there at 21+45, and so we are 21 seconds early. Dividing 21 by 6, we get 3 with 3 remaining, so the speed correction needs to stay in for 3 minutes, 30 seconds. If time in was 23+10, the time for the speed correction to come out is 26+40. Just remember that the minimum airspeed for the T-39N on the low-level is 250 KIAS. If you want a speed less than 250, you will have to use additional intermediate checkpoints or turnpoints to update your time out since you will not be able to get the full reduction of speed as you are trying to slow down.

A method for remembering when to take out a speed correction is to mark a line on your chart along the courseline.

213. THE COMPLEX SPEED CORRECTION

In the above examples, the speed corrections were straightforward, but what would you do if the time for the correction to come out is after the preflight ETA at the next point? How would you know when to turn if you did not see your point? There is a way to determine your ETA to the next point when the speed correction will come out after you pass it. This method is called the complex speed correction. Actually, it is not all that complex, but there is an extra step involved to the regular computation for a speed correction. Initially, the problem is solved exactly as a normal speed correction. Then, the difference, between the time the speed correction comes out and the preflight ETA to the intermediate point is computed. This number determines how many seconds late or early you will be at that point. So, to solve for the complex speed correction:

1. First, set the speed.

2. Second, solve for time out.

3. Third, update the ETA at the intermediate point.

The following example shows you how it is done.

Example: Your preflight ETA to Point B was 4+48, but you arrive there at 5+32, a whopping 44 seconds late! After the initial shock subsides, you realize that you had been flying the wrong base airspeed and this explains everything. Your new base airspeed is 305; your preflight winds give you 10 knots of tailwind. The preflight ETA to Point C is 10+18. What is your speed correction, when do you take it out, and what is the updated ETA to Point C?

You are late, and you need to speed up. Using our equation, we add 305 (-10) + 30 = 325. You put the speed correction in at time 5+50. As mentioned previously, we are 44 seconds late. Divide 44 by 6 to get 7 with 2 remaining. We need to keep the speed correction in for 7 minutes, 20 seconds. So, (5+50) + (7+20) = 13+10, the speed correction comes out at 13+10. The preflight ETA at Point C is 10+18. If the difference between the two is (13+10) - (10+18) = 2+52. This means we will be in the speed correction for 2+52 past the turnpoint. Round that to 2+50. Now, work backwards from the normal method of computing a speed correction. If we multiply 6 times 2, and add the 5 second of remainder, we would get 17. So we would fly over Point C 17 seconds late, or (10+18) + 17 = 10+29. So our updated ETA at Point C is 10+29.

Notice in the example, the difference between the time out and the preflight ETA at the intermediate checkpoint was used to calculate the updated ETA at the intermediate checkpoint. This is called "the back way" and the accepted method for completing the complex speed correction problem. It is possible to use "the front way", or the time the speed correction went in and the preflight ETA at the intermediate point to come up with an estimate. However, for various reasons, this method is not as accurate, nor the accepted practice.

214. COURSE CORRECTIONS

There are two methods to get back towards course line, the BDHI, and the timed course correction. The two methods basically do the same thing to get you back on your planned course over the ground, but there are some slight differences between them. A BDHI uses a 30º change in heading to move you towards the course line, and a reference point ahead of you is used to determine when to take it out. A 10º or 30º heading change for a specific amount of time allows you to move back towards the course line. In other words, the BDHI uses things in front of you as a reference, while the course correction uses your estimate of how far away from the course line you are (based on checkpoints). Let's examine these tools further to get a better understanding.

Standard correction angles are derived from dividing 60 by the planned groundspeed in NM per minute. Now for 300 KTS we divide 60 by 5 NM per minute giving us a correction angle of 12. A 10° correction for 1 minute will result in a 1 NM correction while a 30° correction for that same amount of time will result in a 3 NM correction. You should put in the compensation as well, what if you have a 20 KTS crosswind, will you actually get back to course with only a 15° correction? (See Appendix C-2).

Example: After fixing, analyzing, and compensating, you are 1 NM left of course, compensated heading 090°. What is your correction? The elapsed time is now 5+30.

1. One option is to simply correct back with 10° of correction for one minute of time.
"Right 105°, time in 5+30, time out 6+30."

2. Another option is to turn 30° for 20 seconds:
"Right 120°, time in 5+30, time out 5+50."

In the above example, either correction would be acceptable, however, a 30° change gets you there faster and is the most commonly used. Additionally, you have the option of extending or reducing the time of correction once it is initiated. This might be necessary, if during the correction, a checkpoint confirms the aircraft is closer or further away from course than expected. Just like with speed corrections, a method many instructors recommend is placing a mark on their course line as a reminder to take out the correction.

The BDHI maneuver is nothing more than intercepting a planned course leading to a specific visual feature. It is the visual low-altitude version of "intercepting the radial."

The same guidelines for using the BDHI procedure in T-6 flights apply to T-39N operations.

The principle guidelines are:

1. The checkpoint must be on or closer to course than the aircraft. It may not be on the opposite side of planned track.

2. The checkpoint must be in sight and within 30 degrees of compensated heading (11 to 1 o'clock).

3. The aircraft is an unknown distance from planned course (otherwise perform a standard correction).

4. With the above conditions met, the BDHI is executed in the same manner, the most significant difference being the requirement to lead the return heading change back to compensated heading.

5. Call for a 30° turn from compensated heading in the same direction as the checkpoint.

6. As the aircraft turns to the new heading, the visual point will drift to the opposite side of the aircraft nose.

NOTE

If the visual point does not cross the 12 o'clock position, return to compensated heading, mark abeam the point and perform a standard correction.

7. Using the HSI or clock position, estimate when back on course by visualizing the checkpoint on your course line.

8. Lead the turn back to course as necessary, so when the maneuver is complete you are on compensated heading with the point at 12 o'clock.

9. Jungle Rules (Homing): Jungle Rules are used only on the target leg and only after visually acquiring the target or target environment. With the target in sight, command the pilot to turn "Hard Left/Right" or "Easy Left/Right". As the target approaches 12 o'clock, have the pilot "Steady up" or "Roll out". In this situation, it is not necessary to cross the target on flight-planned heading.

215. INTERMEDIATE CHECKPOINTS AND FACCU

Along with turnpoints and solid TPPs, intermediate checkpoints play an integral role in low-level navigation sorties. Your ability to fix yourself on visually significant points along the route, then analyze your relationship to course and timing, and come up with appropriate compensations and/or corrections is necessary to be successful. A major part of being able to find these points comes from your preflight planning and your choice of points. Remember that you do not need to pick every road, power line, tower or river along your route as an intermediate. As mentioned in Chapter 1, a few points per leg with big or unique features, preferably vertical development, close to course, and every three to four minutes apart, should be selected.

Airborne, it is critical that you have a familiarity with these checkpoints (you must chairfly the route the night before the flight) and that you can communicate their location to the pilot. The preferred means of communicating intermediate checkpoints (as well as hazards) is "WHEN, WHAT, WHERE". Good descriptive communication would sound like this:

"In one minute, three hundred foot tower, one mile right of course."

This allows the crew to adjust their scans (in this case midway up the horizon and just inside 1 o'clock) to find the checkpoint and then fix. Remember the most accurate fix is abeam and the more you practice fixing, the better you will become on judging distances. Once you have correctly fixed on an intermediate checkpoint, you can do time and course analysis and either correct or compensate or both. All of this goes back to what you've already learned in your WL analysis earlier on. Just like with turnpoints, without a good fix on an intermediate checkpoint, you cannot effectively analyze anything! One method commonly used at intermediate checkpoints is known as FACCU: Fix your position (course and time); Analyze how you got there (winds, course/speed error); Compensate for observed winds; Correct for course or timing (greater than ½ mile or 12 secs); Update ETA to next intermediate checkpoint or turnpoint.

216. ROUTE EXIT PROCEDURES

After completing the low-level route, a common mistake is to become complacent in the "post-target" environment. Do not forget the target is also a low-level turnpoint! Immediately after target cross over give the pilot a HAT brief to include heading, altitude, and change the transponder code to 1200. Remember your priorities for aviation: aviate, navigate, communicate, and finally checklists.

Heading, altitude, and transponder are all aviate items.

If you remembered to set up your NAVAIDs for the exit, as described earlier, this will solve the navigate portion.

As the aircraft climbs, communicate your exit to FSS:

"Anniston Radio, BUCK725, exiting VR-1020, Point E".

FSS will acknowledge and give local altimeter setting. Advise FSS if there were any hazardous conditions encountered on the route. This enables them to pass this information to other aircrew entering the route. FSS personnel are responsible for many functions, and this final courtesy call is important. Don't get hung up if FSS does not respond after the courtesy call, just continue on with navigating and picking up your IFR clearance. To do this, contact the appropriate ATC agency nearest your exit point of the low level. This should have been completed in your mission planning. For the initial contact, the following applies:

"Atlanta Center, BUCK725, 10 miles northeast of Crestview, passing 10,500."

The agency may at this point give a squawk, respond with a clearance following the original flight plan, or they may simply respond with *"BUCK725, go ahead…"*. In this case, request the following:

"BUCK725, request IFR pick-up to Navy Pensacola."

217. SUMMARY

For the most part, procedures for T-39N low-level events are quite similar to those learned in T-6 training. Following solid mission planning, the same basic fundamental process provides the means for low-altitude navigation. The equations, calls and procedures are essentially the same, only the numbers have changed. As with T-6 low-altitude flight, the key to success is proper mission planning in advance. The day prior to a low-level flight should be spent studying the chart, not drawing it. Here are some tips for successful completion of low-levels:

1. Start planning the low-level routes immediately. The sooner you get this accomplished, the more time you will have to study.

2. Crosscheck completed charts with other students then have an instructor check them for errors.

3. Seek out other students for advice on pitfalls and traps they have experienced.

4. Chairfly the route several times using a running stopwatch. A good chairfly method is to use small cards with random errors listed on the back to provide timing/course errors to work through. At each point along the route select a random card and attempt to work through WL analysis or at an intermediate checkpoint, the FACCU process.

5. Know the area inside each turnpoint circle well enough to describe it without reference to your chart. One preflight method is to visualize how the point will appear by sketching it in rough form as you might expect it to appear from the cockpit.

6. Set up a game plan. Determine beforehand how to set up the low-level route entry, where and when to start the descent, where to make required voice communications calls, when to complete checklists, etc. Review the mission-pacing timeline in Figure 2-7 as a guide to help determine where mission pacing is critical.

7. Lastly, make sure your plan is "weather proof": How will you find the point if weather is marginal? Are you prepared for the ANAV backup plan and/or an instrument approach?

CLOCK, CHART, GROUND!

BIG TO SMALL!

LOOK OUTSIDE!

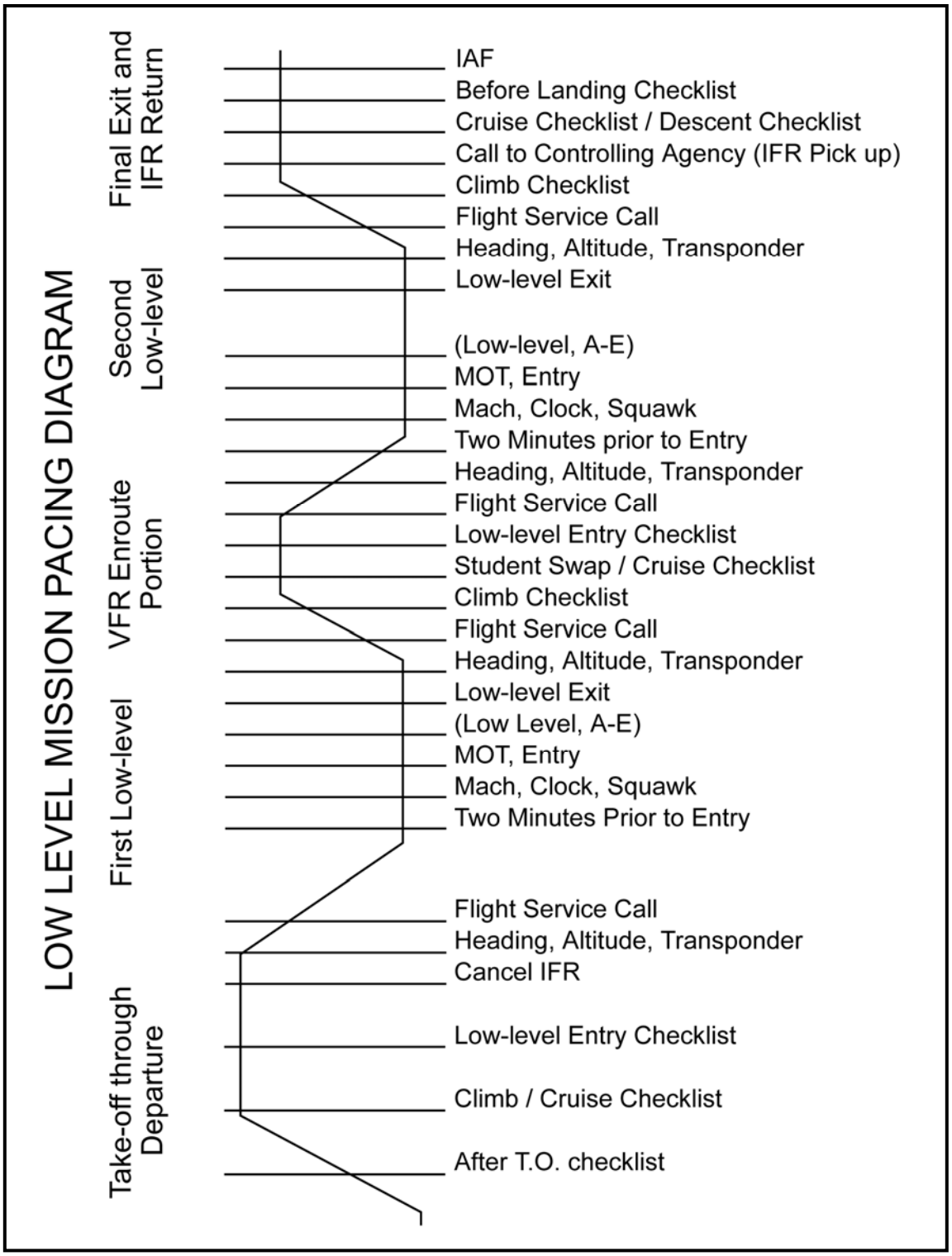

Figure 2-7 T-39 Mission Pacing Diagram

THIS PAGE INTENTIONALLY LEFT BLANK

APPENDIX A
GLOSSARY

A100. N/A

THIS PAGE INTENTIONALLY LEFT BLANK

APPENDIX B
ASSIGNMENT SHEETS

B200. ASSIGNMENT SHEET "A"

Given the following information determine appropriate wind compensations for each situation. Assume airspeed of 300 KTAS.

MC	WIND	HEADING	AIRSPEED
1. 001°	300°/15	_____	_____
2. 127°	310°/10	_____	_____
3. 232°	200°/15	_____	_____
4. 095°	230°/20	_____	_____
5. 338°	130°/15	_____	_____
6. 053°	060°/10	_____	_____
7. 185°	270°/20	_____	_____
8. 269°	330°/15	_____	_____
9. 118°	160°/20	_____	_____
10. 358°	080°/10	_____	_____
11. 151°	100°/30	_____	_____
12. 163°	100°/30	_____	_____
13. 294°	250°/10	_____	_____
14. 306°	350°/20	_____	_____
15. 197°	060°/30	_____	_____
16. 072°	010°/15	_____	_____
17. 276°	010°/25	_____	_____
18. 143°	280°/30	_____	_____
19. 027°	360°/30	_____	_____
20. 203°	070°/10	_____	_____

B201. ASSIGNMENT SHEET "B"

Given the following information determine crosswind component and new compensated heading. The elapsed time shown is the time since the aircraft was last known to be on course. Assume no compensations during the leg duration time and 300 KTAS.

	MC	ELAPSED TIME	DISTANCE (NM) OFF COURSE	CROSSWIND COMPONENT	NEW BASE HEADING
1.	335°	3+00	1/2 Right	_____	_____
2.	017°	3+00	1 Left	_____	_____
3.	121°	6+00	1-1/2 Right	_____	_____
4.	242°	6+00	3 Left	_____	_____
5.	080°	9+00	3 Right	_____	_____
6.	352°	9+00	1-1/2 Left	_____	_____
7.	209°	4+00	2 Right	_____	_____
8.	154°	4+00	1 Left	_____	_____
9.	286°	5+00	2 Right	_____	_____
10.	233°	8+00	2 Left	_____	_____
11.	299°	8+00	1-1/2 Right	_____	_____
12.	318°	4+30	1-1/2 Left	_____	_____

B202. ASSIGNMENT SHEET "C"

Given the following information and using the RMI, determine the wind direction and velocity and a new compensated heading and/or compensated airspeed. The elapsed time shown is the time since the aircraft was last update. Assume the heading was constant and was the same as the MC during the leg duration time. Assume the airspeed was a constant KIAS = KTAS during the leg duration time and a ground speed of 300 knots is the base airspeed.

	ETA	ATA	OFF CRS	DIST. ELAPSE TIME	MC	WIND	NEW HDG	NEW KIAS
1.	6+12	6+30	1-1/2 Left	6+00	189°	_____	_____	_____
2.	7+12	6+42	2-1/2 Left	10+00	327°	_____	_____	_____
3.	8+12	8+24	1 Right	4+00	001°	_____	_____	_____
4.	11+12	11+42	1/2 Right	6+00	234°	_____	_____	_____
5.	12+48	12+34	2-1/2 Left	7+00	358°	_____	_____	_____
6.	13+48	13+58	NONE	10+00	176°	_____	_____	_____
7.	14+48	14+26	2 Right	5+30	283°	_____	_____	_____
8.	16+00	16+25	1 Left	6+15	049°	_____	_____	_____
9.	16+00	15+45	2-1/2 Left	5+00	314°	_____	_____	_____
10.	17+24	17+48	2 Right	6+00	018°	_____	_____	_____
11.	18+36	18+13	NONE	5+45	065°	_____	_____	_____
12.	20+36	20+51	2-1/2 Right	7+30	346°	_____	_____	_____

B203. ASSIGNMENT SHEET "D"

Given the following information determine appropriate standard course corrections for each situation. Assume no wind conditions, temp compensated airspeed of 300 knots and at least six minutes remaining on the leg.

	HEADING	DISTANCE (NM) OFF COURSE	CORRECTION HEADING	CORRECTION DURATION
1.	012°	2 Right	_____	_____
2.	327°	1.5 Left	_____	_____
3.	154°	1 Right	_____	_____
4.	225°	2 Left	_____	_____
5.	349°	3 Left	_____	_____
6.	164°	0.5 Right	_____	_____
7.	048°	1 Left	_____	_____
8.	273°	2.5 Right	_____	_____
9.	021°	2 Right	_____	_____
10.	103°	1.5 Right	_____	_____
11.	301°	2 Left	_____	_____
12.	213°	4 Left	_____	_____
13.	359°	2.5 Left	_____	_____
14.	017°	3 Right	_____	_____
15.	080°	0.5 Left	_____	_____

B204. ASSIGNMENT SHEET "E"

Given the following information, determine appropriate standard time correction for each situation. Assume no wind conditions and KIAS = KTAS.

PREFLT TIME OF ARRIVAL	ACTUAL TIME OF ARRIVAL	RECOMMENDED AIRSPEED	CORRECTION DURATION
1. 8+48	9+00	_____	_____
2. 12+12	11+54	_____	_____
3. 3+36	3+24	_____	_____
4. 5+48	5+24	_____	_____
5. 7+48	8+06	_____	_____
6. 10+00	10+15	_____	_____
7 13+12	13+21	_____	_____
8. 17+36	17+15	_____	_____
9. 21+36	21+51	_____	_____
10. 16+24	16+03	_____	_____
11. 19+12	19+32	_____	_____
12. 23+48	24+16	_____	_____
13. 25+00	24+50	_____	_____
14. 29+24	29+07	_____	_____
15. 6+48	7+01	_____	_____
16. 15+48	16+19	_____	_____
17. 31+00	30+13	_____	_____

B205. ASSIGNMENT SHEET "F"

Compound wind problems.

1. On a low-level flight two minutes prior to your next turn point, your inbound course is 210° and temperature is 27°. You calculated the wind to be from your 10 clock and 20 knots. The outbound course is 270°. The proper heading and airspeed for the two minute prior call is _____° and _____ Knots.

2. On a low-level route you fly over a highway bridge at time 14 + 32. Preflight planning indicated the bridge would be at 9 o'clock, 1 NM at time 14 + 18. If TAS is 300/240 knots and aircraft heading is 336°, you should initiate your correction by turning to a heading of and setting a speed of _____Knots.

3. Low-level route wind analysis indicates winds to be from 8 o'clock at 15 kts (compensations were 2° left crab and base airspeed minus 5 kts tailwind). At your last intermediate check point you were on course and 4 seconds fast. At your next intermediate checkpoint you fix yourself 1/2 NM left of course and 9 seconds fast. Assuming 5 minutes between intermediate checkpoints. What is the new wind in clock code and knots?

4. On a low-level route you fix your position 1-NM left of a fire tower at time 15 + 12. You've preflighted the tower to be 1 NM left course at time 15 + 06. Your last turn point at time 11 + 18, you were on course and on time. Your base course is 175° and base. Airspeed is 295/235 KIAS. What is your correction?

5. You mark yourself ½ NM left abeam a turn point 6 seconds fast. After turning right 90° where are you in terms of course and time?

6. Low-level route wind analysis indicates winds to be from 2 o'clock at 20 KTS (compensations were 3° right crab base airspeed plus 10 KTS headwind). At the last fix, the aircraft was 1/2 NM right of course and 2 seconds slow. At the next intermediate checkpoint, the aircraft is 1 NM left of course 6 seconds fast. Assuming 7 minutes between intermediate checkpoints, what is the new wind in clock-code and knots?

7. On a low-level flight, two minutes prior to your next turn point your inbound course is 035° and temperature is 27°. You calculated the wind to be from your 1 o'clock and 15 knots. Outbound course is 275°. The proper heading and airspeed for the two minute prior call is _____° and _____ Knots.

8. On a low-level route you fly over a microwave tower at time 7 + 48. Preflight planning indicated the tower should be at 3 o'clock, 1 NM at time 7 + 30. If TAS is 290/235 knots and compensated heading is 243° you should initiate the correction by turning to a heading of _____° and setting a speed of _____ Knots.

9. Current compensations are 1° left crab and airspeed plus 10 KTS headwind. At your last intermediate checkpoint you were on course and 6 seconds slow. At your next intermediate check point you fix yourself 1 NM left of course and 11 seconds slow. With 4 minutes between intermediate checkpoints, what is the new wind in clock code and knots?

10. On a low level flight two minutes prior to your next turn point your inbound course is 180° and temperature is 27°. You calculated the wind to be from your 12 o'clock and 20 knots. The outbound course is 090°. The proper heading and airspeed for the two-minute prior call is ° and _____ Knots.

11. Flying a base airspeed of 300/240 knots you cross a checkpoint at 12 + 49 preflighted for 12 + 36. You make the standard speed correction. At time 17 + 49 you realize the correction was not taken out. Assuming error is due to course deviations for weather, what is your correction to get back on time?

12. Compensations are 2° right crab and airspeed minus 5 KTS tailwind. At your last turn point you were 1 NM right of course and on time. At your next intermediate checkpoint you fix yourself ½ NM right of course and 7 seconds slow. Assuming 5 minutes between intermediate check points, what is the new wind in clock 'code and knots?

13. Two minutes prior to the turn point, inbound course is 076° and temperature is 27°. Winds are from 7 o'clock and 15 knots. The outbound course is 051°. The proper heading and airspeed for the two-minute prior call is ____° and _____Knots.

14. The fix over a road intersection is at time 9 + 06. Preflight planning indicated the intersection would be at your 9 o'clock, ½ NM at time 9 + 21. If TAS is 300/240 knots and aircraft heading is 293° you should initiate your correction by turning to a heading of _____° and setting a speed of _____ Knots.

15. Compensations are 2° right crab and airspeed minus 15 KTS tailwind. At your last intermediate checkpoint you were on course and on time. At your next intermediate check point you fix yourself 1 NM right of course and 8 seconds slow. Assuming 7 minutes between intermediate checkpoints, what is the new wind in clock code and knots?

16. The aircraft crosses an intersection at time 15+18. The chart shows the intersection on course with an original time of 15+00. At the previous fix (9+00), the aircraft was on time. With a current compensated airspeed of 295/235, what is the new compensated airspeed, and what is the appropriate correction?

New Air Speed:_____ Accelerate/Slow to _____ IAS for _____ + _____.

17. (Refer to question 16.) After applying the above correction at 16+00, what is the updated time for a turn point that was planned for 18+00?

18. (Refer to question 17.) You have just crossed over the turn point referenced in question 17 at time 18+09. When will your correction be taken out?

B206. ASSIGNMENT ANSWER SHEET

A

1.	359°	305
2.	127°	290
3.	231°	310
4.	098°	285
5.	339°	290
6.	054°	310
7.	189°	300
8.	271°	305
9.	121°	315
10.	360°	300
11.	147°	320
12.	157°	310
13.	293°	305
14.	309°	315
15.	193°	280
16.	070°	305
17.	281°	300
18.	147°	280
19.	025°	325
20.	202°	295

B

1.	10	333°
2.	20	021°
3.	15	118°
4.	30	248°
5.	20	076°
6.	10	354°
7.	30	203°
8.	15	157°
9.	25	281°
10.	15	236°
11.	10	297°
12.	20	322°

C

1.	234/22	192°	315
2.	102/22	330°	285
3.	316/22	358°	315
4.	225/30	233°	330
5.	118/25	002°	290
6.	176/05	176°	305
7.	148/30	279°	280
8.	079/25	051°	320
9.	074/37	320°	285
10.	333/30	014°	320
11.	245/20	065°	280
12.	286/25	342°	310

D

1.	002°	2+00
2.	337°	1+30
3.	144°	1+00
4.	235°	2+00
5.	359	3+00
6.	154°	0+30
7.	058°	1+00
8.	263°	2+30
9.	011°	2+00
10.	093°	1+30
11.	311°	2+00
12.	233°	2+00
13.	009°	2+30
14.	007°	3+00
15.	090°	0+30

E

1.	330	2+00
2.	270	3+00
3.	270	2+00
4.	270	4+00
5.	330	3+00
6.	270	3+30
7.	330	1+30
8.	270	3+30
9.	330	3+20
10.	330	4+40
11.	330	3+20
12.	270	2+50
13.	330	1+40
14.	330	5+10
15.	270	7+50
16.	270	5+30
17.	270	4+10

F

1.	267°	285kts
2.	346°	330kts
3.	7:00	12kts
4.	181° hdg 300-305 kts	
5.	On course, on time	
6.	2:30 to 3:00 at 30kts.	
7.	276-277°, 290-285kts	
8.	233°	320kts
9.	1:00	20kts.
10.	094°	295kts
11.	270kts	for 2+50
12.	3:00	15kts
13.	048-049°, 285-290kts	
14.	303°	270kts
15.	6:00	10kts.
16.	310kts	325kts 6+00
17.	18+12	
18.	21+09	

APPENDIX C
CHART CHECKLIST

Chapter 1 of the FTI contains all the required items of a low-level chart for training at VT-4/10.

This is a tool to use after chart construction as a cross-check:

1. Route corridors highlighted
2. AP-1B points left as pencil dots
3. Turnpoints, IP, and target drawn over correct point
4. 1 doghouse per leg and 1 after the target
5. Class B, C airspace annotated and altitudes labeled
6. Special use airspace hatched edges and labeled with frequency, alt, etc.
7. 2 square diverts, 2 triangles
8. Noise sensitive areas plotted
9. Chum plotted within 10 NM of route or corridor whichever is greater
10. AP-1B, FTI Routing, and Data worksheet glued on back
11. Labeled on front (name, class, date)
12. Signed in the middle in ballpoint pen
13. Entry, exit points labeled with radial/DME
14. Hazards highlighted
15. Crossing routes depicted
16. ATC frequencies (for route abort) annotated
17. Chart trimmed (at least 20 NM of course and destination/departure)
18. Intermediate checkpoints labeled
19. Time ticks match turnpoint times
20. MOA or other AP-1B contact frequencies labeled
21. *Optional* filed points such as TRADR or PENSI plotted and labeled

Day of flight

1. Alternate picked
2. EFR/MCF calculated and annotated on doghouse and data worksheet

STANDARD CORRECTIONS FOR 300 KNOTS

DISTANCE OFF COURSE	CORRECTION	TIME
1/2 mile	10°	0+30
1 mile	10°	1+00
	20°	0+30
	30°	0+20
1.5 miles	10°	1+30
	30°	0+30
2 miles	10°	2+00
	20°	1+00
	30°	0+40
2.5 miles	10°	2+30
	30°	0+50
3 miles	10°	3+00
	20°	1+30
	30°	1+00

Figure C-1 Timed Corrections