NAVAL AIR TRAINING COMMAND

NAS CORPUS CHRISTI, TEXAS **CNATRA P-857 (REV. 10-02) PAT**

TRAINEE T-39 NATOPS WORKBOOK

FLIGHT TRAINING INSTRUCTION

INTERMEIDATE PHASE

BASIC SNFO

2002

DEPARTMENT OF THE NAVY
CHIEF OF NAVAL AIR TRAINING
CNATRA
250 LEXINGTON BLVD SUITE 102
CORPUS CHRISTI TX 78419-5041

CNATRA P-857
N3111

01 NOV 2002

CNATRA P-857 (Rev. 10 - 02)

Subj: T-39 NATOPS WORKBOOK FLIGHT TRAINING INSTRUCTION, INTERMEDIATE PHASE, SNFO

1. CNATRA P-857 (Rev. 10-02) PAT, "T-39 NATOPS Workbook Flight Training Instruction, Intermediate Phase, SNFO" is issued for information, standardization of instruction, and guidance of all flight instructors and students in the Naval Air Training Command

2. This publication will be used to supplement the curriculum at Training Air Wing Six.

3. Recommendations for change shall be submitted to Commander, Training Air Wing SIX, Naval Air Station, Pensacola FL 32508-5200 via TIP form (CNATRA 1550/13) in accordance with CNATRAINST 1550.6D.

4. CNATRA P-857 (Rev. 06-97) is hereby cancelled and superseded.

R E Bird

R. E. BIRD
Assistant Chief of Staff for
Training and Operations

Distribution:
CNATRA (5)
COMTRAWING SIX (296)

LIST OF EFFECTIVE PAGES

Dates of issue for original and changed pages are:
Original...0...31 Oct 02 (this will be the date issued)

TOTAL NUMBER OF PAGES IN THIS PUBLICATION IS 78 CONSISTING OF THE FOLLOWING:

Page No.	Change No.
COVER	4-8(Blank)
LETTER	5-1 –5-3
iii –ix	5-4(Blank)
x (Blank)	6-1 6-6
1-1 – 1-9	7-1 – 7-7
1-10 (Blank)	7-8 (Blank)
2-1 – 2-7	8-1 – 8-8
2-8(Blank)	9-1 – 9-4
3-1 – 3-7	A-1 – A-3
3-8(Blank)	A-4 (Blank)
4-1 – 4-7	

INTERIM CHANGE SUMMARY

The following Changes have been previously incorporated in this manual:

CHANGE NUMBER	REMARKS/PURPOSE

The following interim Changes have been incorporated in this Change/Revision:

INTERIM CHANGE NUMBER	REMARKS/PURPOSE	ENTERED BY	DATE

FOREWORD

COURSE OBJECTIVE: To provide the student with a level of T-39N/G NATOPS knowledge allowing for learning, understanding, and performing in ground, flight, and emergency procedures taught in the follow-on stages of flight training.

SPECIFIC INSTRUCTIONAL OBJECTIVE: Upon completion of this course, the student will demonstrate his/her knowledge of the T-39N/G NATOPS by completing the end-of-course examination with a minimum of 80% accuracy for systems knowledge and 100% accuracy for emergency procedures.

INSTRUCTIONAL PROCEDURES:

1. Each unit topic will contain the Terminal Objective, Enabling Objectives, description of the subject area and sample questions as well as required amplifying illustrations.

2. The student workbook is designed to reinforce instructors' lectures, demonstrations, and is used in conjunction with the NATOPS manual and SHALL not be considered an all- inclusive study guide. Should conflicts exist between this guide and NATOPS, NATOPS will take precedence.

3. Study the reading assignment and complete the end-of-chapter questions prior to going to class. Be sure to ask questions if any of your instructional material is not clearly understood.

REFERENCE MATERIAL

T-39N/G NATOPS Manual
T-39 NATOPS PCL

TERMINAL OBJECTIVE: Operate and assess an aircraft and its systems in accordance with NATOPS and Flight Training Instructions, reporting any anomaly to the instructor.

TABLE OF CONTENTS

LIST OF EFFECTIVE PAGES III
INTERIM CHANGE SUMMARY IV
FOREWORD V
TABLE OF CONTENTS VI
SAFETY NOTICE VIII
HOW TO USE THIS STUDENT GUIDE IX

UNIT ONE: ENGINES 1-1
REFERENCE: T-39 NATOPS MANUAL 1-1
ENABLING OBJECTIVE: 1-1
ENABLING STEP: 1-1
NATOPS ONE: ENGINES 1-1
UNIT ONE REVIEW QUESTIONS 1-8

UNIT TWO: FUEL SYSTEM 2-1
REFERENCE: T-39 NATOPS MANUAL 2-1
ENABLING OBJECTIVE: 2-1
ENABLING STEP: 2-1
NATOPS TWO: FUEL SYSTEM 2-1
UNIT TWO REVIEW QUESTIONS 2-6

UNIT THREE: ELECTRICAL SYSTEM 3-1
REFERENCE: T-39 NATOPS MANUAL 3-1
ENABLING OBJECTIVE: 3-1
ENABLING STEP: 3-1
NATOPS THREE: ELECTRICAL SYSTEM 3-1
UNIT THREE REVIEW QUESTIONS 3-6

UNIT FOUR: HYDRAULIC SYSTEMS 4-1
REFERENCE: T-39 NATOPS MANUAL 4-1
ENABLING OBJECTIVE: 4-1
ENABLING STEP: 4-1
NATOPS FOUR: HYDRAULIC SYSTEMS 4-1
UNIT FOUR REVIEW QUESTIONS 4-6

UNIT FIVE: FLIGHT CONTROLS 5-1
REFERENCE: T-39 NATOPS MANUAL 5-1
ENABLING OBJECTIVE: 5-1
ENABLING STEP: 5-1
NATOPS FIVE: FLIGHT CONTROLS 5-1
UNIT FIVE REVIEW QUESTIONS 5-3

UNIT SIX: ANTI-ICE/DE-ICE SYSTEMS 6-1
REFERENCE: T-39 NATOPS MANUAL 6-1
ENABLING OBJECTIVE: 6-1
ENABLING STEP: 6-1
NATOPS SIX: ANTI-ICE/DE-ICE SYSTEMS 6-1
UNIT SIX REVIEW QUESTIONS 6-5

UNIT SEVEN: ENVIRONMENTAL SYSTEMS 7-1
REFERENCE: T-39 NATOPS MANUAL 7-1
ENABLING OBJECTIVE: 7-1
ENABLING STEP: 7-1
NATOPS SEVEN: ENVIRONMENTAL SYSTEMS 7-1
UNIT SEVEN REVIEW 7-6
UNIT EIGHT: AVIONICS SYSTEMS 8-1
REFERENCE: T-39 NATOPS MANUAL 8-1
ENABLING OBJECTIVE: 8-1
ENABLING STEP: 8-1
NATOPS EIGHT: AVIONICS 8-1
UNIT EIGHT REVIEW QUESTIONS 8-6
UNIT NINE: EMERGENCY PROCEDURES 9-1
REFERENCE: T-39 NATOPS MANUAL 9-1
ENABLING OBJECTIVE: 9-1
ENABLING STEP: 9-1
NATOPS NINE: EMERGENCY PROCEDURES 9-1
APPENDIX A – T-39 AIRCRAFT LIMITATIONS A-1
AIRSPEED LIMITATION A-1
RPM LIMITATIONS A-1
TEMPERATURES A-2
ELECTRICAL A-2
MISCELLANEOUS A-3

SAFETY NOTICE

The NATOPS information taught in this course is provided as a basis from which the aircrew can safely operate aircraft systems during normal operating conditions and during emergency operation. All lectures take place in a classroom setting, and as such do not require safety precautions. Emphasis must be provided during coverage of cockpit familiarity, egress, and external preflight training to preclude any unsafe practices from occurring in or near the aircraft.

Students are encouraged to supplement their NATOPS training by spending time in the cockpit to become familiar with the equipment. Always check with Raytheon (will soon be Vertex) Maintenance Control before going in an aircraft. Do not reset any pulled circuit breakers or turn on the battery, standby gyro, emergency lights or passenger oxygen switches. If maintenance is being performed on the aircraft, avoid moving the yoke or rudder pedals.

HOW TO USE THIS STUDENT GUIDE

This Student Guide provides the lesson objectives and information sheets to augment the instructor presentations and the NATOPS Flight Manual/PCL. This outline will follow the topics in sequence as presented by the instructors. The instructor will make daily reading assignments. Additionally, you are required to answer all questions at the end of each unit, prior to class. This study guide should be viewed as a supplement. The NATOPS Flight Manual and PCL are the primary source for all aircraft information.

THIS PAGE INTENTIONALLY LEFT BLANK

UNIT ONE: ENGINES

REFERENCE: T-39 NATOPS MANUAL

ENABLING OBJECTIVE:

A.1 Locate and operate T-39N/G aircraft systems, given a mission in a T-39 in accordance with NATOPS.

ENABLING STEP:

A.1.2 Recall the basic description, related systems, and operating limitations of the JT12A-8A gas turbine engines in the T-39N/G.

NATOPS ONE: ENGINES

A. Pratt and Whitney JT 12A-8A.

1. A turbo jet engine mixes incoming air with fuel, ignites the mixture and creates thrust. All incoming air passes through the combustion chambers.

2. Air is compressed by a single rotor, nine-stage, axial-flow compressor that is driven by a two-stage reaction turbine.

   a. The accessories gearbox is powered by the compressor. The gearbox drives the AC & DC generators, oil pump, fuel control and engine driven fuel pump.

3. The air then passes into a can-annular combustion chamber.

   a. The combustion chamber contains 8 burner cans in which the fuel is injected through a single, dual orifice nozzle mounted at the inlet of each can.

   b. Two igniters, one each in the No. 3 and No. 6 cans, ignite the fuel/air mixture. Initially, this spreads to all burner cans through flame tubes, and is then self-sustaining.

4. The hot expanding gas drives the two-stage turbine before being exhausted as thrust.

B. Thrust

1. Rated at 3300# takeoff thrust at sea level.

2. Engine Pressure Ratio (EPR) is the primary reference for setting thrust, provided RPM and EGT are not exceeded.

3. FF, EPR, oil pressure, and fuel quantity gauges need electrical power; RPM and EGT are self-generating through the accessory gearbox.

C. Engine Fuel Control

1. An engine driven hydromechanical unit, controlled by a mechanical linkage to the throttle, meters fuel to the engine.

2. A mechanical computer receives signals from compressor inlet pressure (PT2), engine RPM, throttle position, and compressor discharge pressure (PT5) to meter fuel to meet required thrust.

3. An engine driven, two element (centrifugal and gear) fuel pump supplies high pressure fuel to the engine. Loss of the gear element of the fuel pump will result in flameout.

4. The centrifugal element has suction feed capabilities to at least 15,000' MSL if a wing tank mounted boost pump fails, regardless of fuel temperature.

D. Oil system

1. Lubricates and cools the engine bearings. Engine oil pump is located on the engine accessory gearbox.

2. Fuel/oil cooler maintains normal operating range of 40-120 C. Temperature is controlled by adjusting fuel flow (via throttles). Primary purpose is to cool the oil.

3. Total capacity is 2.03 U.S. gallons; 1.6 U.S. gallons is full servicing.

4. Normal oil pressure is 40-50 psi with fluctuations of ±5 psi; idle is 35 psi min.

5. OIL PRESS LOW light if the oil pressure falls below 28 psi. Check gauges to determine affected engine then execute OIL PRESSURE (below 35 PSI) EP.

E. Ignition

1. Two igniters: Located in the No. 3 and No. 6 burner cans.

2. No. 3 igniter may spark continuously. No. 6 is duty cycle limited:

   2 min ON, 3 min OFF

   2 min ON, 23 min OFF

3. Red starter button(s) illuminate anytime igniter(s) are providing spark to engine.

4. SWITCH POSITION

   a. CONTINUOUS: Constant power to the No.3 igniter only. Selected during: (1) T/O (2) LDG, (3) flight in icing conditions, turbulence, or heavy precipitation, or (4) anytime FUEL FILTER BLOCK caution light illuminates.

   b. NORMAL: Powers BOTH igniters during: (1) engine start (from throttle advancement to idle until 31-35% RPM), (2) with AIRSTART SWITCH in LH or RH position, or (3)during stall warning.

F. Start Sequence

1. ENGINE MASTER switches ON:
   a. Opens the respective fuel shutoff valve (FUEL SHUTOFF FAIL light while valve in transition).
   b. Arms igniters to come on with throttle at IDLE.
   c. Energizes wing mounted centrifugal fuel boost pump.
   d. Provides DC essential bus power to T/R system.
   e. Arms hydraulic warning horn.
2. Depress push-pull starter button. Hold until 30% RPM in case the DC voltage is insufficient to hold the solenoid.
   a. May be pulled out to suspend engine start.
   b. Pops out at 31-35% rpm with the starter current less than 200 amps to terminate start cycle.

NOTE: *Starter must be out before generator will work.*

3. Throttle to IDLE at 8-10% RPM, ignition is energized. A red light in starter button indicates that ignition is on.
4. Starter/Generator
   a. Performs as a starter until 31-35% rpm.
   b. Starter cycle limitation:
      (1) Four 30-second cycles in a 20 minute period with 2 minutes between cycles.
   c. Generator will come online at 40% unless the starter button is stuck.
5. Ignition on until 31-35%.
6. Start ABORT criteria:

   After depressing the starter button:

   a. 8-10% RPM not attained in 15 seconds
   b. No oil pressure within 20 seconds

   After moving the throttle to IDLE

   c. Fuel flow < 260 or > 600 PPH (hot start)
   d. No light off within 20 seconds (wet start)
   e Engine fails to reach IDLE (42% + 1% RPM) within 1 minute (hung start)
   f. Max tailwind for start is 10 kts.

g. On 1st engine start, EGT, RPM, and fuel flow are available, remaining engine instruments available once generator on line. Oil Pressure is avail on a cart start but not with BATT start.

7. Hot Start Characteristics

a. Rapid rise through 475 (not to exceed) or reaching 525.

b. Other factors for hot start include initiating start at a low battery state or low rpm

c. Fuel flow over 600# per hour resulting in improper fuel-air ratio

d. Engine rpm hanging up and failing to accelerate to idle rpm in a normal manner after ignition.

8. AIRSTART switch

a. LH ON, RH ON

b. Provides ignition to both igniters.

c. May have to reset DC generator if engine RPM decays below 40%.

d. Airstart switch must be OFF before gen will come on-line.

e. Use starter button to assist airstart if rpm < 10-20% instead of AIRSTART switch.

f. Airstart envelope - max alt 29,000 ft / min airspeed 160 KIAS (see fig 5-4).

G. Bleed Air

1. Fourth-stage interstage bleed valve cycles to preclude compressor instability at low thrust settings.

a. This is known as the bleed strap, and it should close above 80 $\pm$ 1% rpm. If the bleed strap does not close, the resulting possibility is undesirable stress in the compressor section of the engine.

2. High pressure 9th-stage bleed air is for airframes use (pressurization, anti-ice).

3. Bleed air valves controlled by FIRE pull handles and Cabin Air Selector switch.

4. With both engines at the same EPR setting, an interstage bleed valve stuck in the open position above 80% $\pm$1 will be indicated by a higher RPM, EGT, and FF.

H. Fire and overheat detection

1. Continuous element alarm to detect fire (forward engine pod) or overheat (aft engine pod).

2. Detection of fire or overheat results in red light in the FIRE pull handle and an (loud) alarm bell, accompanied by master caution lights.

3. Limit the fire test to once in any 10 minute period.

4. AFT FUS HOT light at 135°C (battery compartment, hydraulic reservoir, pressurization bleed air ducts).

5. Pulling the FIRE handle:

   a. Closes respective fuel shutoff valve.

   b. Places respective DC and AC gen's off line.

   c. Closes respective engine bleed air valve & emergency bleed air valve for RH engine.

   d. Positions direction valve (if RH).

   e. Arms the fire bottle discharge valves.

   f. Fire bell shutoff.

   g. Arms the fire extinguisher selector switch.

   h. Illuminates the fire control panel.

   i. Deactivates the thrust reverser hydraulic control valve, if the T/R switch is ON.

   j. Pulling a second Fire Pull Handle will reset everything except the generator, provided the engine master switch has not been moved to OFF.6. One or both bottles may be discharged into either engine.

7. Extinguisher bottle

   a. Pressure gauge in each wheel well. Preflight check NOT required by crew.

   b. Two disk indicators on fuselage are below left engine.

      (1) Yellow - One or both bottles discharged to the engine

      (2) Red - The fire bottle has been vented overboard due to overheat

8. Fire test - 5 lights will be illuminated and a bell will sound.

   2 FIRE pull handle, 2 master caution, AFT FUS HOT

I. Thrust reversers

1. Provides deceleration during aborted T/O or during LDG. Decreases rollout by 24%.

2. Separate accumulator: precharged to 900 $\pm$ 50 psi

3. Cockpit light indications (one for each T/R): Yellow ARM, red UNLOCK, blue DEPLOY lights.

4. Switch positions

   a. OFF: no power.

   b. ON: power available to T/R if main gear down and locked and throttles are IDLE; WEIGHT ON WHEELS NOT REQUIRED.

c. EMERG STOW: Hydraulic pressure directed and maintained to the actuator stow ports; used for T/O and LDG.

5. Operation

a. Before landing, determine an EPR setting (if the field elevation > 3000 MSL) or set the lever stops for field temperature.

b. Throttles to IDLE at or before touchdown.

c. On deck

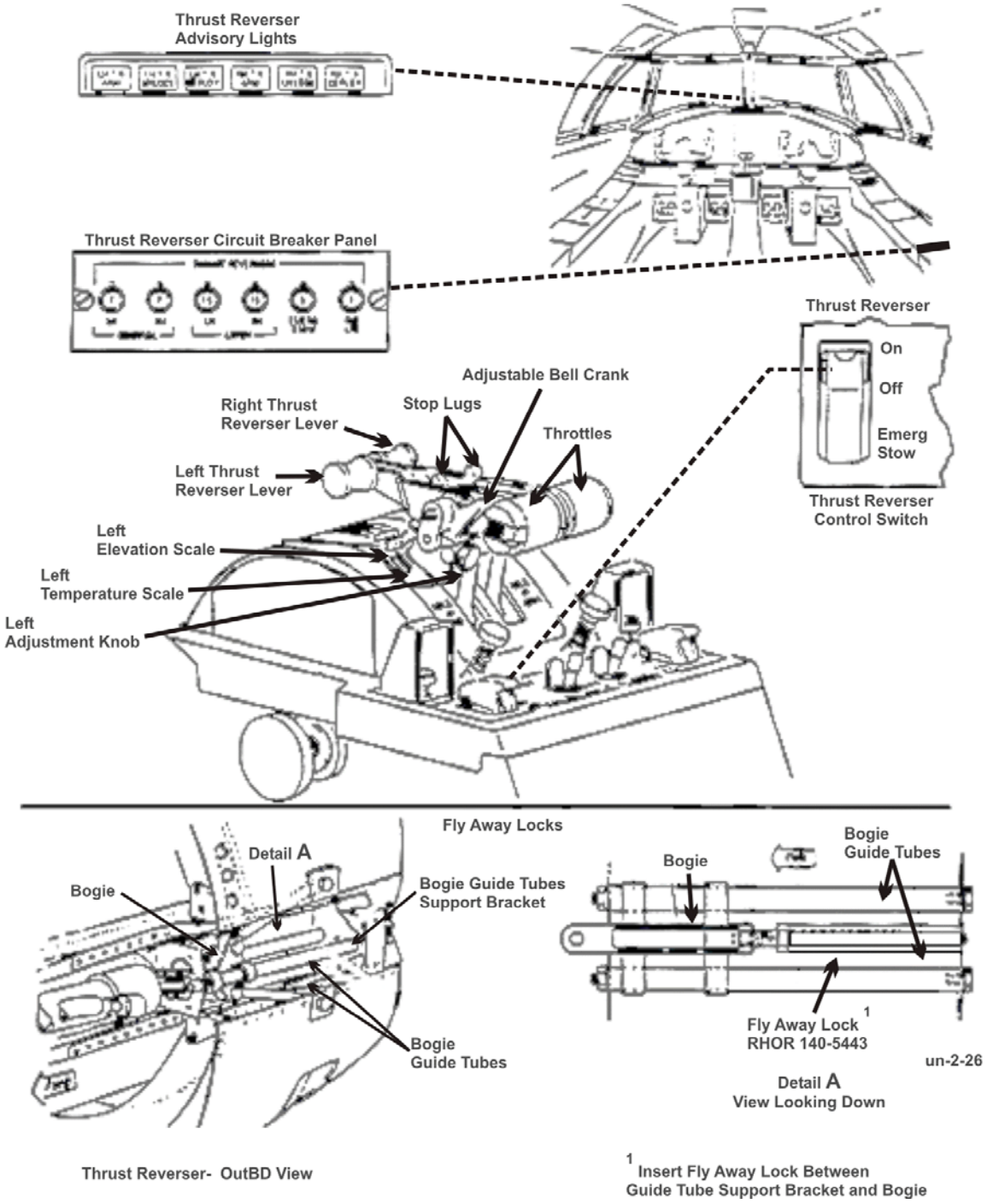

Figure 1-1.
Thrust Reverser Controls and Indicators (un-2-26)

UNIT ONE REVIEW QUESTIONS

1. The T-39N/G uses turbojet engines designated _____.

2. T-39N/G engines are rated at _____ lbs of thrust at sea level.

3. The two stage reaction turbine drives the _____.

4. The nine stage axial-flow compressor drives the _____.

5. Fuel flow to the burners is metered by _____.

6. Starter/generators act as starters until _____ % rpm.

7. Start sequence may be terminated by _____.

8. Ignition is provided during start by _____ igniters provided the _____ switches are ON and the throttles are at IDLE.

9. The ignition duty cycle is _____ min ON, _____ min OFF
_____ min ON, _____ min OFF

10. Start abort criteria:

RPM fails to reach 8-10% in _____ seconds

Fuel flow outside _____ to _____ lbs/hr

EGT rises above _____ C (or rapidly through _____ C)

No oil pressure in _____ seconds

Fails to reach idle rpm in _____ seconds

11. The use of CONTINUOUS ignition is limited by the ignition duty cycle. (TRUE/FALSE)

12. The primary reference for setting power is the _____. Providing EGT and RPM are not exceeded.

13. Hot start characteristics are:

_____ Battery state

Initiating start at _____ rpm.

Fuel flow over _____ during initial start will result in an improper fuel-air ratio which will invariably cause a very rapid rise in EGT.

_____ hanging up and not accelerating to idle rpm in a normal manner after ignition.(hung start??)

14. Complete the following engine limits:

RPM: Idle _____, maximum _____

EGT: Idle _____, max continuous _____

T/O or acceleration _____

Oil: Idle _____ psi, normal _____ psi/ _____ºC

15. The OIL PRESS LOW caution light illuminates when oil pressure falls below _____ PSI.

16. Thrust reverser ARM lights illuminate when _____, _____ and _____ (provided the engine masters are on)

17. During takeoff and landing, the thrust reverser switch must be placed to _____.

18. The MASTER CAUTION light will illuminate if either thrust reverser _____ or _____ light comes on in-flight.

19. Pulling a FIRE PULL handle will close the _____ and _____ shutoff valves, take the _____ off the line, arm the _____, silence the _____, and position the extinguisher direction valve (if the _____ handle is pulled).

20. Both fire bottles may be discharged into one engine. (TRUE/FALSE)

21. On preflight, the red fire bottle indicator disk is ruptured. This indicates _____.

THIS PAGE INTENTIONALLY LEFT BLANK

UNIT TWO: FUEL SYSTEM

REFERENCE: T-39 NATOPS MANUAL

ENABLING OBJECTIVE:

A.1 Locate and operate T-39 N/G aircraft systems, given a mission in a T-39 in accordance with NATOPS.

ENABLING STEP:

A.13 Recall the basic description, related systems, and operating limitations of the T-39 fuel system.

NATOPS TWO: FUEL SYSTEM

A. Fuels

1. Military: JP-4. JP-5. JP-8
2. JET B+, JET A, JET A+ (PRIST not necessary)

B. Fuel tank capacities/limitations

1. Fuselage tank (161 gals, 1100#) plus two wing tanks (451 gals each, 6130# total).
2. Total usable fuel of 1063 gals, or 7200# based on JP-5 (6.8#/gal. - standard day). 6900# based on JP-4 (6.5#/gal. - standard day).
3. Max imbalance is 200# during T/O and LDG, 400# en route.
4. Zero fuel weight: T-39N 13,300# (crew & baggage) 11,700# (empty).

Max gross weight: T-39N 20,422#, T-39G 20,372#.

5. Max takeoff weight: T-39N 20,037#, T-39G 20,172#.
6. Max landing weight: T-39N 17,500#, T-39G 17,500#.
7. Second segment fuel consideration - minimum climb gradient of 2.4% (24ft /1000ft of downrange travel) at V2 (safe single eng climb speed) to a minimum of 400 feet AGL or obstacle clearance altitude, whichever is higher. (Gear up/flaps up/take-off thrust). Since A/C weight, air temp, and field elevation are the factors for maintaining this minimum climb gradient, fuel weight may have to be reduced to maintain second segment climb.

C. Fuel transfer (refer to NFM FO-9)

1. Gravity feed from fuselage to wing tanks.

2. Transfer ejector pumps, in wings use motive flow to direct fuel to boost pumps.

3. LH/RH wing mounted centrifugal boost pumps (electrical driven) - Energized when respective Engine Master ON. Provide pressurized (17-30 psi) fuel to engine driven pump. 200# unavailable if a boost pump fails. (400# if both fail)

4. Engine-driven two-element pump (centrifugal boost and gear) delivers high pressure fuel to the engine fuel control. FUEL LOW PRESS light if the pressure difference across the centrifugal pump < 6 psi.

5. Fuel pressurization and dump valve automatically directs fuel to fuel burner manifolds (dump on shutdown).

6. No fuel jettison capability.

7. Normal fuel flow 300# to 3300#/hr. On start fuel flow limits 260# - 600#/hr.

D. Fuel shutoff valve

1. Downstream of wing mounted electric boost pumps.

2. Check open when Engine Master ON (FUEL SHUTOFF FAIL light).

E. Fuel filter

1. Between centrifugal and gear elements of the engine-driven pump.

2. FUEL FILTER BLOCK light on if differential exceeds 7-8 psi; bypassed if differential exceeds 9-11 psi.

F. Fuel heat

1. Use when fuel temp at or below 0 C or with FUEL FILTER BLOCK light on. One minute time limit each 30 minutes (may overheat oil). Do not use during T/O or landing.

G. FUEL X-FEED & TANK SEL Switch

1. NORM: <u>Each side is independent:</u> the right wing tank provides fuel for the right engine, and the left wing tank provides fuel for the left engine. Both tank and pump x-feed valves closed, both wing mounted boost pumps ON.

2. LH/RH TANK: Used for normal fuel balancing, select HEAVY tank. Pump x-feed valve opens (but the wing tank x-feed valve stays closed). Boost pump in the wing opposite the selected side is de-energized.

2-2 FUEL SYSTEM

3. X-FEED: Used for single-engine or if a boost pump has failed. Both x-feed valves open; both boost pumps ON (even if one Engine Master is off).

4. If balancing is required with X-FEED selected, put the heavy wing high to gravity transfer 100#/minute.

H. FUEL LOW PRESS light

1. Either a wing mounted boost pump or the engine driven centrifugal boost pump has failed. If the light stays ON - Engine driven centrifugal boost pump failed; select NORM. If the light goes OUT - Wing mounted boost pump has failed.

I. Quantity indicator

1. Two fuel quantity gauges on center instrument panel are primary fuel quantity indicators.
2. Three-position fuel quantity indicator switch located right of pilot's yoke:
   a. RH IND RH WING/LH IND AUX -RH gauge indicates right wing fuel quantity. LH gauge indicates fuselage (aux) fuel quantity.
   b. TOTAL-Each gauge indicates half of fuselage and it's respective wing fuel quantity.
   c. TEST-Causes fuel quantity indicator needles to rotate counter-clockwise to check FUEL LEVEL LOW lights (300#)
   d. FUEL LEVEL LOW LIGHT is solely a function of gauge reading, not an independent measure.
3. T-39N only - Digital fuel remaining indicators for co-pilot and each student station. Accuracy ±80# (advisory indicators only)

J. Fueling (Sec 1, part III, Aircraft Servicing)

1. Single point - right wing, inboard, leading edge. (At 50 psi, all tanks fill in 12 mins.)
2. Gravity - port is above right engine; hold wingtip flapper valves (located inside overwing gravity filler ports) open for ventilation. Each wing can also be filled separately through overwing gravity filler ports.

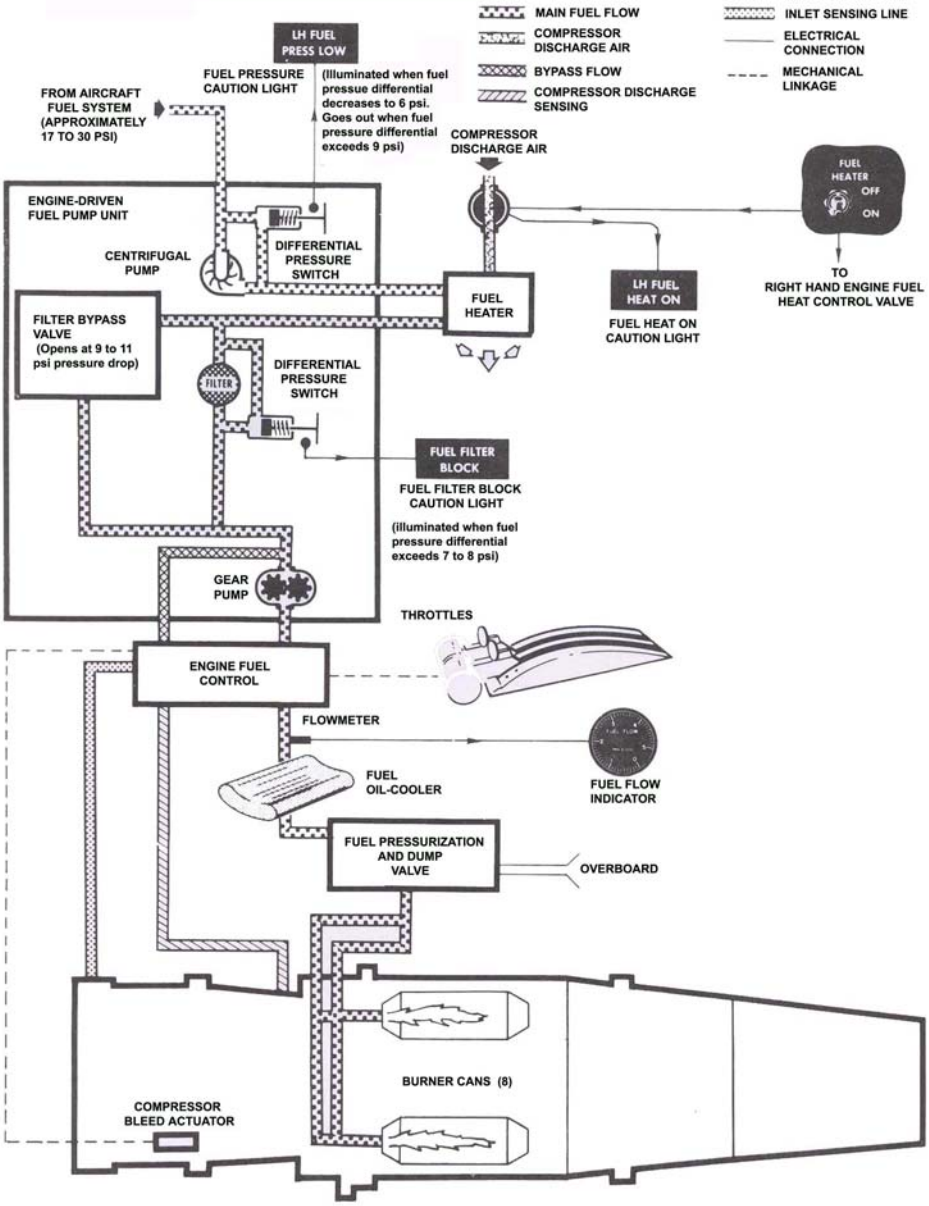

Figure 2-1
Engine Fuel Control System (un 2-20)

2-4 FUEL SYSTEM

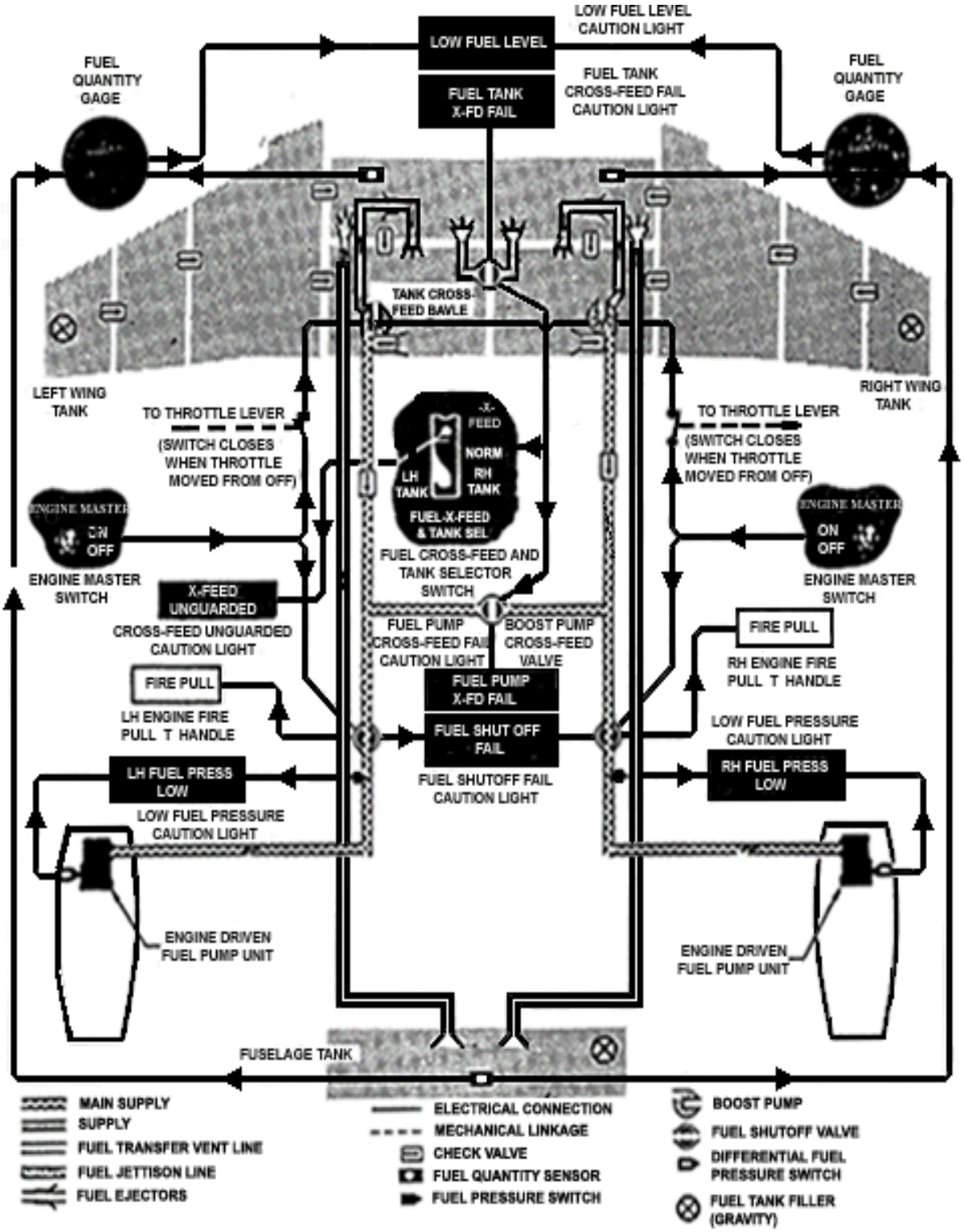
LOW FUEL LEVEL
LOW FUEL LEVEL CAUTION LIGHT
FUEL TANK X-FD FAIL
FUEL TANK CROSS-FEED FAIL CAUTION LIGHT
FUEL QUANTITY GAGE
FUEL QUANTITY GAGE
TANK CROSS-FEED BAVLE
LEFT WING TANK
RIGHT WING TANK
TO THROTTLE LEVER
(SWITCH CLOSES WHEN THROTTLE MOVED FROM OFF)
TO THROTTLE LEVER
(SWITCH CLOSES WHEN THROTTLE MOVED FROM OFF)
-X-FEED
NORM
LH TANK
RH TANK
FUEL-X-FEED & TANK SEL
FUEL CROSS-FEED AND TANK SELECTOR SWITCH
ENGINE MASTER
ON
OFF
ENGINE MASTER SWITCH
ENGINE MASTER
ON
OFF
ENGINE MASTER SWITCH
X-FEED UNGUARDED
CROSS-FEED UNGUARDED CAUTION LIGHT
FUEL PUMP CROSS-FEED FAIL CAUTION LIGHT
BOOST PUMP CROSS-FEED VALVE
FIRE PULL
RH ENGINE FIRE PULL T HANDLE
FIRE PULL
LH ENGINE FIRE PULL T HANDLE
FUEL PUMP X-FD FAIL
FUEL SHUT OFF FAIL
FUEL SHUTOFF FAIL CAUTION LIGHT
LOW FUEL PRESSURE CAUTION LIGHT
LH FUEL PRESS LOW
RH FUEL PRESS LOW
LOW FUEL PRESSURE CAUTION LIGHT
ENGINE DRIVEN FUEL PUMP UNIT
ENGINE DRIVEN FUEL PUMP UNIT
FUSELAGE TANK
MAIN SUPPLY
SUPPLY
FUEL TRANSFER VENT LINE
FUEL JETTISON LINE
FUEL EJECTORS
ELECTRICAL CONNECTION
MECHANICAL LINKAGE
CHECK VALVE
FUEL QUANTITY SENSOR
FUEL PRESSURE SWITCH
BOOST PUMP
FUEL SHUTOFF VALVE
DIFFERENTIAL FUEL PRESSURE SWITCH
FUEL TANK FILLER (GRAVITY)

Figure 2-2

UNIT TWO REVIEW QUESTIONS

1. Each wing tank holds _____ gallons and the fuselage tank holds _____ gallons for a total of _____ gallons (approx. _____ lbs JP-5).

2. Gravity fueling is normally accomplished through overwing ports located on the outboard section of each wing. (TRUE/FALSE)

3. The _____ pumps provide fuel pressure to the engine driven pumps.

4. The wing-mounted boost pump is energized whenever the _____ switch is ON.

5. Under most conditions, the FUEL X-FEED & TANK SEL switch is left in the _____ position.

6. The LOW FUEL LEVEL caution fight illuminates at an indicated fuel quantity of _____ lbs or less on either fuel quantity gauge.

7. The fuel filter is downstream of the gear element of the engine driven pump. (TRUE/FALSE)

8. The motive flow for the transfer ejector in the forward section of each wing tank is provided by _____.

9. Suction feed is reliable to at least _____ feet regardless of fuel temperature.

10. The FUEL FILTER BLOCK caution light will illuminate with a differential of _____ to psi. Actual bypass of the filter occurs at _____ to _____ psi.

11. Allowable fuel imbalance is _____ lbs in level flight or _____ lbs for takeoff and landing.

12. The _____ position of the FUEL X-FEED & TANK SEL switch is used for single engine operation or if the FUEL LOW PRESS fight illuminates.

13. Selecting X-FEED automatically turns on _____ and opens the _____ valve (s).

14. The LOW FUEL LEVEL caution fight operates independently of the fuel quantity gauges. (TRUE/FALSE)

15. The digital fuel remaining indicators operate independently of the fuel quantity gauges. (TRUE/FALSE)

16. Normal fuel flow is _____ to _____ lbs/hr.

17. Pressure refueling will fill all tanks in approximately minutes.

18. The _____ or _____ position of the FUEL X-FEED & TANK SEL switch is used for fuel balancing.

19. Selecting LH TANK turns off the _____ and opens the _____ valve (s).

20. The fuel heater is used if fuel temperature is _____ or if the _____caution light illuminates.

21. Fill in: Boost/Tank x-feed -OPEN or CLOSED
LH/RH boost pump- OFF or ON

Switch position	Boost x-feed	Tank x-feed	LH boost pump	RH boost pump
X-FEED				
NORMAL				
LH				
RH				

THIS PAGE INTENTIONALLY LEFT BLANK

UNIT THREE: ELECTRICAL SYSTEM

REFERENCE: T-39 NATOPS MANUAL

ENABLING OBJECTIVE:

A-1 Locate and operate T-39N/G aircraft systems, given a mission in a T-39 in accordance with NATOPS.

ENABLING STEP:

A.1.4 Recall the basic description, related systems, and operating limitations of the T-39N/G electrical system.

NATOPS THREE: ELECTRICAL SYSTEM

A. DC Power sources

1. Two external power receptacles located under left engine inlet.
   a. Oval utility outlet powers all buses except starter bus. Used for ground maintenance. 28 VDC, 300 amps.
   b. Rectangular starter outlet. 28 VDC, 800 amps minimum required. Powers starter bus only. (Batteries disconnected from start bus but still powers DC Essential bus.)
2. Batteries (5 batteries total in T-39)
   a. - Two 26 volt, 40 amp hr, normally in parallel (in series for battery start).

      - Temp gauges - amber at 120°F, red at 150°F (BATT HOT master caution)

      - Approx 45 minutes of power avail in the event of dual gen failure. (Battery power only. Secure hydraulic pump in T-39G model and use only if necessary.)
   b. Two 7.2 volt batteries, each powers half of the emergency lights (30 minutes).
   c. One Emergency standby attitude gyro battery (4 hours).
3. DC Generators
   a. Two 28 volt, 400 amp engine-driven starter-generators. (Normal v = 27.5 - 29.5)
   b. Powers the paralleling bus directly.
   c. Act as starters during engine start (31-35%)

B. DC power distribution (see FO-7 and fig. 1-16).

1. Starter bus - powered by external power or batteries in series. Minimum of 24v before battery start/ 12v during battery start.

2. Battery bus - Can power the paralleling, essential, or start bus.

3. Paralleling bus

In flight, powered by generator(s) {will automatically disconnect with a Dual Gen Fail}. On deck, powered by external power, batteries, or generator(s). Can power all buses except the start bus. Powers the hydraulic pump. Remains powered in Dual Gen Fail condition if in T-39G.

4. DC essential bus

   a. Powered by paralleling bus.

   b. Powered by batteries if dual gen failure in flight.

5. DC secondary bus

   a. Energized by the paralleling bus on deck, only if both DC generators are online or external power is applied.

   b. In flight, powered by paralleling bus with either DC generator online (no power if dual gen failure).

6. T-39N only - DC mission bus A and B (DC MISSION PWR switch)

   a. Powered by DC essential bus.

   b. Bus A supplies power to the radar inverters and mission essential equipment. Should bus A overload, the Mission Bus A circuit breaker will trip causing the MISSION A FAIL annunciator light to illuminate.

   c. Bus B powers cabin non-essential loads. Note: see fig 1-17(sheet 10 of 10 for BUS A/B power distribution)

   d. Should either generator fail with both buses energized normally, load shed of both A & B buses will occur. Moving the Mission Power Switch to EMER restores power to bus A and radar only. Should both generators fail, load shed of both buses will occur and they will remain shed.

C. DC power controls

1. Electrical Master switches: guarded ON, allows the battery switch to function and the generators to power the paralleling bus.

2. Battery switch:

   a. ON - connects the battery bus to paralleling bus (allows automatic transfer to ESS bus in the event of a dual gen fail; parallel bus taken off line).

b. ESS - manual connection of batteries to essential bus with dual gen fail (only to be selected if auto transfer fails).

c. OFF - disconnects battery bus from paralleling bus.

3. DC gen switches: generators online at 40% rpm provided the Electrical Master is ON, Fire Pull handle is in, or the Engine Start (ground or air) is off. Positions are ON-OFF-RESET.

4. DC MISSION PWR switch:

a. NORM - power to DC mission bus A and B from essential bus.

b. EMER - power to DC mission bus A if single gen failed.

c. OFF - removes power from both DC mission bus A and B.

5. Battery isolation switches:

a. OVERRIDE - Used during 2nd engine start with battery switch off (allows the battery to start the 2nd engine while the 1st engine generator powers the paralleling bus).

b. ISOL - Removes the respective battery from the battery bus via the isolation relay.

c. NORM - Normal connection of batteries to battery bus.

D. DC power indicators

1. Voltmeter - shows essential bus voltage unless PUSH LH/RH GEN VOLT is depressed.

2. Loadmeter - LH/RH, should be within 1 division (after engine start, up to 30 min allowed to stabilize).

Caution lights – single DC GEN OFF - reset (Gen will kick off line btwn 31-33v)
LH/RH DC GEN HOT - gen OFF (155 C)
BATT HOT - Battery switch off (150 F) ESS BUS CB OUT - extra loads OFF
MISSION A or B FAIL - select EMER if the radar is desired.

E. Single DC Generator Ops

1. Max load on operating generator = .8 - sea lvl to 30,000'

.5 - 30,000' to 40,000'

2. Maintain .65M for cooling, max op altitude = 40,000

F. AC power source

1. Main or Stdby inverter (1500 or 1250 v-a, 115 $\pm$ 8 volts)

2. Instrument inverter (1000 v-a, 115 $\pm$ 8 volts)

3. Six mission inverters (provides power for mission AC bus) Note: inverters change DC to AC

4. Engine-driven AC generators for forward windshield heat only.

G. AC power distribution (FO-8)

1. AC secondary bus: powered by either the main or stby inverter.

2. AC primary bus: powered by AC secondary bus or directly from the instrument inverter if both main and stby fail.

3. Mission AC bus: powered from DC mission bus A (radar bus); AC MISSION PWR switch ON/OFF.

4. #1 - 26 vac bus powered by AC primary bus (oil/hyd/oxy ind).

5. #2 - 26 vac bus powered by AC secondary bus (ADF/alt altr).

6. Four 5 vac indirect light busses powered by AC secondary bus.

H. AC power controls

1. Inverter switch

   a. MAIN - essential bus powers main, standby, and instrument inverter, in that order. (automatic fail down mode available)

   b. STBY - essential bus powers stby inv only; no faildown mode.

   c. OFF - no ess bus power (no AC power available).

   d. MAIN INV FAIL light, STBY INV FAIL light.

2. Only instrument inverter available with battery power only.

I. AC power indicators

1. AC voltmeter: shows voltage of operating inverter.

2. AC INST PWR OFF light - Total loss of AC power, must be accompanied by MAIN and STBY INV FAIL lights .

3. FT {fault) lights - phase A,B, C (two inverters per phase) - will illuminate if any of the mission inverters in its particular phase fails; loss of two inverter on the same phase will shut down the radar (the only way to tell if two inverters in one phase have failed is that the radar will fail).

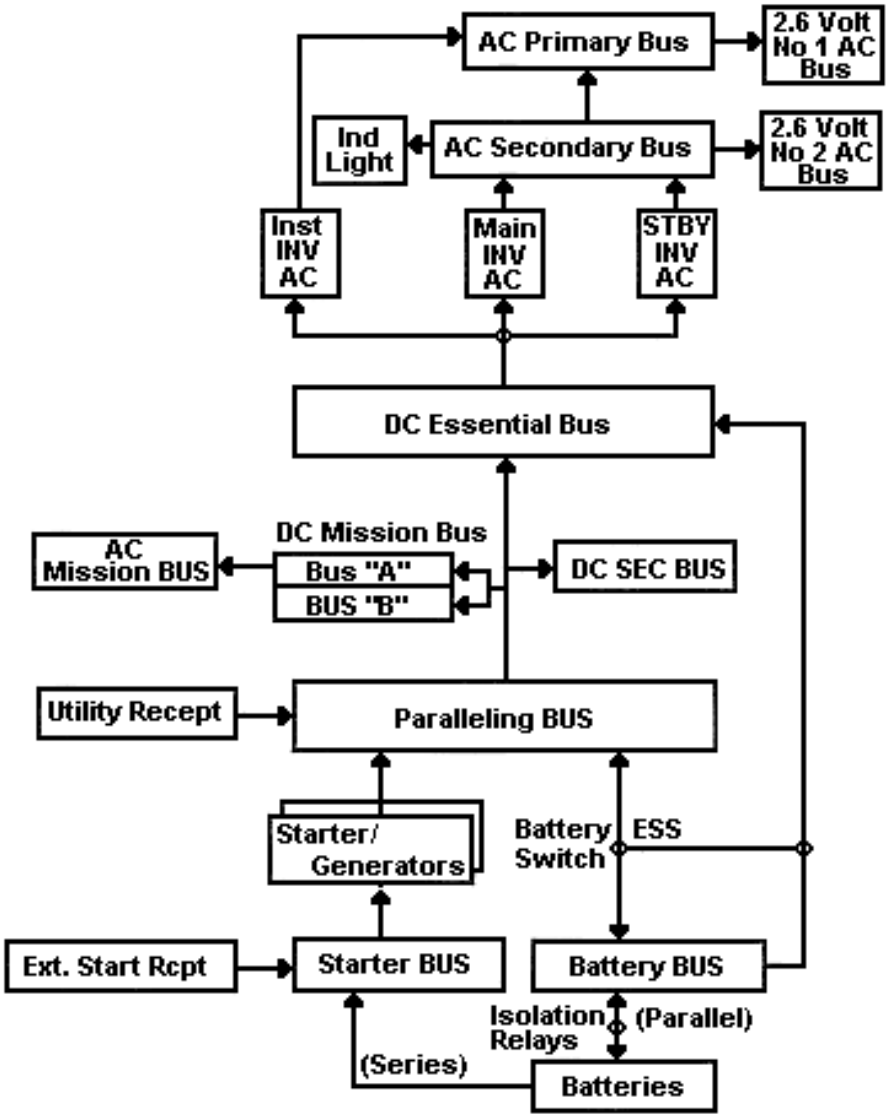
AC Primary Bus
2.6 Volt No 1 AC Bus
Ind Light
AC Secondary Bus
2.6 Volt No 2 AC Bus
Inst INV AC
Main INV AC
STBY INV AC
DC Essential Bus
DC Mission Bus
AC Mission BUS
Bus "A"
BUS "B"
DC SEC BUS
Utility Recept
Paralleling BUS
Starter/ Generators
Battery Switch
ESS
Ext. Start Rcpt
Starter BUS
Battery BUS
Isolation Relays
(Parallel)
(Series)
Batteries

Figure 3-1

UNIT THREE REVIEW QUESTIONS

1. External power requirements are:

   Utility: ____ volts _____ amps
   Start: ____ volts _____ amps

2. The battery bus is connected to two _____ volt batteries through _____.

3. The Starter bus is powered either by _____ connected in (series/parallel) or by _____

4. The Starter bus supplies power to the starter-generators and engine instruments necessary to monitor the start. (TRUE/FALSE)

5. The Paralleling bus is powered by the _____ bus, the _____ or _____.

6. The DC Essential bus is normally powered by the _____ bus; in the event of a dual generator failure in flight, it receives power directly from the_____ bus.

7. The ESS position of the battery switch should be selected only if _____.

8. With a single generator failure, Mission DC bus(es) will be shed. Mission bus(es) may be regained by placing the mission bus switch to EMER. (TRUE/FALSE)

9. On deck, with a single generator operating, the Secondary bus will remain unpowered. (TRUE/FALSE)

10. Aircraft AC power is supplied by two volt-amp inverters or one _____ volt-amp inverter, which in turn receive DC power from the _____ bus.

11. If both the MAIN and STANDBY inverters fail, AC power is available from the _____ inverter to the _____ bus only.

12. AC power from the MAIN or STANDBY inverters power the AC _____ bus, which in turn powers the _____ bus, one 26 VAC bus and four 5 VAC buses.

13. In the event of a loss of all AC power, the _____ caution light will illuminate.

14. Mission AC inverters are powered by Mission DC bus. (TRUE/FALSE)

15. A TOTAL of three mission inverters (one in each phase)can fail and the radar will still be available. (TRUE/FALSE)

16. Battery temperature should be monitored in flight; if the temperature exceeds 120° F, it will be indicated by _____.

17. If the battery temperature exceeds _____ F, the battery shall be isolated.

18. If battery temperature exceeds 150° F, the _____ and the _____ caution light will illuminate.

19. Left and right DC loadmeters should show generator output balanced within _____ of each other.

20. If the DC GEN OFF caution light illuminates, check the _____ to determine which generator is not operating. Hold the generator switch at RESET and push the LH/RH GEN _____ VOLT buttons while checking the _____.

21. With a single generator failure in flight, the loadmeter for the operating generator should be below a maximum of _____ (sea level to 30,000 ft) _____ (30,000 to 40,000 ft)

THIS PAGE INTENTIONALLY LEFT BLANK

UNIT FOUR: HYDRAULIC SYSTEMS

REFERENCE: T-39 NATOPS MANUAL

ENABLING OBJECTIVE:

A-1. Locate and operate T-39N/G aircraft systems, given a mission in a T-39 in accordance with NATOPS.

ENABLING STEP:

A.1.5. Recall the basic descriptions, related and operating limitations of the T-39N/G hydraulic systems.

NATOPS FOUR: HYDRAULIC SYSTEMS

A. Main hydraulic system (3,000 psi system)

1. Components:
   a. Electric motor driven pump (paralleling bus)
   b. Hydraulic reservoir (2 gal.)
   c. Accumulator (1500 $\pm$ 50 psi nitrogen pre-charge)
   d. Hydraulic pump switch
   e. Cockpit-pressure gauge (2650-3200 psi)
2. Operates landing gear, main gear doors, speedbrake, wheelbrakes/anti-skid, thrust reversers and NWS.

B. Controls and indicators

1. Switch positions
   a. MANUAL - pump runs continuously; 1 minute time limit. Spring-loaded to AUTO.
   b. AUTO - pump ON when pressure < 2700 psi until pressure returns to 3000 psi.
   c. OFF&RESET - OFF position/resets power if tripped by overtime or overcurrent.
2. HYD PRESS PWR OFF LIGHT
   a. Pressure < 2700 for more than 1 minute.
   b. Switch is in OFF&RESET position.
   c. Pump CB out (2A3 & 2A4).

d. Over temp.

e. Over time (pump on longer than 1 minute).

f. Over current.

g. Pressure < 2000 ± 100 psi. Only time that the master caution light does not come on with an annunciator light. Will see in connection w/ speedbrake operation.

3. Hydraulic fail audible warning (on deck ONLY)

a. Weight on wheels and either Engine Master ON.

b. Pressure < 2000 ± 100 psi (Horn off when > 2600 ± 100 psi).

c. Pump switch OFF&RESET.

d. Pump CB out.

C. Aux hydraulic system

1. Pressure 2800-3600 psi (aux accumulator 1500 ± 50 nitrogen pre-charge).

2. Powers speedbrake, wheelbrakes/anti-skid and NWS.

3. AUX SYS switch - select ON just before hydraulics are needed if main system fails. (allows stored pressure fluid to be used from aux accumulator)

4. Hydraulic pressure will bleed down with each actuation of speedbrakes, wheelbrakes, and nosewheel steering.

5. Recommend turning anti-skid OFF prior to landing. Recommend not using speedbrake.

D. Landing gear

1. Electrically controlled, hydraulically actuated

a. Steady-red light in handle when one or more gear do not correspond to gear handle position.

b. Flashing red light in handle when gear is not down & locked and the conditions in paragraph D.5 are met.

2. 180 KIAS & 0 - 2g = operating limits

3. Landing gear override button

a. Allows gear handle to be raised with weight on wheels and hyd./elec. power available. (Normally, weight on wheels sensing switch prevents gear handle from being raised with weight on wheels).

b. Can be used on a single eng climb after take-off with a faulty weight on wheels switch.

4. Emergency T-handle allows gear to freefall. Do not roll out over arresting gear because main gear doors will be open.

4-2 HYDRAULIC SYSTEMS

5. Gear warning horn - flashing red light in handle if
   a. Airspeed < 140 KIAS (± 10).
   b. Either engine < 95%.
   c. Altitude < 12000' (±600') MSL (horn can be silenced with the above parameters).
   d. Any time flaps are beyond 80%; horn CANNOT be silenced.
6. Landing gear downlock and reset button. Resets gear sequencing after emergency gear extension. (allows for normal raising of gear)

E. Nosewheel steering

1. Electrically controlled by button on yoke (main only); hydraulically actuated with either hydraulic system.
2. Rudder pedals steer +/- 45 degrees.
3. Either MAIN or STDBY steering - center pedestal
   a. In MAIN, auto transfer to STDBY if MAIN fails.
   b. In STDBY, yoke button inop; MAIN STEER FAIL light.
   c. Free castering after a standby failure can only be accomplished by selecting MAIN.
   d. Never land with STDBY selected because nose wheel will be canted with rudder movement.
   e. NOSE STEER TRAIL light if main/stdby failed (use differential braking).
   f. NWS light on if either main/stdby engaged.
4. Towing aircraft: close main cabin door, disconnect cannon plug in nose, engage gustlock, turn anti-skid OFF.

F. Wheelbrake system

1. Receives pressure from main/aux or emergency brake system.
2. Pressure is metered down to 1800 psi (from main or aux).
3. Emergency brake T-handle operates brakes through independent hydraulic lines.
4. Use aux hydraulics or emer brakes only to clear the runway (tow back to line).
5. Anti-skid
   a. Inoperative below 10 kts.
   b. Not available using emer brakes.
   c. Powered by main or aux hyd (not recommended in aux).
   d. ANTI-SKID BRAKE FAIL, light.

G. Speedbrake

1. Electrically controlled. Hydraulically actuated.
2. Switch on left throttle.
3. Single panel on bottom of A/C.
4. No airspeed limit; 3g-max.
5. DUMP switch - if hydraulics fail and speedbrake switch OFF, will relieve pressure holding the brake out and allow it to trail. Can be reset for normal operation.
6. Do not roll over arresting gear with SB out (DUMP switch in DUMP position).
7. Speedbrake does have intermediate positions.
8. SPEEDBRAKE OPEN light if either throttle > 95% rpm; speedbrake will NOT close automatically with throttle advancement.

H. Thrust reverser review (Thrust reverser accumulator 900 $\pm$ 50 psi)

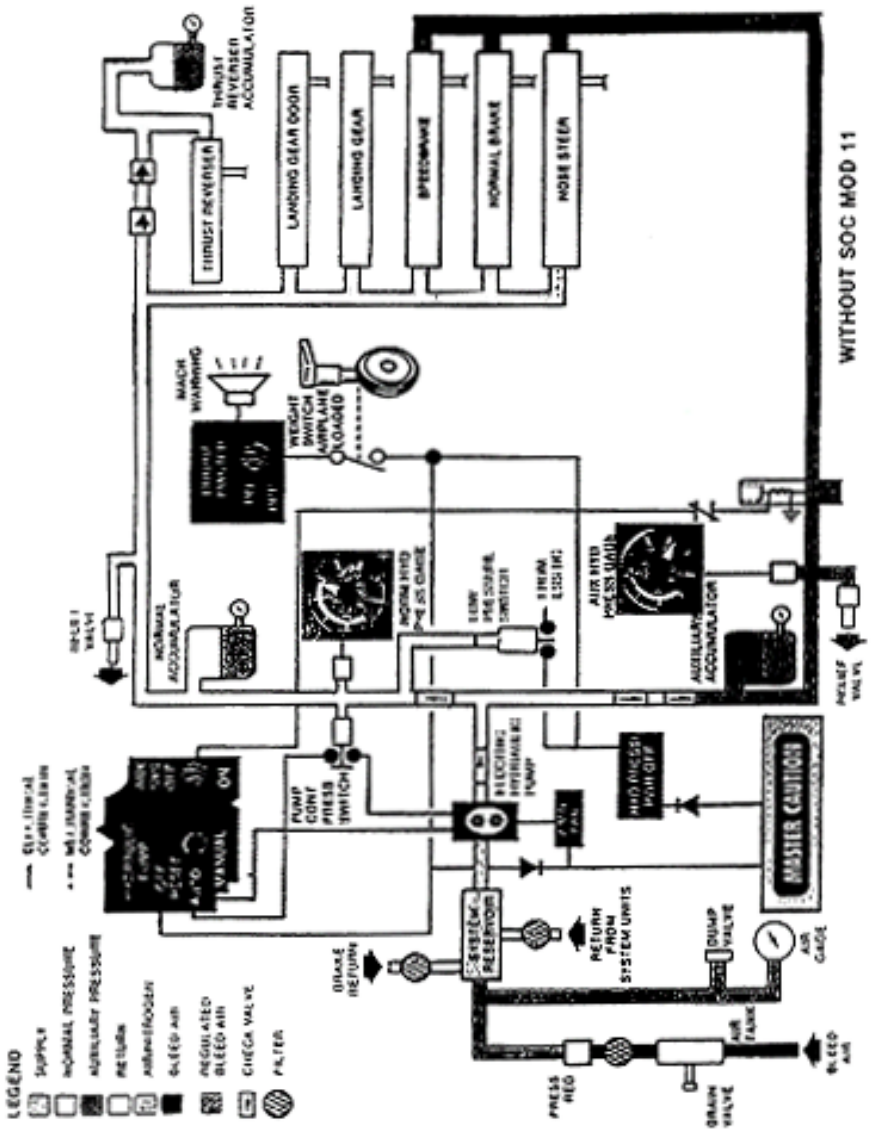
WITHOUT SOC MOD 11
THRUST REVERSER ACCUMULATOR
THRUST REVERSER
LANDING GEAR DOOR
LANDING GEAR
SPEEDBRAKE
NORMAL BRAKE
NOSE STEER
MACH WARNING
WEIGHT SWITCH AIRPLANE LOADED
NORMAL ACCUMULATOR
NORMAL HYD PRESS GAUGE
LOW PRESSURE SWITCH
SHUTOFF VALVE
AUX HYD PRESS GAUGE
AUXILIARY ACCUMULATOR
RELIEF VALVE
PUMP CONT PRESS SWITCH
ELECTRIC HYDRAULIC PUMP
HYD PRESS SHUTOFF
MASTER CAUTION
SYSTEM RESERVOIR
RETURN FROM SYSTEM UNITS
DUMP VALVE
AIR GAUGE
DRAIN RETURN
PRESS REG
DRAIN VALVE
AIR TANK
BLEED AIR
LEGEND
SUPPLY
NORMAL PRESSURE
AUXILIARY PRESSURE
RETURN
ATMOSPHERE
BLEED AIR
REGULATED BLEED AIR
CHECK VALVE
FILTER

Figure 4-1

UNIT FOUR REVIEW QUESTIONS

1. The hydraulic reservoir is filled to _____ gallons.

2. The HYD PRESS PWR OFF caution light will illuminate if the fluid pressure drops below _____ psi or is below _____ psi for more than one minute.

3. Hydraulic pressure is provided by positive displacement engine driven pumps mounted on each accessory gearbox. (TRUE/FALSE)

4. The landing gear is _____ controlled and _____ actuated.

5. During normal gear extension, a red light in the gear handle flashes to indicate one or more gear not down and locked. (TRUE/FALSE)

6. The pilot/copilot headset gear warning signal will sound if

   Either throttle below _____ % rpm
   Airspeed below _____ KIAS
   Altitude below _____ MSL
   and the landing gear is not down and locked. It can/cannot be silenced by the horn cutout button.

7. The gear warning horn will sound if the gears are not down and locked and the flaps _____. It can/cannot be silenced by the horn cutout button.

8. A full nitrogen service is _____ psi for normal and auxiliary accumulators and _____ psi for the thrust reverser accumulator.

9. The emergency brake system is totally independent of the aircraft main hydraulic system. (TRUE/FALSE)

10. Brake system pressure is _____ psi maximum.

11. Normal hydraulic system pressure is _____ to _____ psi.

12. Auxiliary hydraulic system pressure is _____ to _____ psi.

13. The auxiliary accumulator can supply hydraulic power to _____, _____ and _____.

14. Fill in the limitations:
    Landing gear _____ KIAS _____ to _____G
    Speedbrake _____ KIAS _____ to _____ G

15. Anti-skid brakes are available above _____ knots.

16. If landing with auxillary hydraulic pressure, the anti-skid brake switch should be _____.

17. If landing with auxillary hydraulic pressure, the thrust reversers will be inoperative. (TRUE/FALSE).

18. Optimum performance from anti-skid brakes is obtained by applying and holding MAXIMUM pressure. (TRUE/FALSE)

19. In the event the speedbrake fails to retract normally, it can be retracted using _____.

20. The SPEEDBRAKE OPEN caution light illuminates if either throttle is above 95% and the speedbrake is not retracted. (TRUE/FALSE)

21. For gear extension, the steady red light in the gear handle will remain illuminated until all three wheels are down and locked and the inner gear doors are up and locked. (TRUE/FALSE)

22. Hydraulic power is available with DC essential power. (TRUE/FALSE)

THIS PAGE INTENTIONALLY LEFT BLANK

UNIT FIVE: FLIGHT CONTROLS

REFERENCE: T-39 NATOPS MANUAL

ENABLING OBJECTIVE:

A.1 Locate and operate T-39N/G aircraft systems, given a mission in a T-39 in accordance with NATOPS.

ENABLING STEP:

A.1.6 Recall the basic description, related and operating limitations of the T-39N/G flight control systems.

NATOPS FIVE: FLIGHT CONTROLS

A. Mechanical elevators, ailerons, rudder.

1. Gustlock - locks the elevators, ailerons, and rudder. Will also prevent throttle advancement beyond idle.

B. Trim

1. Pitch (horizontal stabilizer), roll (tab on left aileron), yaw (rudder tab).
2. Controlled by 3-position switch below pilot instrument panel:
   a. NORM: 5-position switch on pilot/co-pilot yoke, controls NORMAL pitch/roll trim, switch on center pedestal controls rudder trim.
   b. OFF: No trim available.
   c. ALT: Trim using alternate trim switches in front of pilot's right knee; used for runaway trim condition or if normal system fails.
3. Trim indicators on center instrument panel. NORMAL T/O setting: 0 (aileron), 4 UP (elevator), 0 (rudder).
4. Autopilot will trim for roll or yaw with switch in NORM, ALT, or OFF. Can only trim in pitch if NORM (ALT HOLD).
5. A/P TRIM FAIL light ON if trim attempted with autopilot coupled.

C. Flaps

1. Electrically controlled and actuated (two actuators).
2. Flaps interconnected by a flexible shaft.

3. Movement is available at a reduced rate if one actuator fails.
4. Handle on center pedestal
   a. UP - for T/O and after touchdown to increase weight on wheels for brake effectiveness.
   b. HOLD - allows for intermediate positions; approach flaps = 66%.
   c. DOWN - 25 degrees; 180 KIAS max; 0-2g.
5. Flap position indicator on center instrument panel.
6. Recommended no flap landing for x-wind > 25 kts.
7. Increase V_{ref} by 10 kts for no flaps landing (same as single eng.)

D. Slats

1. Operate as a function of airspeed and AOA.
2. Begin to open as aircraft decelerates through 180 KIAS.
3. Increase V_{ref} by 15 kts if stuck slat.

E. Stall warning

1. Stick shakers at 24 units AOA.
2. Stall warning transducers under center of right wing, just behind leading edge.
3. Operate -

Below 16000:	107% of STALL speed
Above 42000:	110% of FLAMEOUT (180)
16K - 42K:	whichever is higher

4. Automatic power to both igniters (starter button lights-starter duty cycle applies).

F. Prohibited maneuvers

1. Pitch greater than 60 degrees up or down.
2. Lateral deflections > 1/2 throw above 300 KIAS (225KIAS if 2 adjacent or more than 3 total vortex generators are missing).
3. Spins.
4. Operation in stall warning buffet ABOVE 25K.
5. Yaw maneuvers in other than lg flight.

UNIT FIVE REVIEW QUESTIONS

1. Normal trimming is accomplished by use of the trim select and normal trim switches, co-located on the pilot's trim control panel. (TRUE/FALSE).

2. Flap limitations are _____ KIAS and _____ G's.

3. No flap landings are recommended for crosswinds in excess of _____ knots. In any case a no flap landing requires that V_{ref} be increased by _____ knots.

4. With an inoperative or stuck slat, V_{ref} should be increased by _____ knots.

5. Activation of the stall warning system provides electrical power to the continuous or #3 igniter only. (TRUE/FALSE).

6. List the five prohibited maneuvers in the T-39:

a. _____

b. _____

c. _____

d. _____

e. _____

THIS PAGE INTENTIONALLY LEFT BLANK

UNIT SIX: ANTI-ICE/DE-ICE SYSTEMS

REFERENCE: T-39 NATOPS MANUAL

ENABLING OBJECTIVE:

A.1 Locate and operate T-39N/G aircraft systems, given a mission in a T-39 in accordance with NATOPS.

ENABLING STEP:

A.1.7 Recall the basic description, related systems, and operating limitations of the T-39N/G anti-ice/de-ice system.

NATOPS SIX: ANTI-ICE/DE-ICE SYSTEMS

A. Activate anti-ice system when OAT is +5 to - 20C and in visible moisture.

B. Sources of anti-ice

1. Engine compressor bleed air (9th stage) is provided to the following:
   a. Engine inlet duct.
   b. Engine flow straightener vanes.
   c. Engine guide vanes.
   d. Engine nose bullet.
2. Electrical heat is provided to the following:
   a. Pitot tubes.
   b. Stall warning vanes.
   c. EPR probes.
   d. Ram air inlet.
   e. AOA probe.
   f. Windshield.
   g. AC and DC generator inlets.

C. Anti-ice controls

1. ENGINE & RAM AIR INLET switch.
   a. Opens each engine's ANTI-ICE SHUTOFF VALVE, providing bleed air to each engine. (ENG inlet, flow straighteners, inlet guide vanes, and bullet nose). With a TOTAL electrical failure, only inlet guide vanes and bullet nose will be anti-iced.
   b. Provides electric heat to AC/DC generator inlets and ram air inlet on vertical tail.
   c. If either forward windshield heater is inop, and window is unheated, do not exceed 250 KIAS below 10,000'.

D. De-icing system

1. Removes accumulated ice on:
   a. the wing slats
   b. under slat surfaces and leading edge of wing roots
   c. vertical and horizontal tail leading edges.
2. Electrically controlled, pneumatically operated with engine bleed air.
3. Automatic operation - PNEU BOOTS LT/HVY/OFF switch.
   a. Each set-of boots (wing, slat, empennage) is pressurized for 5 seconds, with a dwell time of 45 seconds (HVY) or 165 seconds (LT).
   b. WING/SLATS/EMP lights will be on.
   c. Automatic operation is powered by DC SECONDARY BUS.
   d. Can be inflated on deck to check operation.
4. Manual operation - depress each WING/SLATS/EMP light for 5 seconds, repeating as necessary.
   a. Manual operation is powered by DC ESSENTIAL BUS.
5. For most effective operation, use pneumatic boots when ice thickness reaches 1/4 inch.
6. For de-icing operations (pneumatic boots) engine RPM must be > 75%.
7. Ice check lights

E. Fuel Heater

1. Used when FUEL FILTER BLOCK light illuminates (possible ice crystals) or when fuel temperature drops below 0 C to warm fuel filter. Fuel heater is in the engine fuel pump, upstream of the fuel filter, NOT in fuel tank (fuel temp probe in left fuel tank).

2. One minute time limit for every 30 minutes to prevent oil overheat.

3. NOT to be used on takeoff or landings.

F. With engine anti-ice systems on, use appropriate charts for computing Max continuous, climb, Cruise, and Reverse thrust EPR values. Reduce Wave Off EPR by 10, per the chart notes.

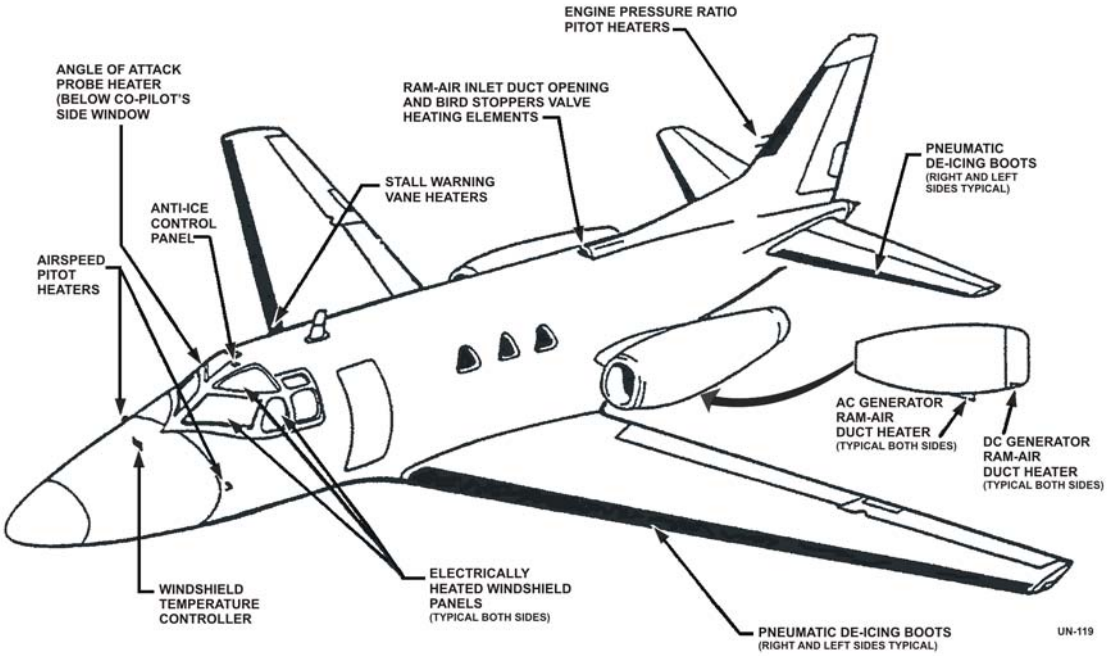

Figure 6-1
Airframe Anti-Icing Systems (un-119)

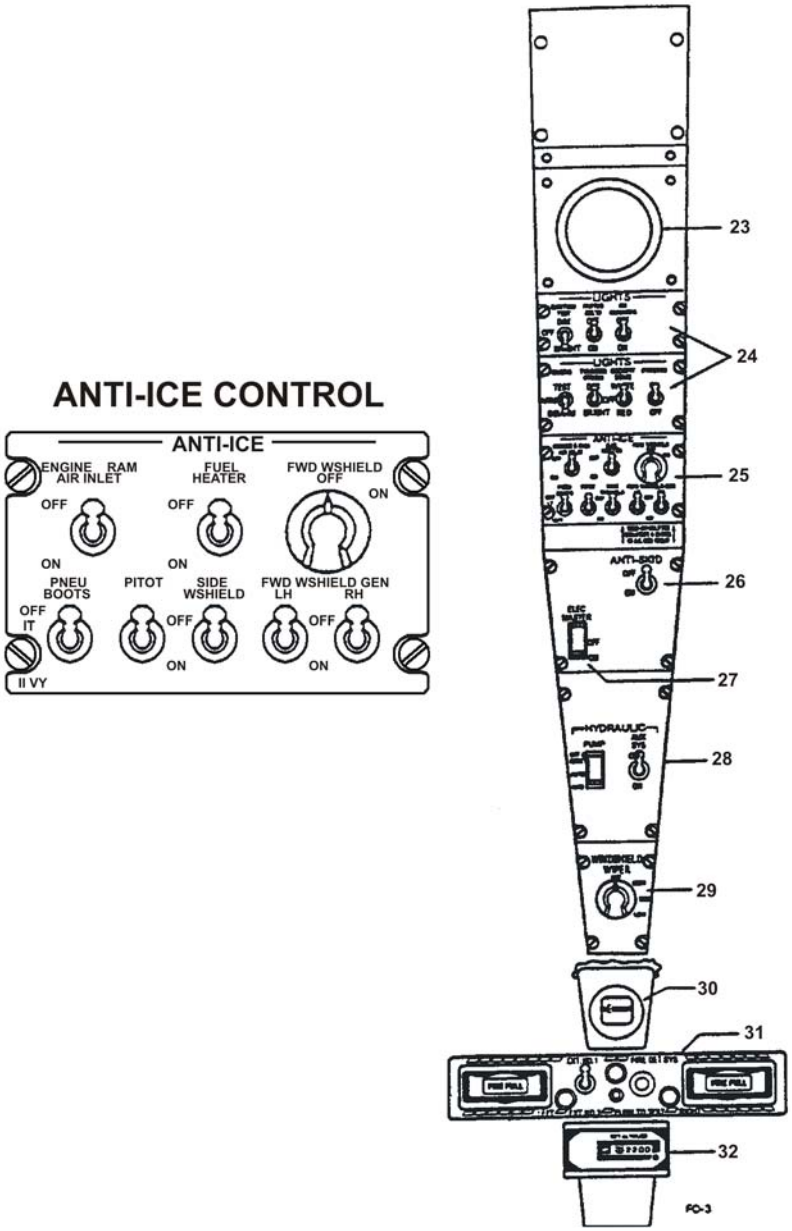
ANTI-ICE CONTROL
ANTI-ICE
ENGINE AIR INLET
RAM
FUEL HEATER
FWD WSHIELD
OFF
ON
PNEU BOOTS
PITOT
SIDE WSHIELD
FWD WSHIELD GEN
LH
RH
23
24
25
26
27
28
29
30
31
32

Figure 6-2

UNIT SIX REVIEW QUESTIONS

1. Anti-icing systems shall be turned on when operating in _____ with a temperature range of _____ to _____°C.

2. A minimum of _____ EPR is required to operate the engine anti-ice system.

3. The engine ignition switch should be placed in NORMAL when the anti-ice systems are turned on. (TRUE/FALSE)

4. Placing the ENGINE & RAM AIR INLETS switch ON opens the bleed air shut-off valves for engine anti-icing and provides power to electrically heat the _____ and _____.

5. With weight off the wheels, electrical anti-icing is, automatically provided to the _____and_____.

6. The stall warning vanes will be heated in flight as long as power is available to the bus. (TRUE/FALSE)

7. The AOA heater will operate in flight with only one generator on line. (TRUE/FALSE)

8. Electrical power to anti-ice and bird proof the forward windshields is controlled by the_____switches and the _____ switch.

9. The SIDE WINDSHIELD switch sends DC secondary bus power to heat the _____ and _____ and both _____.

10. The temperature of all heated windows except the _____ is monitored for the WINDSHIELD HOT caution light.

11. While taxiing for takeoff, you get a LH AC GEN OFF caution light. No corrective action is necessary, since output is limited below 58% rpm. (TRUE/FALSE)

12. If either windscreen is unheated, airspeed is limited to _____ KIAS below 10000 feet.

13. The airfoil de-icing system is designed to be used BEFORE ice has accumulated on the leading edges of the wing and empennage. (TRUE/FALSE)

14. When the PNEU BOOTS switch is selected to HVY, the dwell time between boot inflation is _____ seconds.

15. Operation of the de-icing system can be monitored by _____.

16. If manual inflation of the de-ice boots is desired, it can be accomplished by _____.

17. Best use of the de-ice boots is achieved when the ice reaches a thickness of _____ inch (es).

18. In the event of dual generator failure, the de-ice boots will function, but only in the automatic mode. (TRUE/FALSE)

19. When the PNEU BOOTS switch is selected to LT it is possible that boot in occur for up to _____ sec's.

UNIT SEVEN: ENVIRONMENTAL SYSTEMS

REFERENCE: T-39 NATOPS MANUAL

ENABLING OBJECTIVE:

A.1 Locate and operate T-39N/G aircraft systems, given a mission in a T-39 in accordance with NATOPS.

ENABLING STEP:

A.1.8 Recall the basic description, related systems, and operating limitations of the T-39N/G environmental systems.

NATOPS SEVEN: ENVIRONMENTAL SYSTEMS

A. Air conditioning (primary cooling system)

1. 9th stage bleed air duct is split into three branches, cooled, hot, and door press.
   a. Cooled, through heat exchanger (cooled by ram air), then through expansion turbine.
   b. Mixing valve controlled by rheostat or toggle (to regulate temp).
   c. Anti-icing valve to prevent icing in water separator (keeps conditioned air above 0 C).
2. Bleed air shutoff valve on each engine stops airflow if leak is suspected (CABIN AIR SELECT switch)
3. Either engine can provide full system capability.
4. Aux air conditioner - main purpose is ground cooling and augments primary system.
   a. MODE switch - air conditioner or circulation.
   b. FWD EVAP/AFT EVAP - cockpit/cabin evaporators.
   c. Should be OFF by 10K; shall be secured at FL 180 (due to compressor motor arcing).
   d. Powered by Mission bus B (lost if single gen).
   e. Uses Freon, NOT bleed air.

B. Pressurization

1. Cabin pressure regulator controls pressurization.
   a. Pressure regulator inop from SL to 8000 MSL (unpressurized).
   b. Regulator maintains 8000' cabin altitude above the 8000' pressure altitude to a maximum of 8.8 cabin pressure differential.

c. Aircraft ceiling is 45,000' MSL.

2. Dump valve prevents cabin pressure from exceeding 9.1 ± .1 above outside pressure.

3. Cabin pressure dumps with weight on wheels.

4. AFT FUS HOT light if bleed air leak (135C).

-select RAM below 15K
-select EMER PRESS above 15K

5. CABIN AIR HOT light on if air downstream of mixing valve exceeds 130C - select MAN COLD

NOTE: *Expect this light if EMER PRESS is selected*

6. Door seal will remain pressurized with dual gen fail (DC Essential power available); cabin pressure will dump if TOTAL electrical failure.

7. Emergency pressurization from unconditioned RH bleed air; INOP ON DECK or if RH FIRE handle pulled. Control air temperature with throttle position.

8. CABIN AIR SELECT switch controls bleed air valves

a. OFF - closes both shutoff valves.

b. BOTH ENG - Both bleed air shutoff valves open (normal position).

c. LH/RH ENG - single engine operations or contamination suspected.

d. RAM - closes both shutoff valves and opens ram air supply valve.

e. AM AND DUMP - same as RAM but dumps cabin pressure as well.

f. EMER PRESS - closes both shutoff valves and opens the emergency valve from RH engine.

NOTE: *In RAM or OFF, pressure will bleed off; RAM/DUMP = immediate depressurization.*

9. CABIN TEMP switch/ AUTO CONTROL rheostat

a. OFF/AUTO/MAN HOT/MAN COLD (spring-loaded to OFF from MAN HOT or MAN COLD).

b. Rheostat only operative if BOTH or LH/RH ENG is selected on CABIN AIR SELECT switch.

c. Auto temp range of 60-80F

10. CABIN PRESS FAIL red light if cabin altitude exceeds 10,000 ± 400 feet. Will also get a FASTEN SEAT BELT light.

11. The following warnings occur at 13,500 ± 500:
    a. DON OXYGEN MASK light on.
    b. NO SMOKING light on.
    c. Oxygen warning horn on.

C. Oxygen system

1. Two 77.9 cubic-foot oxygen cylinders located in cabin. (Aircraft specific)
    a. Check ON during preflight (normally safety wired ON).
    b. Normal servicing 1500-1800 psi.
    c. Green blowout disk aft of entry door if pressure exceeds 2500-2700 psi.
    d. All occupants shall use oxygen above FL 410.
    e. Pilot/Copilot have oxygen available at all times provided the oxygen cylinders are ON and masks are plugged in (no electrical power needed). For other stations, switch on oxygen control panel must be in MAN or AUTO.
2. Oxygen regulators
    a. Masks at each station.
    b. Diluter-demand regulators
    c. EMER/100%/NORM.
    d. Flow indicators (green/orange band). Green = Oxygen available.

        * In the event oxygen masks are donned:

        (1) Deselect VOX mic (use intercom button/toggle to talk).

        (2) Select OXY mask vice BOOM (for mic).

        (3) Front seats select Speaker (back seats do not have this available, speakers in cabin are for intercom P.A. system)
3. Passenger Oxygen control panel (pilot's LH console)
    a. Oxygen pressure gauge (1500-1800 psi).
    b. Oxygen warning horn cutout button.
    c. PASSENGER OXYGEN ON red light (press to test) will be on whenever oxygen is available in cabin.
    d. OFF -no flow
        MANUAL - continuous flow
        AUTO - normal position allowing flow if cabin altitude exceeds 13,500 ± 500 MSL.
4. Walkaround bottle located behind co-pilot seat.

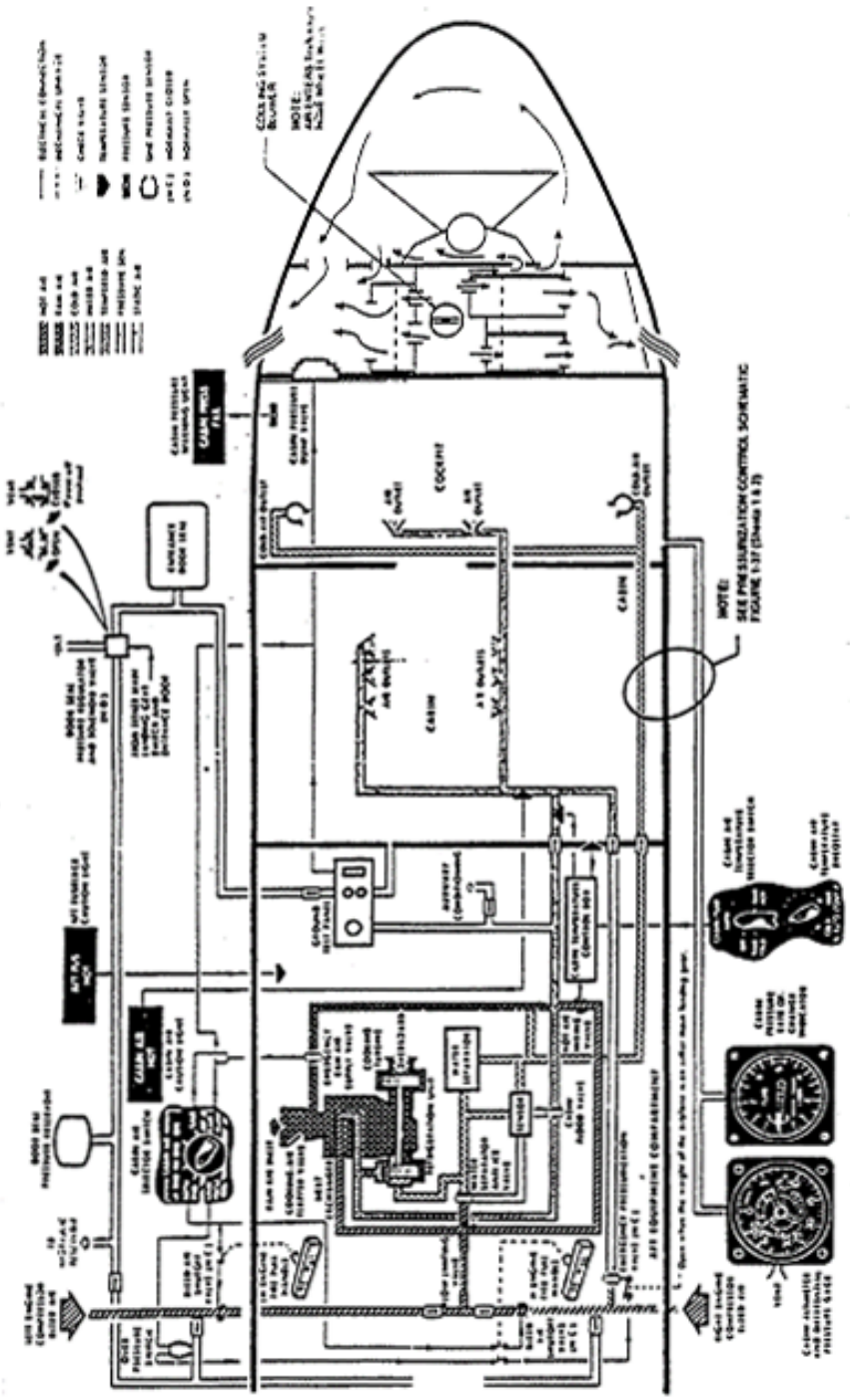

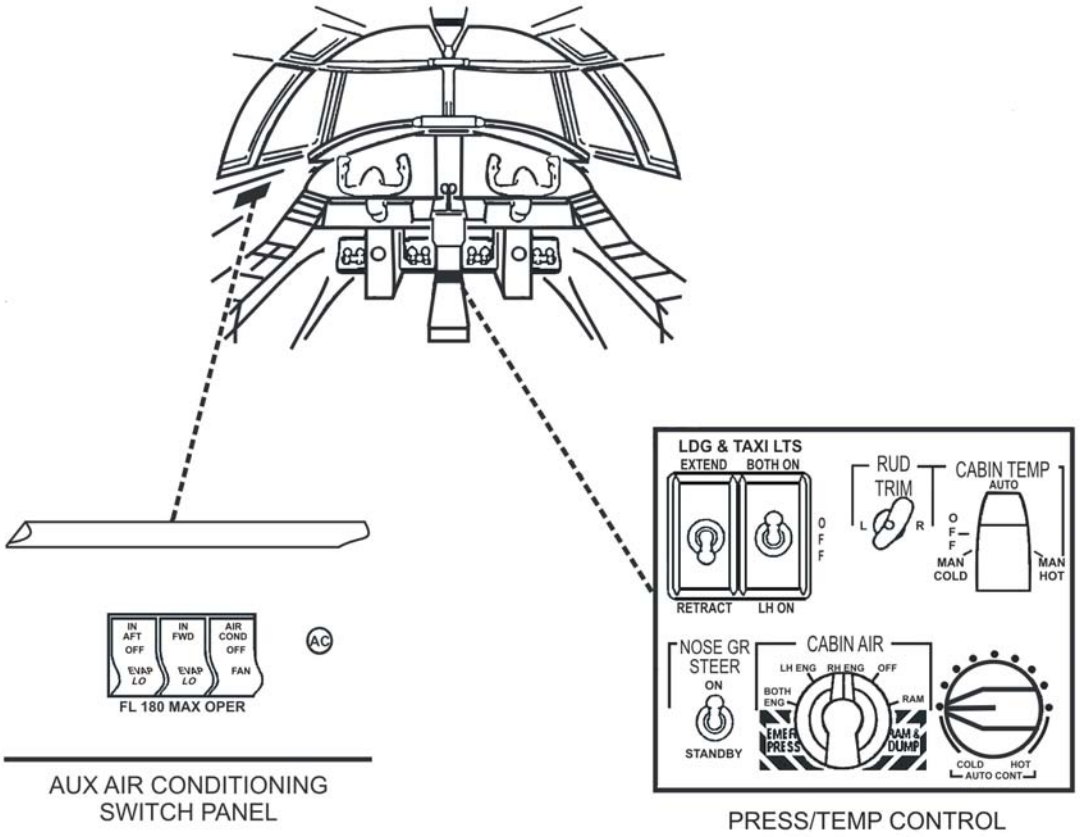
IN AFT OFF EVAP LO
IN FWD EVAP LO
AIR COND OFF FAN
AC
FL 180 MAX OPER
AUX AIR CONDITIONING SWITCH PANEL
LDG & TAXI LTS
EXTEND
BOTH ON
RETRACT
LH ON
OFF
RUD TRIM
L
R
CABIN TEMP
AUTO
OFF
MAN COLD
MAN HOT
NOSE GR STEER
ON
STANDBY
CABIN AIR
LH ENG
RH ENG
OFF
BOTH ENG
RAM
EMERG PRESS
RAM & DUMP
COLD
HOT
AUTO CONT
PRESS/TEMP CONTROL

Figure 7-2

UNIT SEVEN REVIEW

1. The T-39N/G pressurization schedule is:

   Sea level to 8000 ft _____
   8000 ft and above _____

2. Pulling a fire pull handle closes the bleed air shutoff valve for that engine, but the remaining engine can provide enough air for pressurization and air conditioning. (TRUE/FALSE)

3. Selecting EMER PRESS provides unconditioned bleed air from the _____ engine only.

4. Selecting RAM closes the _____ and opens the _____.

5. The _____ position of the CABIN AIR switch is used for smoke and fumes elimination.

6. If the cabin altitude exceeds 10000-± 400 feet, the red _____ warning light will illuminate, along with the _____ sign in the cabin.

7. With cold ambient temperatures, EMER PRESS may be used to rapidly heat the cabin on deck. (TRUE/FALSE)

8. If the cabin altitude exceeds 13500 ± 500 feet, the _____ and _____ signs in the cabin will illuminate. In addition, if the _____ is in AUTO, oxygen will be available to cabin personnel.

9. The normal pressure for the oxygen cylinders, checked on preflight, is _____ to _____ psi.

10. Explain the function of each of the three positions of the pressure regulator on each oxygen mask:

NORM - _____
100% - _____
EMER - _____

11. The oxygen mask incorporates a _____ as a flow indictor, indicating whether oxygen is available or not.

12. If the cabin altitude exceeds _____ feet, the oxygen warning horn will sound. It can be silenced by pressing the _____.

13. The AUTO position of the CABIN TEMP switch works only if the CABIN AIR switch is in _____, _____ or _____.

14. If the cabin pressure regulator fails, the cabin air dump and safety valve will prevent cabin pressure from exceeding _____ psi above outside pressure.
15. The door seal automatically inflates with weight off the wheels, and it will maintain pressure even in the event of a total electrical failure. (TRUE/FALSE)

16. Upon landing, the door seal will automatically_____.

17. The auxiliary air conditioner must be turned off before climbing through _____ feet; normally it will be turned off passing through _____ feet in the CLIMB Checklist.

18. The cabin temperature AUTO control will keep the cabin temperature between _____ and _____°F.

19. If the AUTO cabin temperature control fails to work, the CABIN TEMP switch may be momentarily toggled to _____.

20. If the CABIN AIR HOT caution light illuminates, it indicates _____. Corrective action is: _____.

THIS PAGE INTENTIONALLY LEFT BLANK

UNIT EIGHT: AVIONICS SYSTEMS

REFERENCE: T-39 NATOPS MANUAL

ENABLING OBJECTIVE:

A.1 Locate and operate T-39N/G aircraft systems, given a mission in a T-39 in accordance with NATOPS.

ENABLING STEP:

A.1.9 Recall the basic description of and operation of the T-39N/G's avionics systems.

NATOPS EIGHT: AVIONICS

A. Cockpit lighting

1. Rheostats located on left/right consoles.
2. Inner rheostat for indirect lighting (instrument internal lighting).
3. Outer rheostat for flight instrument floodlights.

B. Radio Control Unit (RCU) (T-39N)

1. Check station ICS placard to select/deselect ICS stations.
2. To talk, select individual stations, VOX MIC, and ST
   a. LED will indicate activation of selected radio/navaid/station/function.
   b. Opens up two way communication between ICS stations.
   c. Conversation in rear only if front stations are deselected (ICS 1,2,&3).

3. For UHF/VHF, left LED for Transmit & Right LED for receive. Due to the programming of this ICS panel, ALL stations must be up T/R on ONE radio, therefore backseaters select INPH on your KEY SEL toggle switch to prevent accidental UHF/VHF transmission.

4. Depress any radio/navaid/ICS button until that function's name appears in the status window and volume adjustments can be made for that individual function, otherwise the volume control on the ICS panel will act as a Master volume control.

5. Monitor radios by depressing blue REC SEL button and selecting a radio while light is flashing. Deselect radio receiver by first pressing blue button again. IT IS POSSIBLE TO DESELECT A RECEIVER ON A RADIO THAT IS ON TRANSMIT/RECEIVE.

6. Red EMG button acts as a RESET in case of power fault. This function also allow the pilot to T/R on VHF and the copilot to T/R on UHF 1, bypassing the RCS in case of malfunction.

7. VOX CANNOT be adjusted.

C. VHF Radio - transfer switch between two frequencies.

D. Transponders - select #1 or 2, STBY/ON/LO, IDENT, ALT RPT (mode "C"), MON.

E. TACAN - check X/Y, switch for Air-Air (DME only) or Air-Ground (azimuth and DME).

F. UHF Radios- OFF/MAINBOTH/ADF, squelch, manual/preset/read.
ADF is UHF/DF, ADF2 needle on EHSI (UBF #1 has priority).
- BOTH (MAIN & monitors GUARD)

G. VOR

1. Two receivers for VOR. Azimuth and DME VOR 1 and azimuth only VOR 2. VOR 1 can be used for ILS azimuth and glideslope. (only 1 VOR in T-39G)

2. Test switch will center CDI bar (set to 360) for VOR, or show 1 dot right/1 dot low for a localizer.

H. ADF

1. Displays only relative bearing to a station.
2. OFF, ANT (no azimuth), ADF (azimuth), TEST (90 degree change in bearing).
3. Transfer switch between 2 selected frequencies.
4. Uses ADF 1 needle on EHSI.

I. Stormscope modes (T-39N)

1. 360 or 120 degrees wx mapping.
2. Checklists.
3. Time/date.

J. Flight instruments

1. Radalt (located on pilot side in T-39G)
   a. 0 to 2500 feet, NO TONES associated with radalt.
   b. Can SET radalt to nearest 1 foot by simultaneously depressing and rotating set knob until desired height is displayed on digital display.

c. Radalt will display AGL altitudes to the nearest 50 feet above 1000 feet and to the nearest 10 feet below 1000 feet.

2. Airspeed indicator

a. Both indicators can use either pitot-static system (pilot's/co-pilot's).

b. Fixed IAS scale / movable Mach scale (controlled by aneroid diaphragm which reacts to static pressure changes as altitude changes).

c. Mach/Airspeed audible tone when max. airspeed is exceeded.
Maximum airspeed - 350 to 365 kts, sea level to 21,500 ft.; .8 Mach above 21,500 ft.

3. Vertical Velocity Indicator (VVI / VSI)

a. " minute to live" rule - If the VSI indicates the same number as the altimeter during a descent, this is a VERY GOOD time to reduce your rate of descent (ie.; never have less than a "minute to live").

b. Either indicator can use either or both static systems.

4. Altimeter

a. The NORM/STBY switch on pilot's altimeter should be on NORM. STBY is not functional in this aircraft (the co-pilot does not have this switch).

b. Transponder MODE C and Altitude Alerter uses PILOT's altimeter.

c. Either altimeter can use either or both static systems.

5. Altitude alerter - 000' to go or when 300' deviation from SET altitude. Tone and ALT SEL light illuminates

6. Flight Director/Attitude indicator/standby (EMERG GYRO) attitude indicator.

a. Pilot's Flight Director is linked up to Auto Pilot (Integrated Flight System) to give:

(1) Pitch, Roll, and Yaw (inclinometer/slip indicator).

(2) Glideslope/ localizer deviation information.

(3) Tapered V-command bar to give roll or pitch commands to pilot via flight computer.

b. Standby attitude gyro

(1) EMER GYRO pushbutton ON.

(2) 4 hour battery if dual gen fail.

(3) If emergency power fails, stby gyro good for 9 minutes minimum.

7. Outside air temperature - pilot or co-pilot side.

8. Clock - stopwatch, elapsed time, 24-hour clock, reset.

9. AOA indicator - 18 units at V_{ref}; 24 units stall warning.
   a. AOA indexers- heads-up display of AOA reference to On-Speed (18 units)
      (1) Green chevron - AOA above 18 units (SLOW).
      (2) Amber donut - AOA at 18 units (ON-Speed).
      (3) Red chevron - AOA below 18 units (FAST).

NOTE: *AOA units are NOT associated with angle of attack in degrees. It is simply an arbitrary number for that particular aircraft.*

10. RMI (pilot only) - single/double needles
    a. Powered by DC essential power.
    b. Single needle ADF(LF/MF) or VOR (NAVI).
    c. Double needle ADF(UIIF DF) or VOR (NAV2).
    d. No TACAN/DME capability.
11. Directional Indicating System (EHSI)/Magnetic compass
    a. COMP 1 (pilots)/COMP 2(copilots). Normally both pilot/co-pilot will fly on COMP2
    b. Compass slave indicator - indicates difference between respective COMP and remote compass transmitter (RCT) on respective wingtip. To manually slave (correct) depress D/G (illuminates green) and depress respective DECR/INCR buttons until COMP is slaved. When complete, depress D/G button again to return to Auto Slave mode.
    c. Magnetic (Standby) Compass only accurate with NO electrical power to aircraft. Compass correction card on center windshield divider and is a correction WITH electrical power on. (Standby compass is INACCURATE ON DECK)

K. Autopilot/Flight Director

1. Provides Altitude Hold, steering with HDG bug (pilot only), automatic radial tracking, autopilot Localizer and ILS approaches.
2. Roll and pitch information to V-Command bars.

L. Electronic HSI

1. HSI, ARC, and MAP buttons choose the mode of display.
2. Single/Double needle buttons
   a. Single needle options - V 1(NAV 1), Al (LF/W ADF), A2(UHF/DF), T 1(TACAN), OFF(deselects needle from display).

b. Double needle options - V2 (NAV2), A2, Al, T1, OFF.

3. HDG knob - turn to move bug or' press to put bug on the nose.

4. CRS knob - turn to move CDI bar or press to center bar to direct course inbound to station SELECTED (see CRS button)

5. CRS button selects VOR 1/2, ILS 1/2, or TACAN for CDI (displays on bottom right) and display DME or TCN(TACAN *DME)* in the top left corner of the EHSI.

6. INT knob on panel adjusts lighting intensity.

7. HSI mode

a. CDI with course in upper right, source on lower right (TCN VOR, etc).

b. HDG bug in magenta.

c. Red fail flags for NAV, HDG, or GS.

d. Vertical deviation indicator for ILS glidescope.

e. DME in upper left and/or lower left.

f. White course deviation dots (5º each dot VOR or TCN, 1.25º for ILS).

g. HSI button depressed three times gives TTG, SPD, DME. (SELECT *DME* ONLY)

8. ARC mode

a. Larger scale of HSI, ± 40º of hdg.

b. Nice to use on TACAN or ILS final.

9. MAP mode - Bird's eye view of a/c and selected navaid.

M. Radar - align inertial nav unit (INU) on deck with Lat/Long.

UNIT EIGHT REVIEW QUESTIONS

1. Hot mike sensitivity is adjustable by pressing and holding the VOX switch on the ICS panel. (TRUE/FALSE)

2. Center instrument panel lights are controlled by rheostats located on the _____.

3. Exterior light controls, with the exception of the strobes, are located _____.

4. The ICS panel allows selection of aircraft warning signals. (TRUE/FALSE)

5. The T-39N/G has one VHF radio, with two frequency selection windows selectable by a transfer switch. (TRUE/FALSE)

6. Either UHF radio may be used for UHF/DF; if ADF is selected in both radios, UHF 2 will have priority. (TRUE/FALSE)

7. The brightness of the UHF radio frequency readout is controlled by a rheostat located _____.

8. The transponder IDENT feature is located on _____.

9. The T-39N has one transponder, with selection for either the top antenna or the bottom antenna. (TRUE/FALSE)

10. The TACAN _____ mode provides azimuth and DME, whereas the mode provides only DME.

11. The T-39N has two VOR's, but only the _____ receivers DME.

12. Pressing the DME HOLD light/switch will illuminate the _____ light. The operator can now select a different VOR frequency for (azimuth/DME) while retaining (azimuth/DME) from the previous navaid.

13. If an ILS localizer frequency is dialed into NAV2, then the marker beacon system from NAV2 will be used. (TRUE/FALSE)

14. The radar altimeter will display AGL altitude to a maximum of feet. Descending below the set DH (will/will not) cause the SEL ALT light to illuminate; it (will/will not) sound the altitude alerter tone in the headset.

15. The radar altimeter shows altitude to the nearest foot below 1000 feet AGL; above 1000 AGL, it reads to the nearest _____ feet.

16. Setting the HAT or HAA for the DH light of the radar altimeter can only be done to the nearest ten feet. (TRUE/FALSE)

17. The clock switch must be placed at RUN in order to get the flight time clock to start. (TRUE/FALSE)

18. The outside air temperature gauge should not be used for computing takeoff or reverse thrust EPR, but should be used for waveoff EPR. (TRUE/FALSE)

19. For normal operation, the copilot EHSI will use heading information from Compass #2. (TRUE/FALSE)

20. Turning the _____ knob of the EHSI control panel will spin the CDI bar and set the desired course in the upper (right/left) of the EHSI. Pressing the center of the knob will _____.

21. Selection of a navaid for the CDI bar controls the distance source in the upper left of the EHSI. Selecting VOR 1 gives _____, VOR 2 gives _____, and TCN 1 gives _____.

22. With the CDI bar set on VOR 1 repeatedly pressing the HSI button will:

    a. Remove the single and double needles from the display.

    b. Change the CDI to display VOR 2 course info.

    c. Cycle between DME, SPD or TTG in lower left.

    d. Automatically sync the CDI to the inbound course.

23. If a needle chosen for display on the EHSI is not receiving valid information, it will

    a. Spin until it locks up.

    b. Flash red and white then disappear.

    c. Lock up at 3 o'clock/9 o'clock.

    d. Not be displayed at all.

24. In the ARC mode, needles are displayed as in the HSI mode. Additionally, there is a digital presentation of the radial (V or TACAN) or bearing inbound (ADF or UHF/DF). (TRUE/FALSE)

25. The ARC mode presents a compass display ± _____degrees from the aircraft heading.

26. The EHSI compass rose will change from magnetic heading to true heading if the MAP mode is displayed. (TRUE/FALSE)

27. The INU switch should always be turned on before the radar power switch. (TRUE/FALSE)

28. The legend in the upper right of the radar displayed indicates when four minutes of INU alignment are complete and the aircraft can taxi. (TRUE/FALSE)

UNIT NINE: EMERGENCY PROCEDURES

REFERENCE: T-39 NATOPS MANUAL

ENABLING OBJECTIVE:

A.1. Locate and operate T-39N/G aircraft systems, given a mission in a T-39 in accordance with NATOPS.

ENABLING STEP:

A.7.1 Recall T-39N/G specified “immediate action” emergency procedures.

NATOPS NINE: EMERGENCY PROCEDURES

A. ABNORMAL ENGINE STARTS

1. Throttle - OFF

B. ENGINE FIRE ON DECK

1. Stop Aircraft
2. Throttles - OFF
3. Fire Pull Handle (affected engine) - PULL
4. Fire Extinguisher Switch - EXT NO. 1

C. ABORT

1. Throttles - IDLE
2. Wheelbrakes - AS REQUIRED
3. Thrust Reverser Switch - ON

D. ENGINE FAILURE/FIRE - FLIGHT CONTINUED

1. When airborne - GEAR UP
2. Climb to Safe Altitude - 400' AGL MINIMUM
3. Throttle (affected engine) - IDLE

(If engine failed or fire light stays on)

4. Throttle (affected engine) - OFF

E. ENGINE FAILURE/FIRE - IN FLIGHT

1. Throttle (affected engine) - IDLE

   (If engine failed or fire light stays on)

2. Throttle (affected engine) - OFF

F ENGINE IDLE HANGUP DURING WAVEOFF

1. Airstart Switch (affected engine) - ON

G. THRUST REVERSER DEPLOYED IN FLIGHT

1. Throttle (affected engine) - IDLE
2. Thrust Reverser Switch - EMERG STOW

H. AFT FUSELAGE OVERHEAT

1. Crew Oxygen Masks - DON/100%
2. Passenger Oxygen Switch - MANUAL (T-39N)
   Emergency Open/Open (T-39G)
3. Cabin Air Selector - Below 15,000’- RAM
   Above 15,000’- EMER PRESS

I. COCKPIT SMOKE AND FUME/FIRE

1. Crew Oxygen Masks - DON/100%
2. Passenger Oxygen Switch - MANUAL (T-39N)
   Emergency Open/Open (T-39G)

J. TOTAL ELECTRICAL POWER FAILURE

1. Crew Oxygen Masks - DON/100%
2. Passenger Oxygen Switch - MANUAL (T-39N)
   Emergency Open/Open (T-39G)

K. GENERATOR HOT

1. Generator Switch (affected generator) - OFF

   If light remains on:

2. Throttle (affected engine) - OFF

L. OIL PRESSURE (BELOW 35 PSI)

If accompanied by an OIL PRESS LOW light:

1. Throttle (affected engine) - OFF

N. EMERGENCY DESCENT

1. Throttles - IDLE
2. Speedbrake - OUT

N. PRESSURIZATION FAILURE

1. Crew Oxygen Masks - DON/100%
2. Passenger Oxygen Switch - MANUAL (T-39N)
   Emergency Open/Open (T-39G)
3. Emergency Descent - BELOW 25,000 FT
4. Cabin Air Selector - EMER PRESS

O. BATTERY HOT

If temp rises above 120ºF

1. Battery isolation switch (if applicable) - ISOL/OFF

If temp rises to 150ºF

2. Battery switch - OFF

CABIN PRESS FAIL	AFT FUS HOT	CABIN AIR HOT
LH AC GEN HOT	DC GEN OFF	RH DC GEN HOT
LH DC GEN HOT	MAIN INV FAIL	RH AC GEN HOT
LH AC GEN OFF	STANDBY INV FAIL	RH AC GEN OFF
BATT HOT	AC INSTR PWR OFF	WINDSHIELD HOT
FUEL PUMP X-ED FAIL		FUEL TANK X-ED FAIL
LH FUEL PRESS LOW	FUEL-SHUT OFF FAIL	RH FUEL PRESS LOW
OIL PRESS LOW	LOW FUEL LEVEL	HYD PRESS PWR OFF
LH ENG DE-ICE FAIL	FUEL SEL SW NOT NORMAL	RH ENG DE-ICE FAIL
LH FUEL HEAT ON	FUEL FILTER BLOCK	RH FUEL HEAT ON
SPEED BRAKE OPEN	DOOR OPEN	MAIN STEER FAIL
ANTI SKID BRAKE FAIL		ESS BUS C/B OUT
	A-P TRIM FAIL	

APPENDIX A – T-39 AIRCRAFT LIMITATIONS

AIRSPEED LIMITATION

Max above 21,500 ..... 0.80 IMN
Max at 21,500 ..... 365 KIAS
Sea level ..... 350 KIAS
Flaps ..... 180 KIAS
Gear ..... 180 KIAS
Ldg/taxi lts down ..... 250 KIAS
Min a/s above 35K ..... 180 KIAS
Min for anti-skid ..... 10 KIAS
Max wshld wipe ..... 180 KIAS
Max below 10K (no wshd beat) ..... 250 KIAS
Max tailwind (start) ..... 10 KIAS
Min control, air (max T/O wt) 115KIAS
Min control, gnd ..... 90 KIAS
Thrust reversers stowed 60KIAS
No flap landing/single engine appr ..... VREF + 10
Hydroplaning ..... 78 (nose)121 (mains)
Slats open ..... 180 KIAS
Slats fail to open ..... VREF + 15
Max x-wind(recommended only) 25KTS
Stick shaker ..... 107% X Vstall
Speedbrake ..... NONE
NWS Disengage ..... 60 KIAS
Holding ..... 200 KIAS
Turb air penetration ..... 225/.7 My
Best glide ..... 170 KIAS
Pilot's sliding window ..... 150 KIAS

RPM LIMITATIONS

< 10 -20% ..... use starter to assist airstart
8-10% ..... if not obtained in 15 seconds, shutdown; advance throttle to IDLE
31-35% ..... igniters go off during start sequence
40% ..... generator on-line
42 ± 1% ..... IDLE
58% ..... needed for AC GEN operation
>75% ..... required for de-ice boot operation
95% ..... SPEEDBRAKE OPEN light on if speedbrake out
96% ..... max T/G power setting
42-103% ..... normal operating rpm
104.2% ..... max accel/max takeoff

TEMPERATURES

< 0° F	do not attempt battery start
-40 -0C	use fuel heater (fuel starts to freeze below -40 C)
-5 - 20C	turn ram air inlet heat ON (ANTI-ICE)
0 - 43C	normal fuel temperature
60 - 80F	auto range for cabin temp selector
120F	max battery temp for batt start; amber; ISOL
150F	battery switch OFF; red BATT HOT light
130C	CABIN AIR HOT light on
135C	AFT FUS HOT light on
40 - 120C	normal oil temps
515C	max EGT at IDLE
525C	max EGT during start
655C	max continuous EGT
718C	max accel/max takeoff EGT

ELECTRICAL

24 volts	minimum on DC voltmeter prior to battery start
12 volts	minimum on DC voltmeter during battery start
115 ±8v	normal inverter voltage
28VDC/800 amp	external power start- requirements
31 - 33v	overvoltage may cutoff generator, reset
90 volts	inverter will go off-line
28VDC/400 amp	generator capacity
26VDC/40 amp-h	battery capacity
1500/1250 va	main/stdby inverter power capacity PRESSURES
9.1 psi	max diff if cabin pressure regulator fails
35 psi	min oil pressure at IDLE
40 - 50 psi	normal oil pressure
900 ± 50 psi	thrust reverser accumulator precharge
1500 ± 50 psi	norm/aux hydraulic accumulator precharge
1500 - 1800 psi	normal oxygen bottle pressure
2000 ± 100 psi	HYD PWR PRESS OFF light on
2500 - 2700 psi	oxygen cylinder overpressure
2650 - 3200 psi	normal hydraulic accumulator
2700 psi	HYD PWR PRESS OFF light if more than 1 minute
2800 - 3600 psi	aux hydraulic accumulator
1800 psi	wheelbrake system pressure (metered from 3000)

MISCELLANEOUS

starter limits	4 - 30 second attempts, 2 mins between ea. in a 20 min period
igniter limits	2 min on, 3 min off, 2 min on, 23 min off
1.5 EPR	required for engine anti-icing
3300 lbs	takeoff power thrust at sea level
0 - 2500 AGL	limits of radar altimeter
0 - 8000 MSL	no pressurization occurs
1500 AGL^{-}	min altitude for autopilot engagement; T/R switch OFF
10,000 $\pm$ 400 MSL	CABIN PRESS FAIL light on; FASTEN SEATBELT It
13,500 $\pm$ 500 MSL	02 warning horn; automatic passenger 02 flow
FL 180	max for aux air conditioner
25,000 MSL	remain below if cabin unpressurized.
41,000 MSL	all occupants wear oxygen masks above
45,000 MSL	aircraft ceiling
260 - 600 PPH	start fuel flow, each engine
1063 gallons	useable fuel
200 lbs	max fuel imbalance for takeoff or landing
300 lbs	low fuel lights on
400 lbs	max fuel imbalance enroute
11,700	empty weight
13,300	zero fuel weight
17,500	max landing weight
20,000 lbs	max takeoff weight
20,400 lbs	max gross weight
10 seconds	max time allowed at zero or negative g
20 seconds	if no lightoff during start, windmill; if no oil pressure during start, shutdown
0 – 2.0 g	gear and/or flaps extended
-1.0 - 4.0 g	sea level to 20,000 MSL, upper limit decreasing by 1/2g each additional 5,000 feet
1.6 gallons	oil capacity
2 gallons	hydraulic reservoir capacity
Airstart envelope	below 29,000 MSL, > 160 KIAS
Max range	25,000 MSL and .55 PAN (with cabin press failed)
Clean glide	21NM per 10,000 AGL (dirty is approximately 1/2 of this)
Noise abatement T/O	set EPR = 1.6, 160 KIAS climb
30 minutes	emergency lights battery life
4 hours	standby attitude indicator power
45 minutes	battery life with dual generator failure

THIS PAGE INTENTIONALLY LEFT BLANK