WORKBOOK

INSTRUMENT FLIGHT RULES

T-34C

2007

DEPARTMENT OF THE NAVY
CHIEF OF NAVAL AIR TRAINING
CNATRA
250 LEXINGTON BLVD SUITE 102
CORPUS CHRISTI TX 78419-5041

CNATRA P-305
N712

24 AUG 2007

CNATRA P-305 (Rev. 07-07)

Subj: WORKBOOK, INSTRUMENT FLIGHT RULES, T-34C

1. CNATRA P-305 (Rev. 07-07) PAT, "Workbook, Instrument Flight Rules, T-34C" is issued for information, standardization of instruction and guidance of all flight instructors and student aviators within the Naval Air Training Command.

2. This publication shall be used as an explanatory aid to the T-34C Instrument Flight Rules Curriculum. It will be the authority for the execution of all flight procedures and maneuvers therein contained.

3. Recommendations for changes shall be submitted via CNATRA TCR form 1555/19 in accordance with CNATRAINST 1550.6E.

4. CNATRA P-305 (Rev. 06-03) PAT, is hereby cancelled and superseded.

R. A. RALL
By direction

Distribution:
CNATRA N71 (3) Plus Original
CNATRA N62 (1)
COMTRAWING FOUR (300)
COMTRAWING FIVE (400)

WORKBOOK

FOR

INSTRUMENT FLIGHT RULES

T-34C

Q-2A-0108

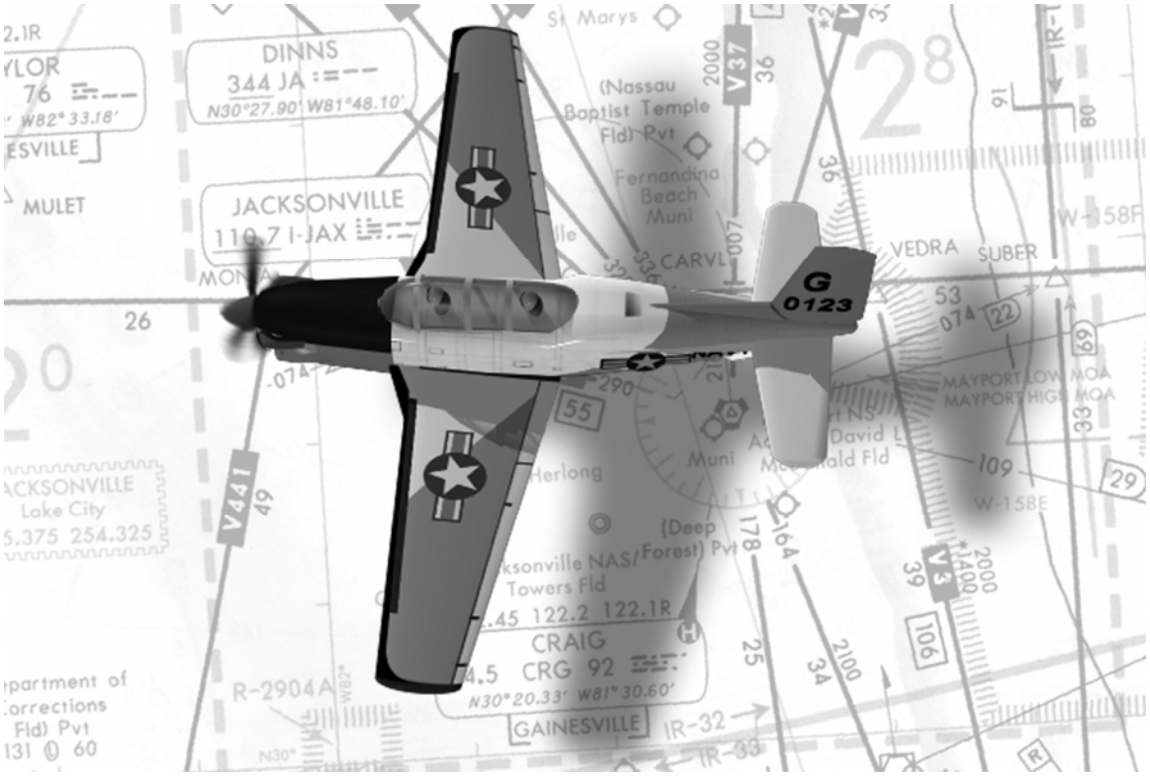

THIS PAGE INTENTIONALLY LEFT BLANK

LIST OF EFFECTIVE PAGES

Dates of issue for original and changed pages are:
Original...0...30 June 03 (this will be the date issued)
Revision…1...20 July 07
Change…1…16 July 09

TOTAL NUMBER OF PAGES IN THIS PUBLICATION IS 234 CONSISTING OF THE FOLLOWING:

Page No.	Change No.	Page No.	Change No.
COVER	0	7-1 – 7-5	0
LETTER	0	7-6 (blank)	0
ix – xii	0	8-1 – 8-10	0
1-1 – 1-43	0	8-11	1
1-44 (blank)	0	8-12 – 8-18	0
2-1 – 2-4	0	8-19	1
2-5 –2-6	1	8-20 – 8-36	0
2-7 – 2-22	0	9-1 – 9-3	0
2-23	1	9-4 – 9-6	1
2-24 – 2-40	0	9-7 (blank)	0
3-1 – 3-6	0	9-8	0
3-7 (blank)	0	9-9 – 9-11	1
3-8 – 3-24	0	9-12 (blank)	0
3-25 (blank)	0	A-1 – A-6	0
3-26 – 3-28	0		
4-1 – 4-28	0		
4-29 (blank)	0		
4-30 – 4-31	0		
4-32 (blank)	0		
5-1 – 5-12	0		
6-1	0		
6-2	1		
6-3	0		
6-4 – 6-5	1		
6-6 (blank)	0		

INTERIM CHANGE SUMMARY

The following Changes have been previously incorporated in this manual:

CHANGE NUMBER	REMARKS/PURPOSE
1	Changes made per transmittal letter (07-16-09)

The following interim Changes have been incorporated in this Change/Revision:

INTERIM CHANGE NUMBER	REMARKS/PURPOSE	ENTERED BY	DATE

INTRODUCTION

OPNAVINST 3710.7, governing all Naval Aviators states, "In order to decrease the probability of midair collisions, all flights in naval aircraft shall be conducted in accordance with Instrument Flight Rules (IFR) to the maximum extent practicable." This would not include mission requirements to fly under Visual Flight Rules (VFR) on certain flights. With the spirit of this policy in mind, the student aviator can see the importance of flight under IFR conditions. The Primary Instrument Navigation course covers a broad range of objectives connected with understanding IFR and planning a simulated IFR flight.

HOW TO USE THIS WORKBOOK

1. Read and become familiar with the objectives. These objectives state the purpose of the chapter of instruction in terms of WHAT YOU WILL BE ABLE TO DO as you complete the unit. Most importantly, your end-of-course examination is developed directly from these objectives. Therefore, it is to your benefit to know all information the objectives are asking you to comprehend.

2. Read and comprehend the information in each chapter, using the objectives as a guide.

3. After comprehending all facts and information indicated by the objectives, answer the workbook questions and check your answers. If you answer the questions correctly, continue to the next chapter. If you incorrectly answer any question(s), review the objective and information covering that subject area.

TABLE OF CONTENTS

LIST OF EFFECTIVE PAGES ..... **v**
INTERIM CHANGE SUMMARY ..... **vi**
INTRODUCTION ..... **vii**
HOW TO USE THIS WORKBOOK ..... **vii**
TABLE OF CONTENTS ..... **viii**
TABLE OF FIGURES ..... **xi**

CHAPTER ONE - INTRODUCTION TO AIRBORNE NAVIGATION AND COMMUNICATIONS EQUIPMENT AND PRINCIPLES OF OPERATION **1-1**
100. INTRODUCTION 1-1
101. LESSON TOPIC LEARNING OBJECTIVES 1-1
102. NAVIGATION AND COMMUNICATIONS EQUIPMENT 1-3
103. VOR PRINCIPLES OF OPERATION 1-4
104. INSTRUMENT LANDING SYSTEM 1-7
105. VHF COMMUNICATIONS 1-11
106. UHF COMMUNICATIONS 1-12
107. TACTICAL AIR NAVIGATION (TACAN) 1-13
108. TACAN CHARACTERISTICS 1-19
109. GLOBAL POSITIONING SYSTEM (GPS) 1-23
110. TRANSPONDER 1-25
111. BEARINGS, RADIALS, AND COURSES 1-26
112. RADIO MAGNETIC INDICATOR 1-28
113. COURSE DEVIATION INDICATOR 1-33
114. NAVIGATION FIXES 1-35
115. CHAPTER ONE REVIEW QUESTIONS 1-36
116. CHAPTER ONE REVIEW ANSWERS 1-42

CHAPTER TWO - IFR SUPPLEMENT, FLIGHT INFORMATION HANDBOOK, ENROUTE LOW ALTITUDE CHARTS, GENERAL PLANNING, AND AREA PLANNING **2-1**
200. INTRODUCTION 2-1
201. LESSON TOPIC LEARNING OBJECTIVES 2-1
202. IFR SUPPLEMENT 2-7
203. IFR SUPPLEMENT QUESTIONS 2-8
204. IFR SUPPLEMENT ANSWERS 2-14
205. FLIGHT INFORMATION HANDBOOK (FIH) GENERAL INFORMATION 2-17
206. FLIGHT INFORMATION HANDBOOK QUESTIONS 2-18
207. FLIGHT INFORMATION HANDBOOK ANSWERS 2-20
208. ENROUTE LOW ALTITUDE CHARTS 2-22
209. AREA CHARTS 2-22
210. DIRECTION QUESTIONS: 2-24
211. ENROUTE LOW ALTITUDE CHART QUESTIONS 2-25
212. ENROUTE LOW ALTITUDE CHART ANSWERS 2-28

213. GENERAL PLANNING QUESTIONS (GP) 2-30
214. GENERAL PLANNING ANSWERS 2-36
215. AREA PLANNING (AP/1) QUESTIONS 2-37
216. AP/1 ANSWERS 2-40

CHAPTER THREE - INSTRUMENT APPROACH PROCEDURES 3-1
300. INTRODUCTION 3-1
301. LESSON TOPIC LEARNING OBJECTIVES 3-1
302. INSTRUMENT APPROACH PROCEDURES 3-4
303. PRECISION APPROACHES 3-4
304. PAR APPROACH 3-4
305. PRECISION AND PAR QUESTIONS 3-6
306. ANSWERS TO QUESTIONS ON PRECISION AND PAR APPROACHES 3-7
307. NONPRECISION APPROACHES 3-9
308. ASR APPROACH 3-9
309. LOCALIZER APPROACH 3-9
310. APPROACH MINIMA 3-10
311. APPROACHES – TYPES OF LANDINGS 3-10
312. APPROACH MINIMA–WEATHER MINIMUMS 3-11
313. APPLICABLE RULES FROM OPNAV 3710.7 3-12
314. PRACTICE APPROACHES 3-12
315. MISSED APPROACH 3-13
316. APPROACH PLATES 3-13
317. PLAN VIEW 3-15
318. PROFILE VIEW SECTION 3-17
319. MINIMUMS SECTION 3-18
320. NOTES SECTION 3-19
321. AIRPORT DIAGRAM/SKETCH 3-19
322. APPROACH IDENTIFICATION 3-19
323. INSTRUMENT APPROACH PROCEDURES QUESTIONS 3-21
324. INSTRUMENT APPROACH PROCEDURES ANSWERS 3-26

CHAPTER FOUR - INSTRUMENT FLIGHT RULES 4-1
400. INTRODUCTION 4-1
401. LESSON TOPIC LEARNING OBJECTIVES 4-1
402. WEATHER CRITERIA FOR FILING AND THE DD 175 MILITARY FLIGHT PLAN 4-3
403. IFR FLIGHT PLAN 4-13
404. STOPOVER FLIGHT PLANS 4-22
405. ENROUTE DELAY FLIGHT PLANS 4-23
406. COMPOSITE FLIGHT PLAN 4-24
406. CHAPTER FOUR REVIEW QUESTIONS 4-25
407. CHAPTER FOUR REVIEW ANSWERS 4-30

CHAPTER FIVE - CR-2 COMPUTER 5-1
500. INTRODUCTION 5-1
501. LESSON TOPIC LEARNING OBJECTIVES 5-1
502. THE COMPUTATION SIDE OF THE CR-2 COMPUTER 5-1
503. TIME, DISTANCE, SPEED PROBLEMS 5-1
504. SOLUTION OF TIME IN MINUTES AND SECONDS 5-4
505. FUEL CONSUMPTION PROBLEMS 5-4
506. AIRSPEED CONVERSIONS 5-5
507. THE WIND SIDE OF THE CR-2 COMPUTER 5-6
508. CHAPTER FIVE REVIEW QUESTIONS 5-11
509. CHAPTER FIVE REVIEW ANSWERS 5-12

CHAPTER SIX - FLIGHT PLANNING RULES (FLIGHT LOG) 6-1
600. INTRODUCTION 6-1
601. LECTURE PROBLEM 6-4

CHAPTER SEVEN - HOLDING 7-1
700. INTRODUCTION 7-1
701. LESSON TOPIC LEARNING OBJECTIVES 7-1
702. HOLDING PROCEDURES 7-1

CHAPTER EIGHT - INTRODUCTION TO GROUND, AIRBORNE, LOST COMMUNICATION, AND EMERGENCY VOICE PROCEDURES 8-1
800. INTRODUCTION 8-1
801. LESSON TOPIC LEARNING OBJECTIVES 8-1
802. RADIO COMMUNICATION PHRASEOLOGY AND TECHNIQUES 8-3
803. ATC 8-7
804. ESTABLISHING COMMUNICATIONS 8-9
805. GROUND VOICE PROCEDURES 8-12
806. TAKEOFF/DEPARTURE INSTRUCTIONS 8-17
807. AIRBORNE VOICE REPORTS 8-19
808. ADDITIONAL REPORTS 8-29
809. SUMMARY OF IMPORTANT IFR VOICE REPORTS 8-31
810. LOST COMMUNICATIONS 8-32
811. EMERGENCIES 8-35

CHAPTER NINE - COURSE SUMMATION 9-1
900. SUMMATION QUESTIONS 9-1
901. SUMMATION ANSWERS 9-8

APPENDIX A GLOSSARY OF COMMUNICATION TERMS A-1

TABLE OF FIGURES

Figure 1-1 Joint Communication Electronic Nomenclature System 1-3
Figure 1-2 VOR/VIR-30A Control Panel 1-5
Figure 1-3 Radio Magnetic Indicator 1-5
Figure 1-4 VOR Signal Phase Angle Relationship 1-7
Figure 1-5 Limits of Localizer Coverage 1-9
Figure 1-6 FAA Instrument Landing Systems 1-10
Figure 1-7 BECKER AR4201 VHF 1-11
Figure 1-8 UHF AN/ARC-159V Control Panel 1-12
Figure 1-9 TACAN/TCN-40 Control Panel 1-13
Figure 1-10 TACAN Ground Beacon Antenna Design (Azimuth) 1-15
Figure 1-11 Cardioid Pattern Resulting From Inner Parasitic Element 1-16
Figure 1-12 Fine Azimuth Pattern 1-17
Figure 1-13 Combination of Signal Received by Aircraft 1-17
Figure 1-14 DME Principles 1-18
Figure 1-15 DME Distances 1-19
Figure 1-16 TACAN Characteristics 1-20
Figure 1-17 TACAN Azimuth Cone of Confusion 1-21
Figure 1-18 KLN-900 Control Panel 1-23
Figure 1-19 Transponder Control Panel 1-25
Figure 1-20 Course "TO" and Bearing "FROM" 1-26
Figure 1-21 VOR Navigation 1-27
Figure 1-22 Radio Magnetic Indicator (RMI) 1-28
Figure 1-23 KA41 Annunciator/Control Panel 1-29
Figure 1-24 RMI Example A and Example B 1-30
Figure 1-25 Homing 1-31
Figure 1-26 Tracking 1-32
Figure 1-27 IND-350 1-33
Figure 1-28 Radio Magnetic Indicator (RMI) 1-34
Figure 1-29 RMI Orientation Technique 1-35
Figure 1-30 TACAN Fix 1-35

Figure 2-1 View the Front Cover of the IFR Supplement United States 2-7
Figure 2-2 Flight Information Handbook – Front Cover 2-17

Figure 3-1 NSE Whiting Field TACAN 5 3-14

Figure 4-1 Cloud Separations and Visibilities 4-4
Figure 4-2 Radar Instrument Approach Minimums 4-6
Figure 4-3 TACAN RWY 21 4-7
Figure 4-4 OPNAV 3710.7 (Figure 4.1) 4-8
Figure 4-5 Forecasted Weather 4-8
Figure 4-6 Radar Instrument Approach Minimums 4-9
Figure 4-7 Alternate Weather Requirement 4-10
Figure 4-8 Radar Instrument Approach Minimums 4-11

Figure 4-9 Restrictions 4-11
Figure 4-10 Marianna Municipal Airport 4-12
Figure 4-11 IFR Alternate Minimums 4-13
Figure 4-12 No Alternate Required 4-13
Figure 4-13 DD 175 4-14
Figure 4-14 Aircraft Call Sign 4-15
Figure 4-15 Type of Flight Plan 4-15
Figure 4-16 Route of Flight 4-16
Figure 4-17 IFR Climb Departure to Crestview 4-16
Figure 4-18 Three Letter Identifier 4-16
Figure 4-19 Same IAF Identifier and Destination Airport 4-17
Figure 4-20 Area Map 4-17
Figure 4-21 TACAN RWY 7R 4-18
Figure 4-22 Route of Flight Entries 4-19
Figure 4-23 ETE 4-19
Figure 4-24 Remarks 4-19
Figure 4-25 Rank and Honor Code 4-20
Figure 4-26 Fuel on BD 4-20
Figure 4-27 Alternate Airfield and ETE to Alternate 4-20
Figure 4-28 NOTAMS and Weather 4-20
Figure 4-29 Weight and Balance 4-21
Figure 4-30 Aircraft Serial Number, Unit and Home Station 4-21
Figure 4-31 Aircraft Serial Number, Unit and Home Station – NAS Whiting Field 4-21
Figure 4-32 Signature of Approval Authority 4-21
Figure 4-33 Crew/Passenger List 4-22
Figure 4-34 Organization and Location 4-22
Figure 4-35 Stopover Flight Plans 4-22
Figure 4-36 Terminal Area Delay Flight Plan 4-23
Figure 4-37 Holding Delay Flight Plan w/Delay at Crestview 4-23
Figure 4-38 Composite Flight Plan #1 4-24
Figure 4-39 Composite Flight Plan #2 4-24
Figure 4-40 DD Form 175 4-28
Figure 4-41 DD Form 175 #19 Answers 4-31

Figure 5-1 Time, Distance, and Speed 5-2

Figure 7-1 Holding Side of the Fix 7-2
Figure 7-2 Making Turns on the Procedural Side #1 7-3
Figure 7-3 Making Turns on the Procedural Side #2 7-3
Figure 7-4 VOR – Holding 7-4
Figure 7-5 Hold West of the 20 DME Fix 7-4

Figure 8-1 Clearance Limits 8-15
Figure 8-2 ATC System Command Center 8-17
Figure 8-3 DP 8-19

CHAPTER ONE
INTRODUCTION TO AIRBORNE NAVIGATION AND COMMUNICATIONS EQUIPMENT AND PRINCIPLES OF OPERATION

100. INTRODUCTION

This chapter introduces the student to the communications and navigation equipment installed in the T-34C, navigational aids, and their principles of operation.

101. LESSON TOPIC LEARNING OBJECTIVES

TERMINAL OBJECTIVES

1. Recall the operation, frequency ranges, and limitations of the radios and navigational receivers installed in the T-34C.

2. Recall the principles of operation of the Very High Frequency (VHF) Omnidirectional Range (VOR), Tactical Air Navigation System (TACAN), and the function and modes of the transponder.

3. Interpret how to orient the aircraft's position with reference to the navigational instruments displayed in the T-34C cockpit.

ENABLING OBJECTIVES

1. Identify the radios installed in the T-34C.

2. State the functions and frequency ranges of VOR, TACAN, Non-Directional Beacon (NDB), and two-way voice communication radios.

3. State the functions and frequency ranges of VOR, TACAN, and NDB stations.

4. State the functions and frequency ranges of the radios installed in the T-34C.

5. Define the operational principles of the VOR navigational system.

6. Define the operational principles of the TACAN navigational system.

7. List the differences between the VOR and TACAN navigational systems.

8. Define the cone of confusion.

9. List the primary and secondary items used to identify "station passage" over VOR and TACAN navigational facilities.

10. Define "slant range."

11. State the airspace and altitude where all aircraft are required to have transponders with mode C equipment.

12. List the operation procedures for the transponder installed in the T-34C.

13. State the functions and special codes of a transponder.

14. Identify an aircraft's position from information presented on the Radio Magnetic Indicator (RMI).

15. Identify the parts displayed on the face of the RMI.

16. Identify radials and bearings as displayed on the RMI.

17. Determine courses to be dialed into the Course Indicator.

18. Determine if the aircraft is left or right of the selected course.

19. Determine the aircraft's heading relative to the selected course.

20. Determine if the selected course will take the aircraft to or from the navigational facility.

21. Determine requirements for Receiver Autonomous Integrity Monitoring (RAIM).

22. Identify satellite requirements for Global Positioning System (GPS) operations.

1-2 INTRODUCTION TO AIRBORNE NAVIGATION AND COMMUNICATIONS EQUIPMENT AND PRINCIPLES OF OPERATION

102. NAVIGATION AND COMMUNICATIONS EQUIPMENT

The military has developed a nomenclature system to identify the various types of electronic equipment in the military inventory. The Joint Communication Electronic Nomenclature System ("AN" system), formerly known as the Joint Army Navy Nomenclature System, was designed so a designation indicates information pertinent to the equipment. The designation indicates the designed installation of the gear, the type of equipment, and its purpose. Civilian equipment designations, however, do not conform to the "AN" system.

A designation that follows the "AN" system begins with the letters AN. This is followed by a slash and then a three-letter group. The three letters indicate the general nature of the installation, type of equipment, and purpose, respectively. Following the three-letter group is a number and possibly a letter which indicates the specific model. An example of a designation code is AN/ARC-159V. This code indicates that this piece of gear would be a piloted aircraft radio for communication (receiving and transmitting) (Figure 1-1).

First letter (Designed installation classes)	Second letter (Type of equipment)	Third letter (Purpose)
A - Piloted aircraft	A - Invisible light, heat radiation	A - Auxiliary assemblies (not complete operating sets used with or part of two or more sets or sets series
B - Underwater mobile, submarine	B - Pigeon (do not use)	B - Bombing
C - Air transportable (inactivated, do not use)	C - Carrier	C - Communications (receiving and transmitting)
D - Pilotless carrier	D - Radiac	D - Direction finder, reconnaissance, and/or surveillance
F - Fixed ground	E - Nupac	E - Ejection and/or release
G - General ground use	F - Photo	G - Fire-control, or search-light directing
K - Amphibious	G - Telegraph or teletype	H - Recording and/or reproducing (graphic, meteorological and sound)
M - Ground, mobile	I - Interphone and public address	K - Computing
P - Portable	J - Electromechanical or Inertial wire covered	L - Searchlight control (inactivated, use G)
S - Water surface	K - Telemetering	M - Maintenance and/or test assemblies (including tools)
T - Ground, transportable	L - Countermeasures	N - Navigational aids (including altimeters, beacons, compasses, racons, depth, sounding, approach, and landing)
U - General utility	M - Meteorologic	P - Reproducing (inactivated, use H)
V - Ground, vehicular	N - Sound in air	Q - Special, or combination of purposes
W - Water surface and underwater combination	P - Radar	R - Receiving, passive detecting
	Q - Sonar and underwater sound	S - Detecting and/or range and bearing, search
	R - Radio	T - Transmitting
	S - Special types, magnetic, etc., or combinations of types	W - Automatic Flight or remote control
	T - Telephone (wire)	X - Identification and recognition
	V - Visual and visible light	
	W - Armament (peculiar to armament, not otherwise covered)	
	X - Facsimile or television	
	Y - Data processing	

Figure 1-1 Joint Communication Electronic Nomenclature System

Air navigation and communications radios operate over a wide range of radio frequencies which are measured in cycles per second or Hertz (Hz). A Hertz frequency number can extend into the billions, so to simplify the writing of such large numbers, a prefix is used. The two prefixes used

to identify the frequency ranges most commonly used in aviation are kilo (k) for 1000 Hz and mega (M) for 1,000,000 Hz. For example, a frequency of 225,900,000 Hz would be written 225.9 MHz.

The four main frequency ranges used with air navigation and communication radios are:

1. Low Frequency/Medium Frequency (LF/MF)

2. High Frequency (HF) (not discussed)

3. VHF

4. Ultra High Frequency (UHF)

Military air navigation and communication radios operate in specific bands within each frequency range as indicated below:

1. LF/MF – 100 to 1750 (kHz)

2. HF – 2.0 to 29.999 (MHz) (not discussed)

3. VHF – 108.00 to 136.975 (MHz)

4. UHF – 225.00 to 399.975 (MHz)

Military aircraft use LF/MF radios, which are more commonly known as Automatic Direction Finders (ADFs), primarily as a backup navigational radio. Aircraft LF/MF radios are similar to automobile radios; they are only capable of receiving. An ADF receiver is used to receive bearing information from ground transmitters called Non-Directional Beacons (NDBs). These facilities operate in the 190 to 535 kHz band and transmit a continuous two or three-letter Morse code identifier. Those NDBs which have a class code of AB (listed in IFR Supplement) transmit continuous automatic transcribed weather broadcasts in addition to the three-letter identifier. An ADF receiver can also receive commercial broadcasting stations operating in the AM frequency band from 540 to 1650 kHz. The ADF is very susceptible to atmospheric disturbances and is severely limited in areas of thunderstorms or other severe weather. TACAN and VOR, however, are not greatly affected by weather. The T-34C is one of the few military aircraft that has no ADF installed.

The VHF frequency band of 108.00 to 136.975 MHz serves the purposes of air navigation and communication.

103. VOR PRINCIPLES OF OPERATION

The lower half of the VHF band is used in the VOR air navigation system; the frequency range is from 108.00 to 117.95 MHz. The present system of federal low altitude airways in the United States is based on a network of VOR stations (commonly referred as “Victor” Airways).

1-4 INTRODUCTION TO AIRBORNE NAVIGATION AND COMMUNICATIONS EQUIPMENT AND PRINCIPLES OF OPERATION

VOR receivers provide the pilot magnetic bearing information and are capable of receiving voice transmissions. The bearing information is displayed on the No.1 needle of the RMI (Figures 1-2 and 1-3).

Figure 1-2 VOR/VIR-30A Control Panel

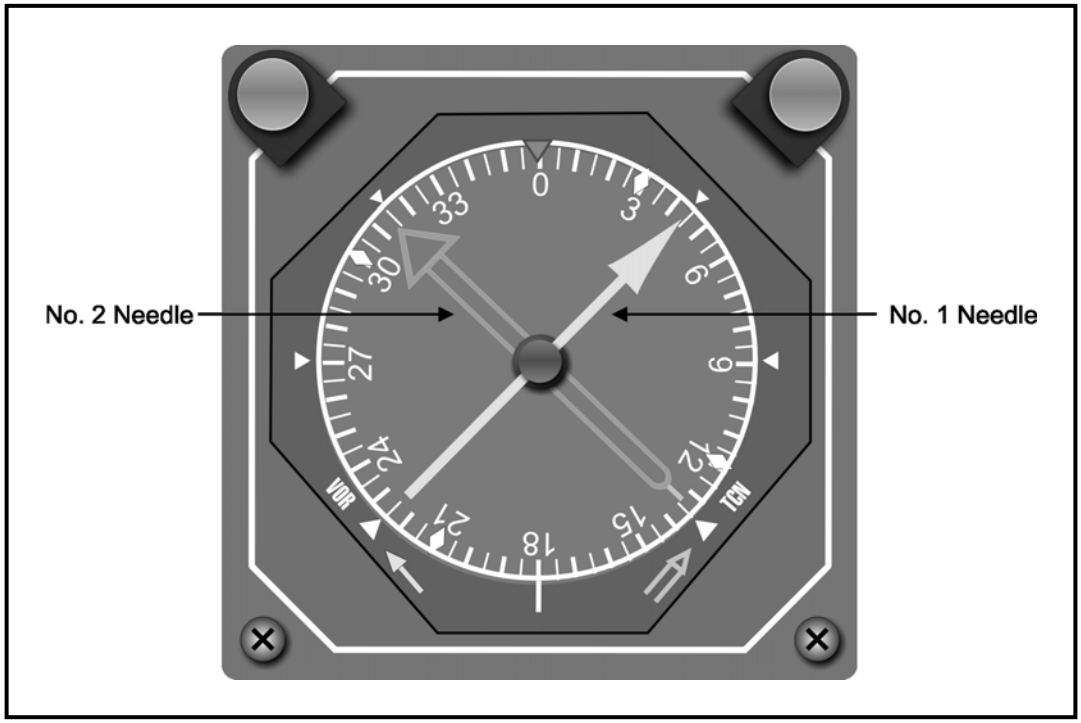

Figure 1-3 Radio Magnetic Indicator

VOR navigation facilities transmit either a three-letter Morse code identifier or a voice call sign alternating with the usual Morse code identification.

VOR station passage is indicated by:

1. TO/FROM indicator switches from “TO” to “FROM” (primary indication),

2. VOR needle rotates 180º, and

3. Course (CDI) oscillates from side to side.

VOR operation is based on the phase difference between two signals transmitted from a VOR facility (Figure 1-4). The reference signals, or the omnidirectional signal, radiates from the station in a circular pattern. The phase of the signal is constant. The other signal rotates uniformly and its phase varies at a constant rate. Magnetic North is used as a baseline for electronically measuring the phase relationship between the two signals. At Magnetic North, the signals are in phase; however, a phase difference exists at any other point around the station and is electronically measured by the aircraft’s VOR receiver. The VOR provides 360 magnetic courses called radials, which radiate **from** the station like spokes from the hub of a wheel. Unlike the NDB system, the VOR system is not affected by lightning or severe weather. The VOR system is also more accurate, but is limited to line-of-sight reception which varies with the altitude of the aircraft and elevation of the transmitter. Normal range is 40 Nautical Miles (NM) at 1000 feet Above Ground Level (AGL); this range increases with altitude.

The line-of-sight transmission pattern from VOR and TACAN facilities creates an area directly over the facility where signal reception is very weak or impossible. This area where navigation information is unreliable is called the cone of confusion. The cone of confusion affects course information received from either a VOR or TACAN station.

Most VORs are equipped for voice transmission on the VOR frequency. VORs without voice capability are indicated by the letter “W” (without voice) included in the class designator (VORW).

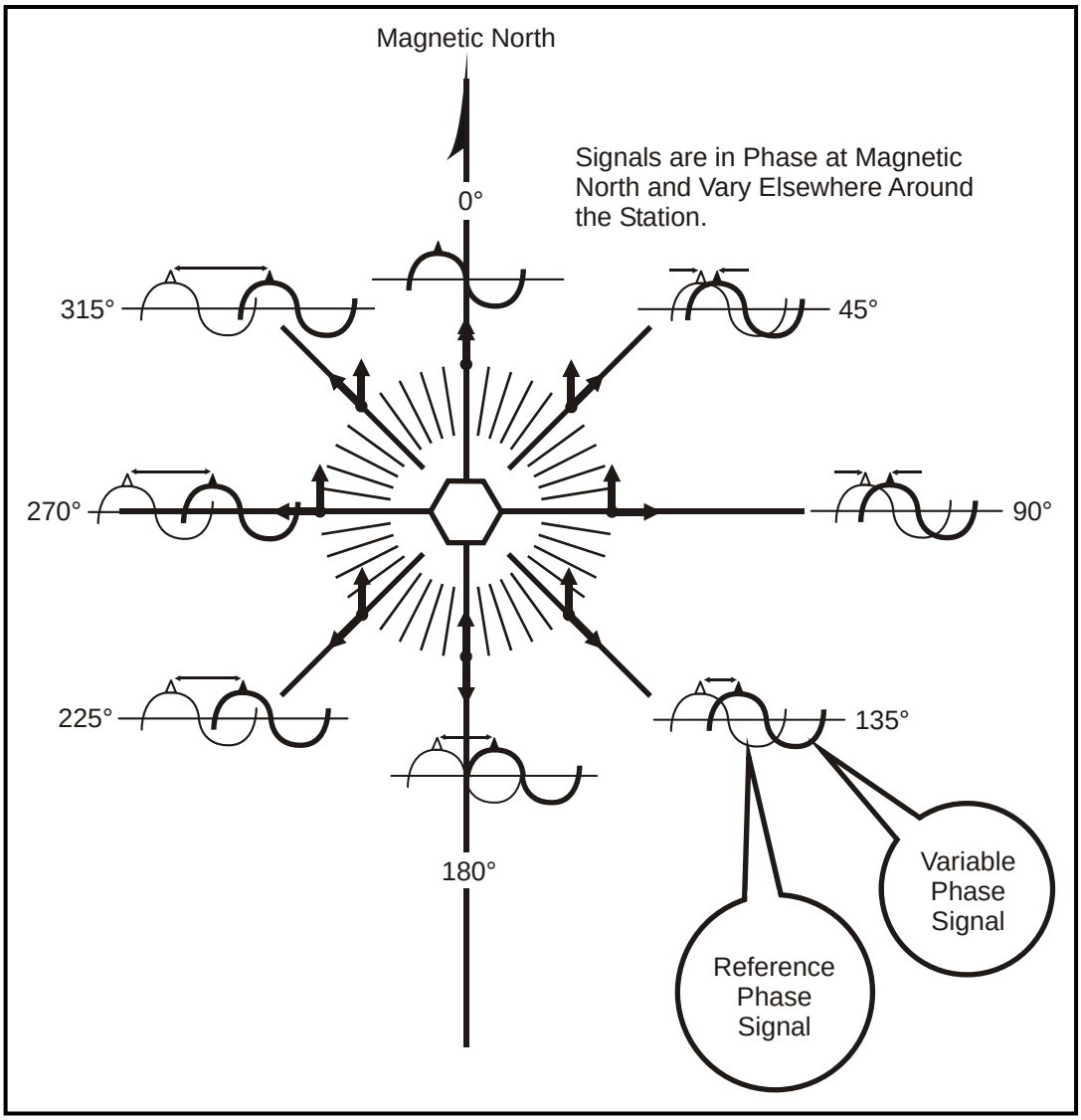

Figure 1-4 VOR Signal Phase Angle Relationship

104. INSTRUMENT LANDING SYSTEM

The Instrument Landing System (ILS) is designed to provide an approach path for exact alignment and descent of an aircraft on final approach to a runway. The ground equipment consists of two highly directional transmitting systems and, along the approach, three (or fewer) marker beacons. The directional transmitters are known as the localizer and glideslope transmitters.

The system may be divided functionally into three parts:

1. **Guidance information**: localizer and glideslope;

2. **Range information**: marker beacon and Distance Measuring Equipment (DME);

3. **Visual information**: approach lights, touchdown and centerline lights, runway lights.

Compass locators located at the outer marker (OM) or middle marker (MM) may be substituted for marker beacons. DME, when specified in the procedure, may be substituted for the OM (marker beacon receiver not installed in T-34).

Localizer

The localizer transmitter operates on one of 40 ILS channels within the frequency range of 108.10 to 111.95 MHz. Signals provide the pilot with course guidance to the runway centerline.

The approach course of the localizer is called the front course and is used with other functional parts, e.g., glideslope, marker beacons, etc. The localizer signal is transmitted at the far end of the runway. It is adjusted for a course width (full scale fly-left to a full scale fly-right) of 700 feet at the runway threshold.

The course line along the extended centerline of a runway, in the opposite direction to the front course is called the back course.

CAUTION

> Unless the aircraft's ILS equipment includes reverse sensing capability, when flying inbound on the back course it is necessary to steer the aircraft in the direction opposite the needle deflection when making corrections from off-course to on-course. This "flying away from the needle" is also required when flying outbound on the front course of the localizer. Do not use back course signals for approach unless a back course approach procedure is published for that particular runway and the approach is authorized by Air Traffic Control (ATC).

Identification is in International Morse Code and consists of a three-letter identifier preceded by the letter I (●●) transmitted on the localizer frequency.

Example:

I-DIA

The localizer provides course guidance throughout the descent path to the runway threshold from a distance of 18 NM from the antenna between an altitude of 1000 feet above the highest terrain along the course line and 4500 feet above the elevation of the antenna site. Proper off-course indications are provided throughout the following angular areas of the operational service volume:

1-8 INTRODUCTION TO AIRBORNE NAVIGATION AND COMMUNICATIONS EQUIPMENT AND PRINCIPLES OF OPERATION

1. To 10º either side of the course along a radius of 18 NM from the antenna; and

2. From 10 to 35 degrees either side of the course along a radius of 10 NM (Figure 1-5).

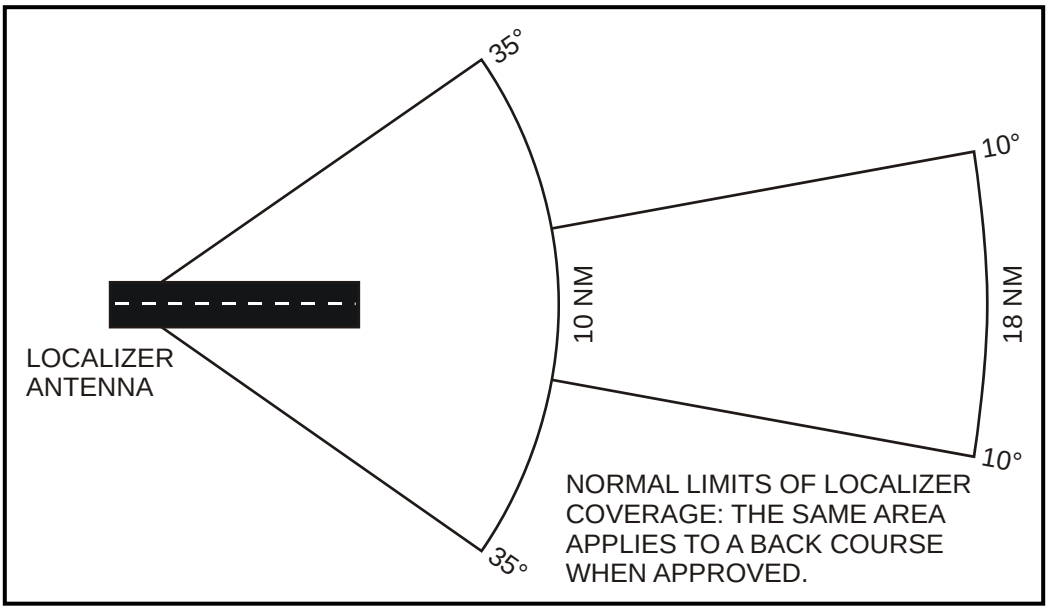

Figure 1-5 Limits of Localizer Coverage

3. Unreliable signals may be received outside these areas.

Glideslope/Glidepath

The UHF glideslope transmitter, operating on one of the 40 ILS channels within the frequency range 329.15 MHz, to 335.00 MHz radiates its signals in the direction of the localizer front course. The term "glidepath-" means that portion of the glideslope that intersects the localizer. A glideslope receiver is not installed in the T-34C.

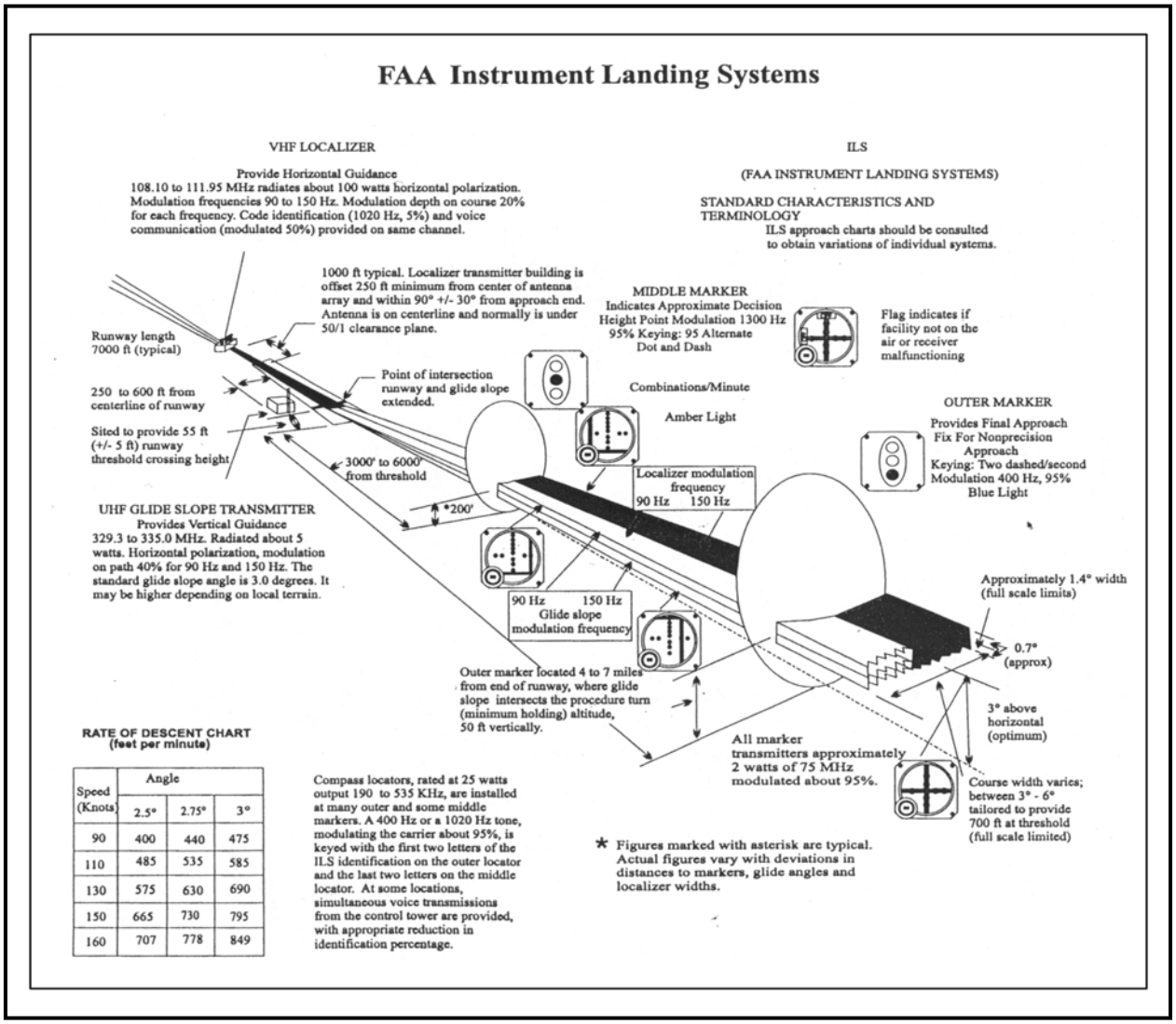

Figure 1-6 FAA Instrument Landing Systems

105. VHF COMMUNICATIONS

For two-way communications with ATC ground facilities and other aircraft, the military uses UHF and VHF band transceivers.

1. ON/OFF SWITCH ALSO CONTROLS VOLUME
2. FREQUENCY ADJUSTMENT (OUTER 10S, INNER 25 kHz)
3. MODE SELECTOR

Figure 1-7 BECKER AR4201 VHF

The VHF transceiver used in the T-34C is the Becker AR4201 with a frequency range from 118.000 to 136.975 (Figure 1-7). Spacing is 25 kHz with 460 available channels. The VHF communications radio is the primary transceiver for the civilian sector.

106. UHF COMMUNICATIONS

The UHF radio is capable of transmitting and receiving on any one of 1750 manually selected frequencies in the UHF band between 225.0 MHz to 399.975 MHz. Normally, they also have 20 preset frequencies and a GUARD channel which continually monitors the UHF emergency frequency of 243.0 MHz. The UHF transceiver used in the T-34C is the AN/ARC-159V (Figure 1-8).

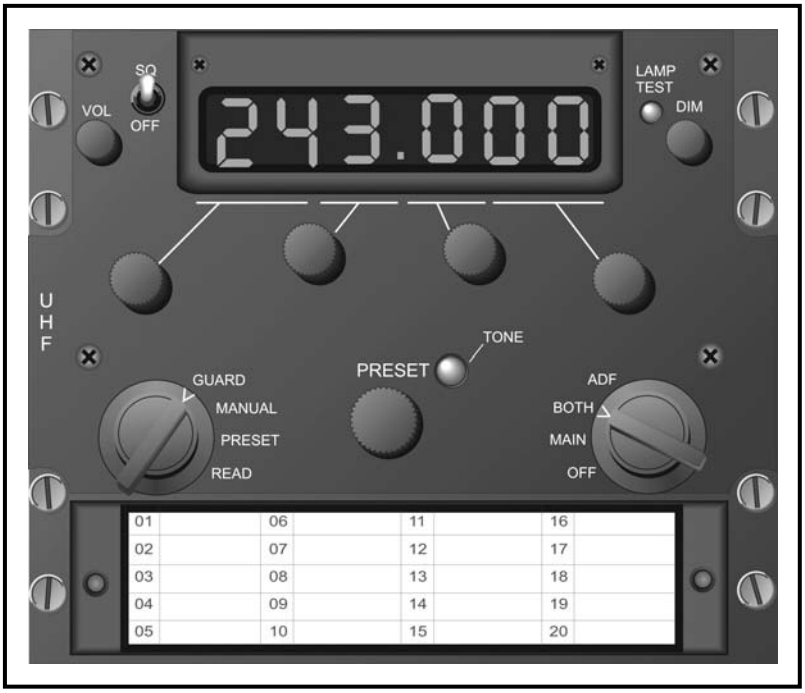

Figure 1-8 UHF AN/ARC-159V Control Panel

The ARC-159V, like most UHF transceivers, has a four-position function switch. The positions are as follows:

1. OFF – The radio is disconnected from the aircraft's power supply.

2. MAIN – Transmit and receive on the selected frequency set in the radio.

3. BOTH – Same as No. 2 plus the pilot is able to receive GUARD transmissions on 243.0 MHz.

4. ADF – Automatic direction finding. (Not used in the T-34C.)

The UHF frequency band is the primary choice for military voice communications.

107. TACTICAL AIR NAVIGATION (TACAN)

While civilians normally use VOR for air navigation, the military has developed another navigation system called **TAC**tical **A**ir **N**avigation, or TACAN. The TACAN in the T-34C is designated TCN-40.

Although VOR was a great improvement over earlier navigational systems, a gap still existed in the information available when navigating. The TACAN system was developed to fill this gap by providing information needed for precise geographical fixing of the aircraft's position. In addition to the displayed bearing information, TACAN adds a continuous display of range information. Like VOR, TACAN provides 360 courses radiating **from** a station. Distance measuring equipment, an integral part of TACAN, provides continuous slant-range distance information. An additional advantage is that TACAN ground equipment is compact and relatively easy to transport. This provides great versatility in beacon installation and mobility. Stations that have VOR and TACAN systems collocated are called VORTAC stations.

The TACAN has a three-position switch. The three positions are as follows (Figure 1-9):

1. OFF

2. STBY – Standby

3. T/R – Transmit and Receive

The OFF position disconnects the unit from the aircraft power supply. In the STBY position, the TACAN radio receives magnetic bearing information only from ground TACAN navigation facilities. This information is displayed in the cockpit by the No. 2 needle of the RMI (Figure 1-3). In the T/R position, the TACAN radio receives magnetic bearing and distance information. The distance from the aircraft to the TACAN navigation facility is displayed in the cockpit on the Naval Aircraft Collision Warning System (NACWS). In the T/R position, the TACAN determines distance by measuring the elapsed time between the transmission of an interrogating pulse from the airborne set and the reception of the corresponding reply pulse from the ground station.

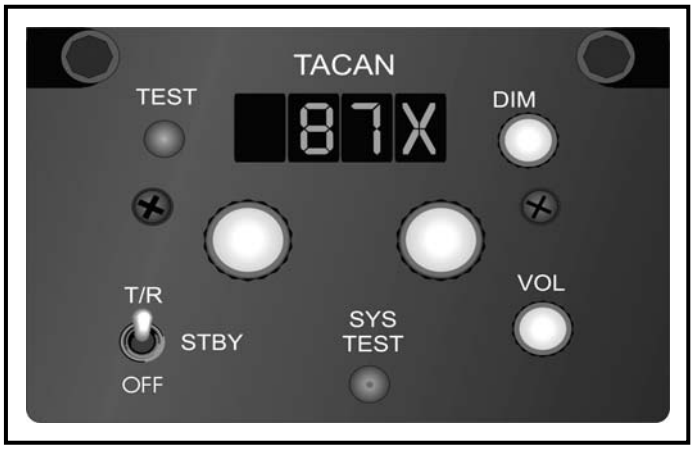

Figure 1-9 TACAN/TCN-40 Control Panel

Although a TACAN radio is a transceiver, it cannot be used to transmit or receive voice communications. A TACAN station will identify itself approximately every 37.5 seconds in Morse code using its three-letter identifier. The appropriate mixer switch must be ON to hear the identifying code.

TACAN station passage is indicated by:

1. Distance (DME) decreases to a minimum (primary indication),

2. TACAN needle rotates 180º,

3. CDI oscillates from side to side, and

4. TO/FROM indicator switches from "TO" to "FROM."

Frequencies and Ground Equipment

1. Frequencies. TACAN operates in the UHF (1000 MHz) band with a total of 126 two-way channels in the operational mode (X or Y). The DME air-to-ground frequencies for these channels are in the 1025 to 1150 MHz range and the associated ground-to-air frequencies are in the 962 to 1213 MHz range.

2. Ground equipment. TACAN ground equipment consists of a rotating type antenna for transmitting bearing information and a receiver-transmitter (transponder) for transmitting distance information. The TACAN station is identified by an international Morse-coded tone modulated at 1350 Hz with a reception interval of approximately 37.5 seconds. Permanent TACAN ground stations are usually dual transmitter equipped (one operating and one on standby), fully monitored installations which automatically switch to the standby transmitter when a malfunction occurs. The ground monitor, set to alarm at any radial shift of plus or minus one degree, is usually located in the base control tower or approach control and sets off a light and buzzer to warn the ground crew when an out-of-tolerance condition exists. Sometimes TACAN reception might be suspected of being in error or bearing/distance unlock conditions might be encountered in flight. When this occurs, the status of the ground equipment can be checked by calling ATC. When ground equipment is undergoing tests or repairs which might cause it to transmit erroneous signals, its identification is silenced. Therefore, always listen for identification signals during flight.

Signal Patterns

The signal pattern for bearing information is formed by varying the nondirectional pattern sent from the stationary central element of the TACAN transmitter antenna (Figure 1-10). The two types of bearing signal patterns are the coarse and fine azimuth patterns.

1. Coarse azimuth pattern. The pattern is created by rotating a plastic cylinder around the central element of the antenna at 15 Revolutions per Second (RPS). A metal wire embedded vertically in the cylinder distorts the radiated signal into a cardioid (heart-shaped) pattern. Its rotation causes the cardioid pattern to also revolve at 15 RPS.

1-14 INTRODUCTION TO AIRBORNE NAVIGATION AND COMMUNICATIONS EQUIPMENT AND PRINCIPLES OF OPERATION

This resulting rotating pattern (Figure 1-11) is referred to as the coarse pattern. From this, the aircraft receives an amplitude modulation of 15 Hz. This means that the strength of the signal goes from maximum to minimum and back to maximum at the rate of 15 times per second.

2. Fine azimuth pattern. To produce the fine pattern, another larger plastic cylinder containing nine wires is mounted around the central element and the smaller cylinder and also rotates at 15 RPS. This is the fine antenna, which superimposes nine lobes on the already formed coarse pattern (Figure 1-12). This forms a 135 Hz signal.

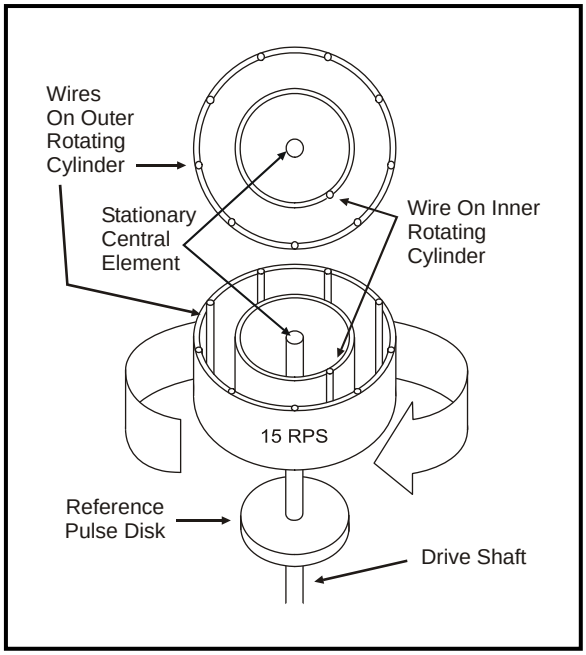

Figure 1-10 TACAN Ground Beacon Antenna Design (Azimuth)

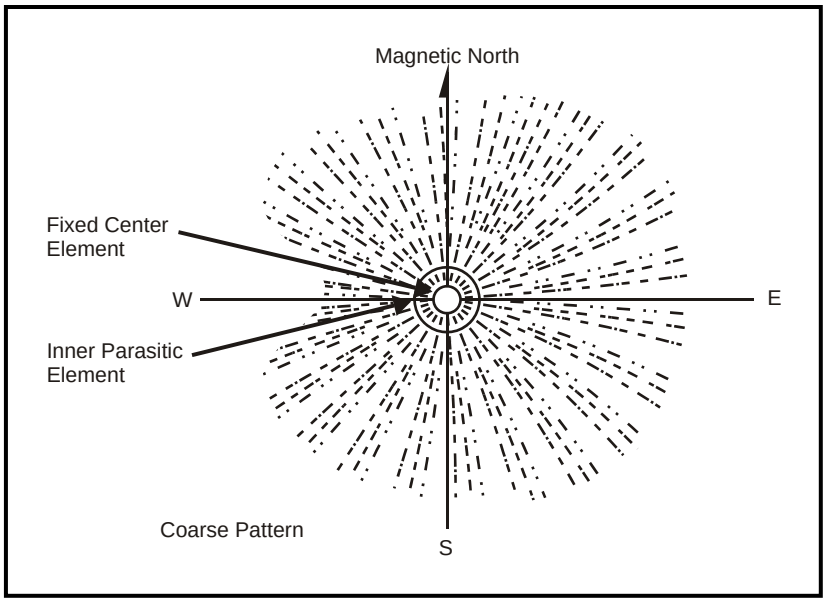

Figure 1-11 Cardioid Pattern Resulting From Inner Parasitic Element

3. Determination for bearing. To determine the aircraft's bearing from the station, a phase angle must be electronically measured. To measure the phase angle, a fixed reference is established. This fixed reference is a 15-pulse-per-second nondirectional signal normally referred to as the main reference bearing pulse. One main reference pulse occurs with each revolution of the antenna when the peak of the cardioid is at a magnetic direction of 90º. In addition to the main reference pulse, eight auxiliary reference pulses also occur during one revolution of the ground beacon antenna. Therefore, a reference pulse occurs each 40º of antenna rotation (360º divided by nine pulses). The airborne equipment electronically measures the time lapse between the main reference pulse and the maximum amplitude (signal strength) of the 15 Hz rotating signal pattern (Figure 1-13). This determines the aircraft's bearing from the station within a 40º sector. Then, the time lapse between the auxiliary reference pulses and the maximum amplitude of the 135 Hz signal is measured to determine the aircraft's position within the 40º sector. The accuracy of this measurement determines the position of the aircraft relative to the station within plus or minus one degree.

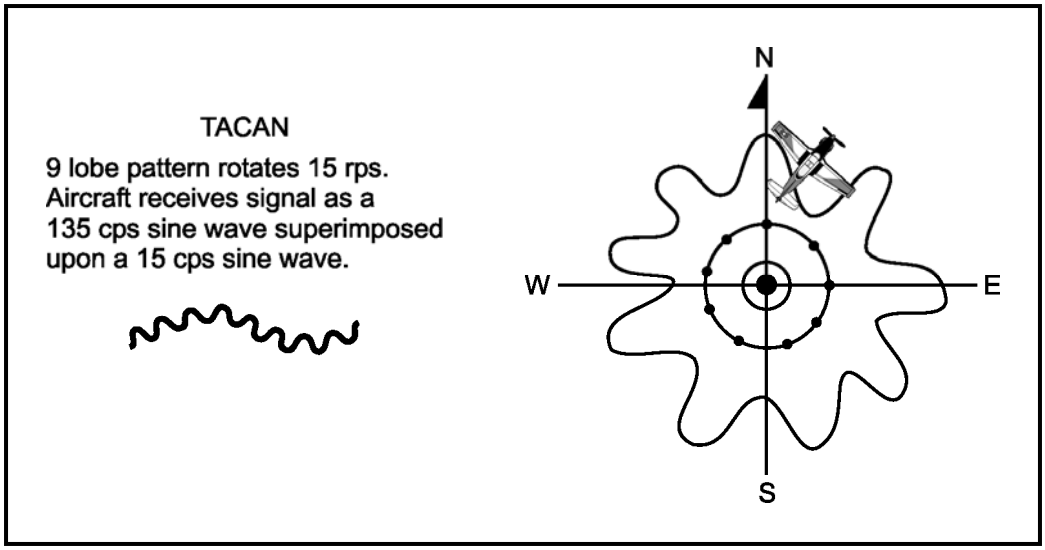

Figure 1-12 Fine Azimuth Pattern

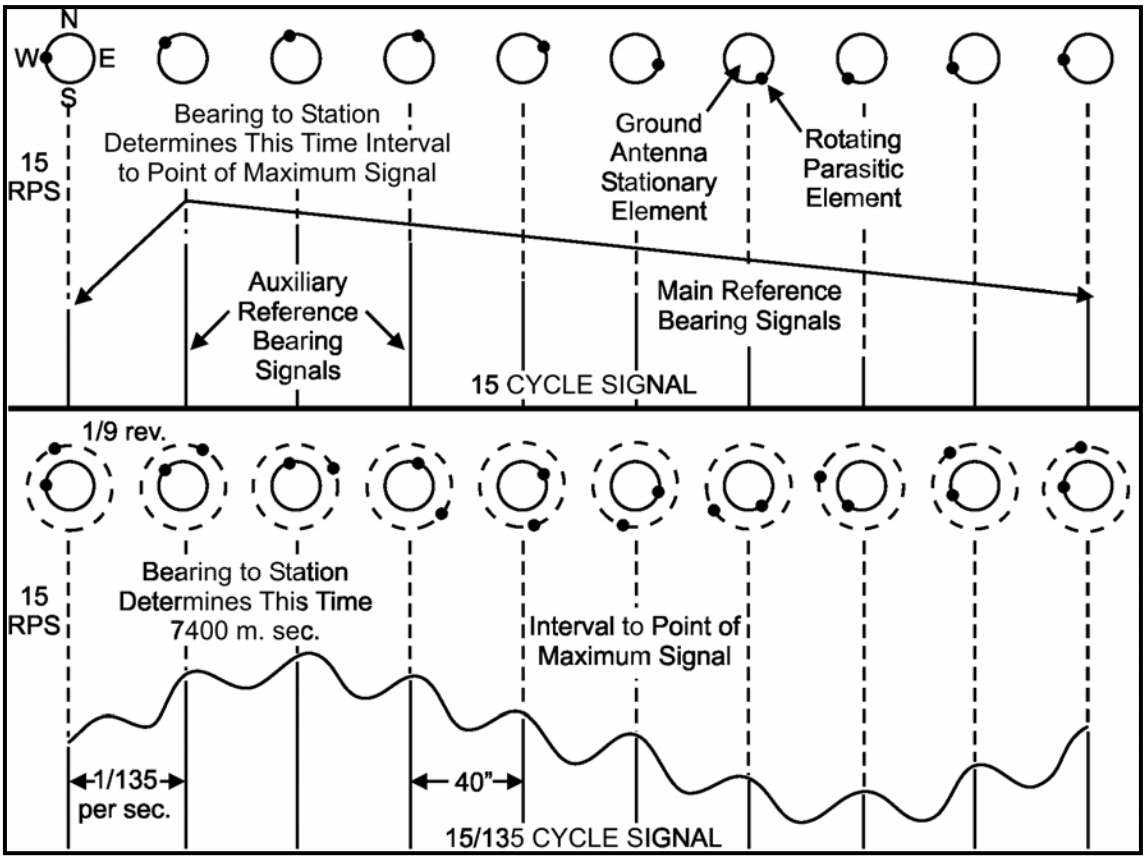

Figure 1-13 Combination of Signal Received by Aircraft

Distance Measuring Equipment

Distance between the aircraft and the ground station is determined with DME by measuring the elapsed time between transmission of interrogating pulses of the airborne set and reception of corresponding reply pulses or the ground station (Figure 1-14). The aircraft transmitter starts the process by sending out the distance interrogation pulse signals. Receipt of these signals by the ground station receiver triggers its transmitter, which sends out the distance reply pulse signals. These pulses require approximately 12 microseconds round trip travel time per nautical mile of distance from the ground beacon. The range indicator displays slant-range distance (Figures 1-15 and 1-16) to the TACAN beacon in NM. Since a large number of aircraft could be interrogating the same beacon, any particular airborne set must sort out only the pulses, which are replies to its own interrogations. Interrogation pulses are transmitted on an irregular, random basis by the airborne set, which then "searches" for replies synchronized to its own interrogations. If the signals are interrupted, a memory circuit maintains the last distance indication on the range indicator for approximately 10 seconds to prevent the search operation from recurring. The searching process starts automatically 10 seconds after the airborne set is tuned to a new beacon or when there is a major interruption in beacon signals. Depending upon the aircraft's actual distance from the beacon at the time, the searching process may require up to 22 seconds.

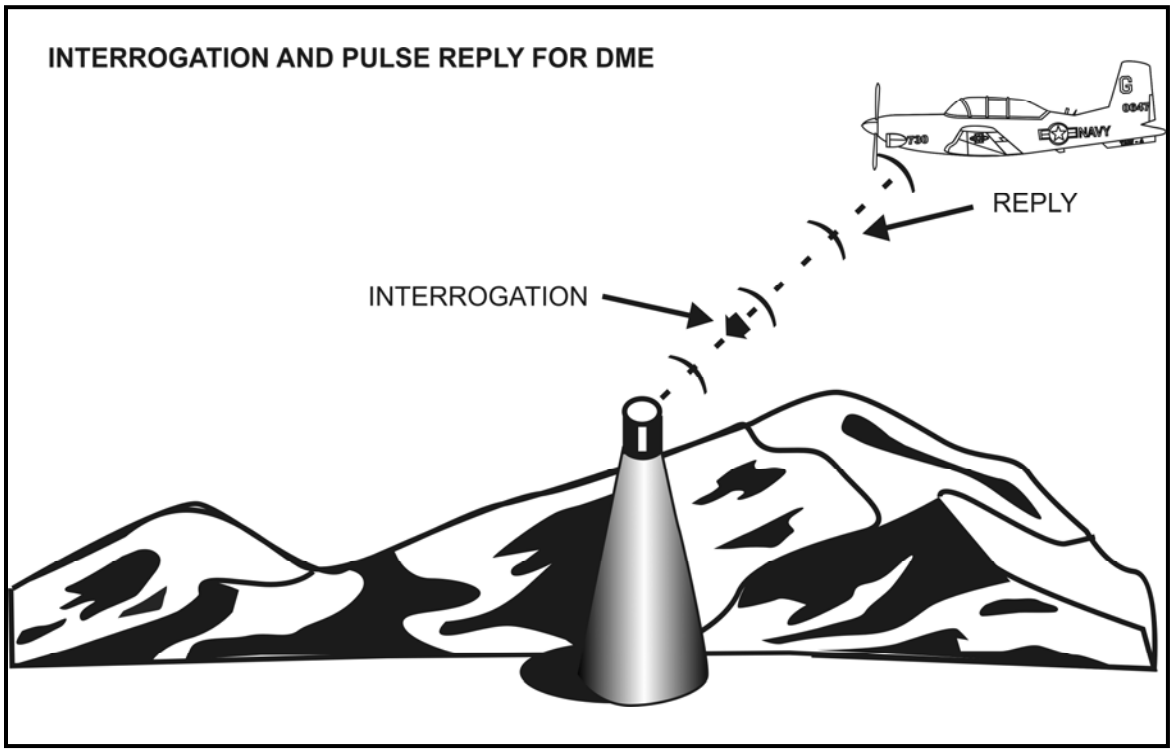

Figure 1-14 DME Principles

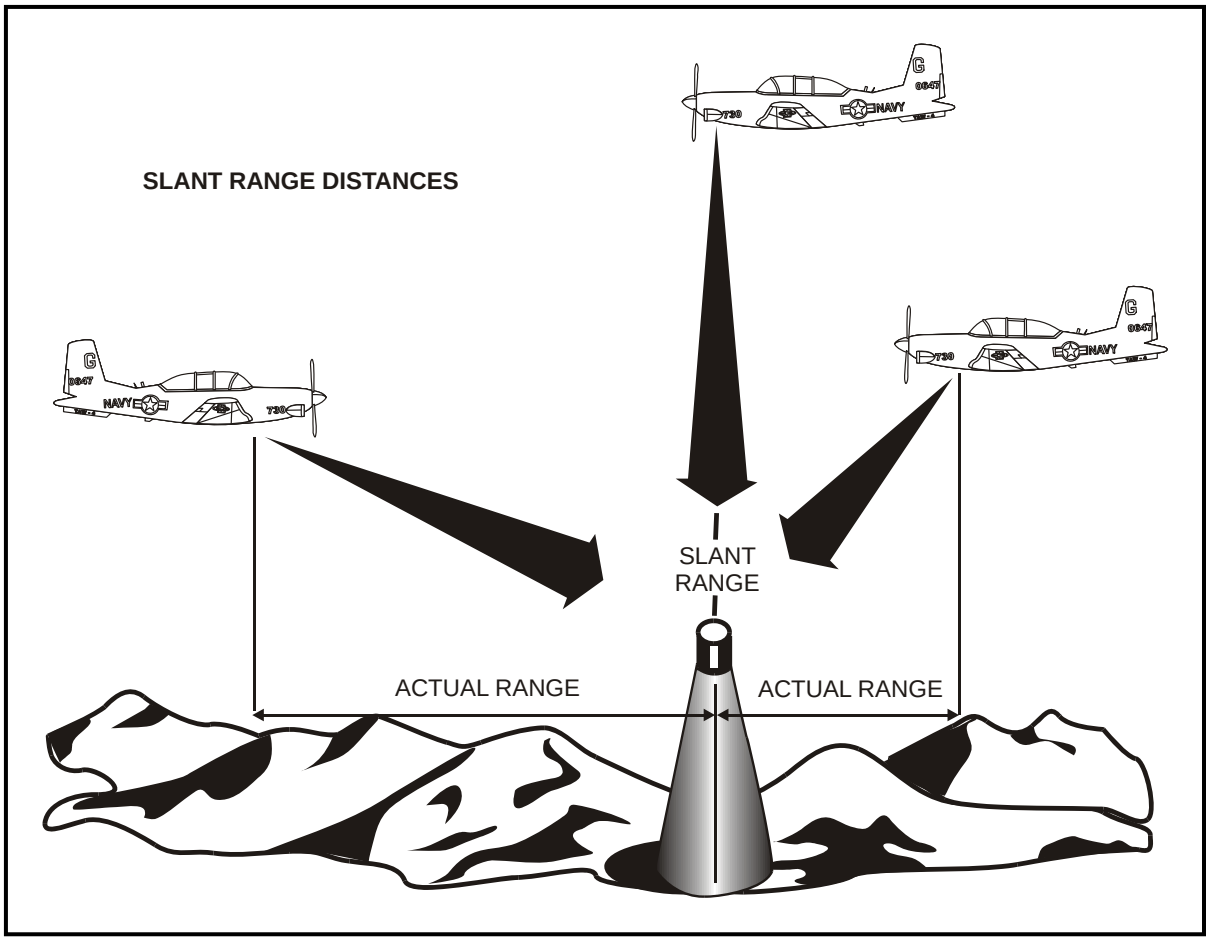

Figure 1-15 DME Distances

108. TACAN CHARACTERISTICS

1. Bearing/distance unlock. TACAN bearing and distance signals are subject to line-of-sight restrictions because of their utilization of UHF frequencies. Because of the transmission/ reception principles, unlock (indicated by rotating of bearing pointer and/or range indicator) will occur if these signals are obstructed. Temporary obstruction of TACAN signals can occur in flight when aircraft fuselage, wing, gear; external stores, or wingmen get between the ground and the aircraft antenna. Aircraft receiver memory circuits prevent unlock for short periods (approximately 10 seconds for DME and 2 seconds for azimuth). But beyond this, unlock occurs and will persist until the obstruction is removed and search cycles are completed. Unlock may occur during maneuvers, such as procedure turns, which cause the aircraft antenna to be obstructed for longer than 2 to 10 seconds.

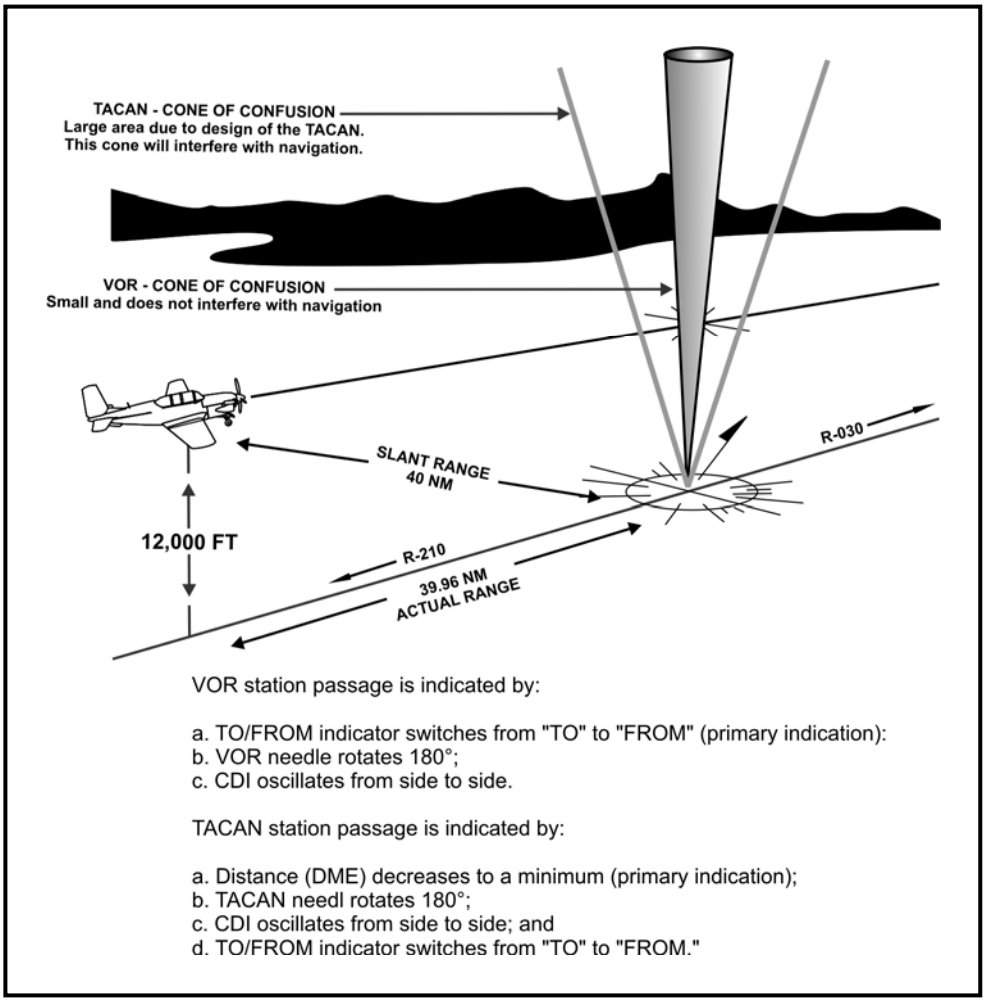

Figure 1-16 TACAN Characteristics

2. Azimuth cone of confusion. The structure of the azimuth cone of confusion over a TACAN station (Figure 1-16/1-17) is considerably different from other NAVAIDs. The azimuth cone can be up to 100º or more in width (approximately 15 NM wide at 40,000 feet). Indications on the aircraft instruments make it appear even wider. Approaching the TACAN station, usable azimuth information is lost before the actual cone is reached. This is correct even though actual azimuth unlock is prevented by the memory circuit until after the aircraft has entered the cone. After the cone is crossed and usable signals are regained, the search cycle extends the unusable area beyond the actual cone. **Only azimuth information is unusable in the cone of confusion; slant range distance information continues to be displayed on the range indicator.**

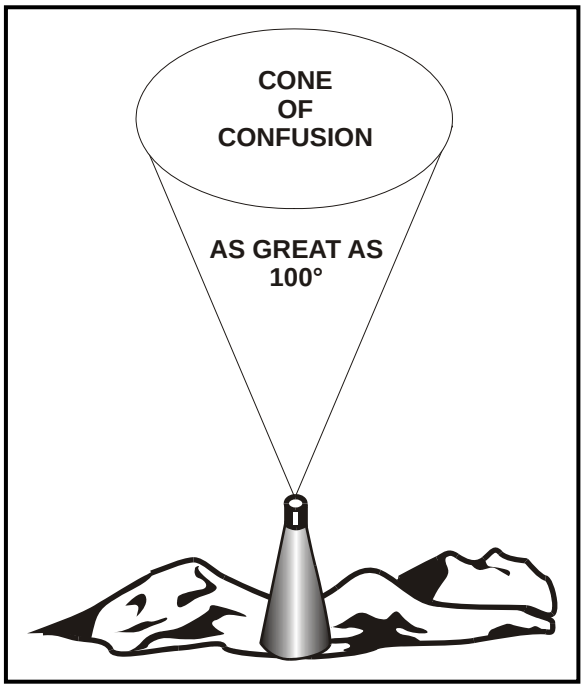

Figure 1-17 TACAN Azimuth Cone of Confusion

3. Range indicator fluctuations. Slight oscillations up to approximately ¼ NM are normal for range indicator operation. When a usable signal is lost, the memory circuit maintains the indicated range for about 10 seconds. If the signal is regained during this period, the indicator will "jump" to the correct reading.

4. Erroneous TACAN indications. Several forms of malfunction of airborne equipment or interference between ground stations can give false or erroneous TACAN navigational information to an aviator. These discrepancies are easier to recognize and guard against if the aviator is aware they can occur. The more common erroneous indications are:

a. A 40º azimuth error lock-on/lock-off. The construction of the TACAN ground antenna is such that it transmits a series of nine signal lobes (eight auxiliary and one main reference pulse) 40º apart. With the airborne receiver working correctly, the main reference pulse (which occurs when the peak of the rotating cardioid pattern is at the 90º magnetic direction) locks on at the 90º slot of the receiver. With a weak airborne receiver, the reference pulse may "slide over" or miss the 90º slot and lock on at one of the auxiliary positions. When this occurs, azimuth indications will be 40º or some multiple of 40º in error. Rechanneling (retuning) the airborne receiver to deliberately cause unlock may cause the receiver to lock on properly. When other bearing information such as VOR or ADF is available, it should be used to verify the position periodically. This type error is unusual, but possible in present day TACAN sets.

b. Co-channel interference. Co-channel interference occurs when an aircraft is in a position to receive TACAN signals from more than one ground station on the same frequency. Normally this occurs only at very high altitudes when distance separation between like frequencies is inadequate. DME, azimuth, or identification from either ground station may be received. This is not a malfunction of either air or ground equipment, but a result of interfering signals of two ground facilities.

c. False or incorrect lock-on. False or incorrect lock-on indications in the aircraft can be caused by misalignment or excessive wear of the airborne crystal selector assembly. Selection of a numbered TACAN channel activates a drum and wiper arrangement which rotates until the wiper contacts the proper crystal on the drum. These crystal contact points are very small and close together. Wear or misalignment can cause the wiper to miss the proper crystal and contact the wrong one. This can result in no station being tuned in or the wrong station. When this occurs, rechanneling of the receiver may result in the correct channel being selected.

5. Precautionary actions. The following precautionary actions should be taken to guard against in-flight use or erroneous navigational signals:

a. ALWAYS check the identification of any NAVAID station and monitor it during flight.

b. ALWAYS use all suitable navigational equipment aboard the aircraft and cross-check heading and bearing information.

c. NEVER overfly preplanned estimated time of arrivals without careful cross-check of NAVAIDs and ground checkpoints.

d. CHECK Notices to Airmen (NOTAMs) and Flight Information Publication (FLIP) before flight for possible malfunctions or limitations on NAVAIDs to be used.

e. DISCONTINUE USE of any suspect NAVAID and confirm aircraft position with radar or other equipment.

109. GLOBAL POSITIONING SYSTEM (GPS)

GPS navigation has become an integral part of IFR enroute, terminal, and approach operations. The GPS receiver used in the T-34C is the KLN900.

Figure 1-18 KLN-900 Control Panel

GPS is a United States satellite-based radio navigational, positioning, and time transfer system operated by the Department of Defense (DOD). The system provides highly accurate position and velocity information and precise time on a continuous global basis to an unlimited number of properly equipped users. The system is unaffected by weather and provides a worldwide common grid reference system based on the earth-fixed coordinate system. For its earth model, GPS uses the World Geodetic System of 1984 (WGS-84) datum.

GPS provides horizontal positioning accuracy of 22 meters and a vertical accuracy of 27.7 meters (depending on the model and mode of GPS used).

GPS operation is based on the concept of ranging and triangulation from a group of satellites in space, which act as precise reference points. A GPS receiver measures distance from a satellite using the travel time of a radio signal. Each satellite transmits a specific code, called a Course/Acquisition (CA) code, which contains information on the satellite's position, the GPS system time, and the health and accuracy of the transmitted data. Knowing the speed at which the signal traveled (approximately 186,000 miles per second) and the exact broadcast time, the distance traveled by the signal can be computed from the arrival time.

The GPS receiver matches each satellite's CA code with an identical copy of the code contained in the receiver's database. By shifting its copy of the satellite's code in a matching process, and by comparing this shift with its internal clock, the receiver can calculate how long it took the signal to travel from the satellite to the receiver. The distance derived from this method of

computing distance is called a pseudo-range because it is not a direct measurement of distance, but a measurement based on time. Pseudo-range is subject to several error sources such as ionospheric and tropospheric delays and multipath errors.

In addition to knowing the distance to a satellite, a receiver needs to know the satellite's exact position in space; this is known as its ephemeris. Each satellite transmits information about its exact orbital location. The GPS receiver uses this information to precisely establish the position of the satellite.

Using the calculated pseudo-range and position information supplied by the satellite, the GPS receiver mathematically determines its position by triangulation. The GPS receiver needs at least four satellites to yield a three-dimensional position (latitude, longitude, and altitude) and time solution. The GPS receiver computes navigational values such as distance and bearing to a waypoint, groundspeed, etc., by using the aircraft's known latitude/longitude and referencing these to a database built into the receiver.

The GPS constellation of 24 satellites is designed so that a minimum of five are always observable by a user anywhere on earth. The receiver uses data from a minimum of four satellites above the mask angle (the lowest angle above the horizon at which it can use a satellite).

The GPS receiver verifies the integrity (usability) of the signals received from the GPS constellation through RAIM to determine if a satellite is providing corrupted information. At least one satellite, in addition to those required for navigation, must be in view for the receiver to perform the RAIM function; thus RAIM needs a minimum of five satellites in view, or four satellites and a barometric altimeter (baro-aiding) to detect an integrity anomaly. For receivers capable of doing so, RAIM needs six satellites in view (or five satellites with baro-aiding) to isolate the corrupt satellite signal and remove it from the navigation solution. Baro-aiding is a method of augmenting the GPS integrity solution by using a non-satellite input source. GPS derived altitude should not be relied upon to determine aircraft altitude since the vertical error can be quite large. To ensure baro-aiding is available, the current altimeter setting must be entered into the receiver as described in the operating manual.

RAIM messages vary somewhat between receivers; however, generally there are two types. One type indicates there are not enough satellites available to provide RAIM integrity monitoring and another type indicates the RAIM integrity monitor has detected a potential error exceeding the limit for the current phase of flight. Without RAIM capability, the pilot has no assurance of the accuracy of the GPS position.

The DOD declared Initial Operational Capability (IOC) of the U.S. GPS on December 8, 1993. The Federal Aviation Administration (FAA) has granted approval for U.S. civil operators to use properly certified GPS equipment as a primary means of navigation in oceanic airspace and certain remote areas. Properly certified GPS equipment may be used as a supplemental means of IFR navigation for domestic enroute, terminal operations, and certain Instrument Approach Procedures (IAP). This approval permits the use of GPS in a manner consistent with current navigation requirements as well as approved air carrier operations specifications.

1-24 INTRODUCTION TO AIRBORNE NAVIGATION AND COMMUNICATIONS EQUIPMENT AND PRINCIPLES OF OPERATION

110. TRANSPONDER

ATC has been greatly improved with the introduction of radar. However, the age-old problem of distinguishing individual aircraft remained. This problem of identification led to the development of a transponder, which permitted aircraft to identify themselves using a discrete code. The Collins TDR-950 is installed in the T-34C.

The theory of operation is similar to TACAN. With TACAN DME, the aircraft computes distance by interrogating a ground station, which in turn replies. The transponder, however, does just the reverse. A ground facility, such as an Air Route Traffic Control Center, interrogates the aircraft's transponder, which in turn replies with its radar identification code, previously set by the pilot.

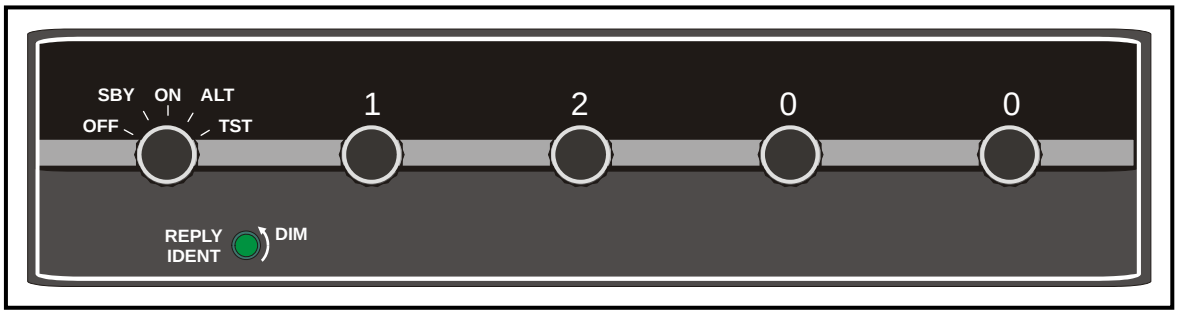

Figure 1-19 Transponder Control Panel

The transponder has two separate modes of operation. They are Mode 3 (known as Mode A in civilian aircraft) and Mode C. When using Mode 3, a pilot will be assigned a four-digit number, "squawk" or "code." The transponder is a 4096 code transponder, which means it can reply on any one of 4096 discrete codes that can be assigned by ATC.

NOTE

> 7 is the largest number found on the transponder.) A discrete code gives an aircraft a radar "fingerprint" and is manually selected by the pilot. Even on VFR flights, pilots who are held in radar contact by ATC can receive traffic advisory information.

Some codes have been reserved for special uses. Code 1200 can be used by any aircraft flying VFR. Code 7700 has been reserved to alert ATC that the pilot is declaring an emergency. Code 7600 is reserved for aircraft experiencing two-way radio failures. Code 7500 is used to indicate that the aircraft is being hijacked.

In airspace over the continental United States above 10,000 feet Mean Sea Level (MSL), excluding airspace at and below 2500 feet AGL, aircraft are required to have a transponder that is equipped with automatic altitude reporting capability (Mode C). This system is independent of aircraft altimeter settings, transmits the aircraft's pressure altitude (referenced to 29.92) with reference to MSL ±300 feet to the interrogating radar ground station. Transponders substantially

increase the capability of radar to see an aircraft, and Mode C enables the controller to rapidly determine potential traffic conflicts.

The transponder has a five position function switch (Figure 1-19):

1. OFF

2. SBY – STANDBY

3. ON

4. ALT – ALTITUDE

5. TST – TEST

The OFF position disconnects the unit from the aircraft power supply. In the STANDBY position, electrical power is applied, but the set is not emitting a signal. In the ON position, only the Mode 3 (identification) portion of the transponder is operational. In the ALTITUDE position, both Mode 3 and Mode C are operational. In the TEST position, the pilot can confirm proper operation of the transponder if the REPLY light illuminates. The reply light also serves as the IDENT button. The IDENT feature allows the controller to quickly distinguish a specific aircraft from the other aircraft on his radarscope. When a pilot pushes the IDENT button, the target the controller sees will become highlighted and begin to flash.

111. BEARINGS, RADIALS, AND COURSES

Prerequisite to the study of the RMI, and the CDI, the student aviator must thoroughly understand three terms basic to determining horizontal direction from a fixed geographical point. The three terms are bearing, radial, and course. A bearing is used to measure the horizontal direction to or from a NDB. For example: the 090 bearing "FROM" a NDB facility originates at the facility and extends eastward (Figure 1-20). The 090 bearing "TO" a NDB facility originates west of the facility and extends eastward, terminating at the facility. To eliminate the confusion of bearing "TO" and bearing "FROM," ATC controllers will use the terms **"COURSE TO"** and **"BEARING FROM"** a facility.

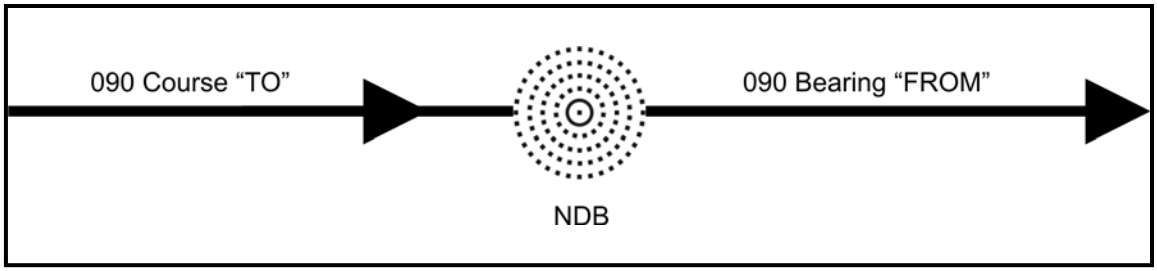

Figure 1-20 Course "TO" and Bearing "FROM"

A radial is a magnetic bearing that extends **from** a VOR, VORTAC, or TACAN station. Each VOR, VORTAC, or TACAN has 360 radials extending from it. An aircraft using a VOR for instrument navigation is always on one of the 360 radials extending from that station.

Example:

The 090 radial originates at the facility and extends east. If an aircraft is due east of the facility, then the aircraft is on the 090 radial. Another example is illustrated by Figure 1-21. In this case the aircraft is on the 210 radial heading toward the station.

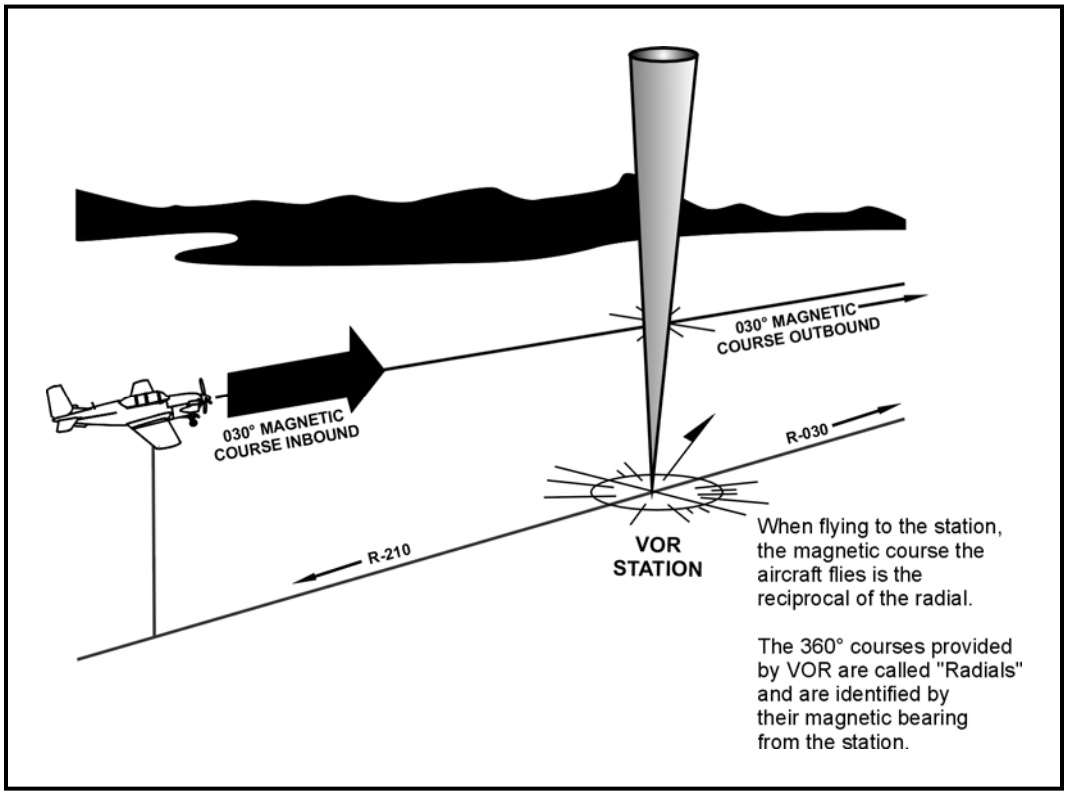

Figure 1-21 VOR Navigation

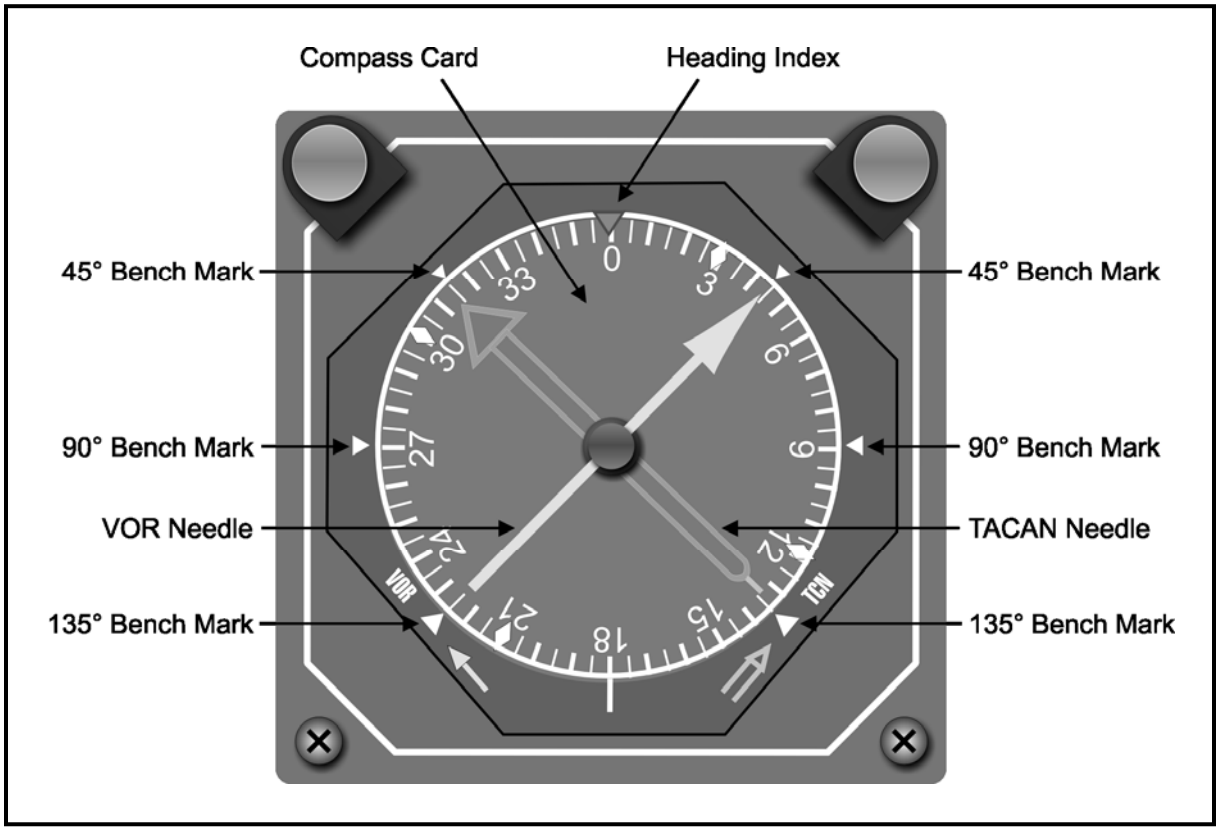

Figure 1-22 Radio Magnetic Indicator (RMI)

A course is the **intended** direction of flight or path over the ground measured in degrees. If an aircraft is on the 180º radial and is tracking (actual path across the ground) inbound to the station, the course would be 360º. If that same aircraft were tracking outbound from the station on the 180º radial, the course would be 180º. When outbound from a station, the course and radial are the same, and when inbound to a station, the course is the reciprocal of the radial. Radial and course information are displayed on the RMI and CDI in the T-34C.

112. RADIO MAGNETIC INDICATOR

The RMI is a navigation instrument that displays aircraft heading and radial information. It consists of a rotating compass card and two bearing pointers, one for the VOR and one for the TACAN or GPS as selected by the (KA41) Annunciator/Control Panel. The aircraft's magnetic heading is displayed on the compass card **beneath the heading index**. The remaining marks around the compass card are called bench markers. Bench markers divide the compass card into 45º segments and are referred to by their relation to the heading index (Figure 1-22).

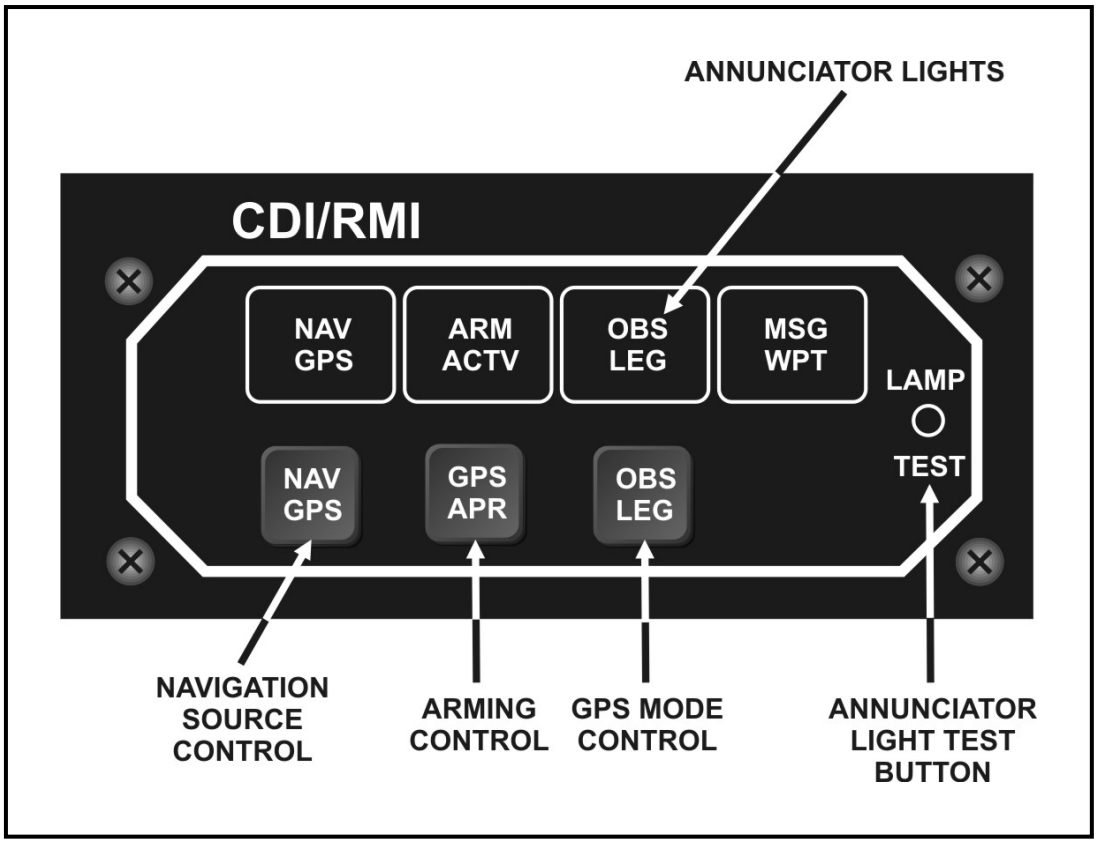

Figure 1-23 KA41 Annunciator/Control Panel

NOTE

Although the compass card appears to rotate when the aircraft is turning, it is actually the aircraft turning around the card. When making a right turn, the card **appears** to rotate to the left and to the right for a left turn. Headings will increase numerically when turning right and decrease when turning left.

The TACAN, or No. 2 needle on the RMI, is used to display radial information from a TACAN navigation facility. The aircraft's TACAN receiver electronically measures the magnetic bearing from the station. The head of the TACAN needle indicates the magnetic course to the facility, and the tail indicates the magnetic bearing from the facility. Remember that a magnetic bearing from a facility is the definition of a radial, so the tail of the TACAN needle will always indicate the radial the aircraft is on. Use the TACAN needle when referring to the following examples (Figure 1-24).

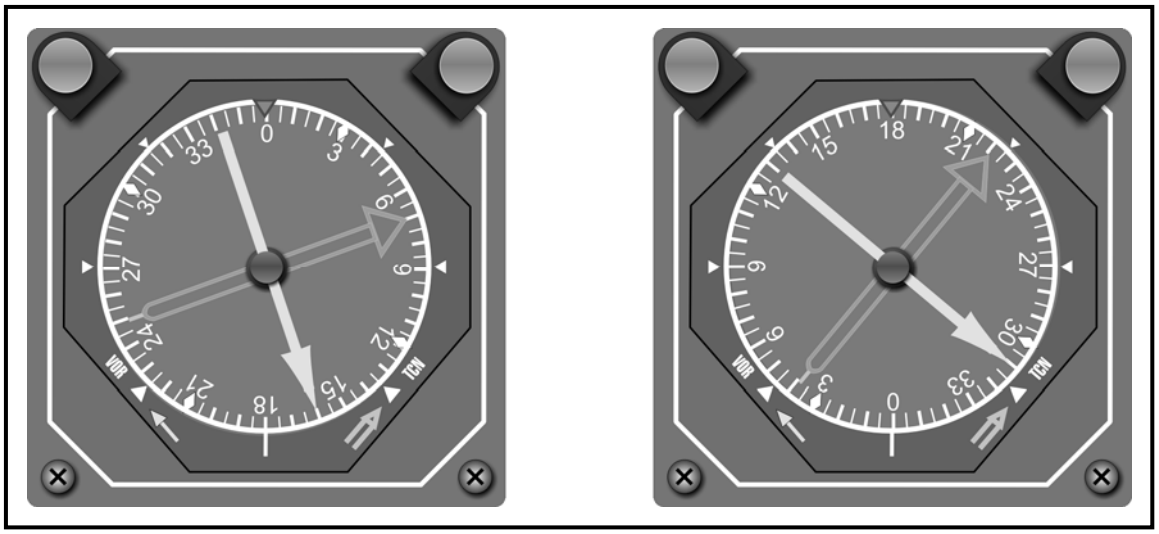

Figure 1-24 RMI Example A and Example B

In example A, the aircraft is on the 250 radial. The magnetic course to the facility is 070º. A turn to a magnetic heading of 070º, placing the head of the TACAN needle at the top of the RMI, will take the aircraft to the facility. In example B, the magnetic course to the facility is 220. The aircraft is on the 040 radial and heading 180º magnetic.

The VOR needle on the RMI is used to display radial information from a VOR facility. The head of the VOR needle indicates the magnetic course to the VOR station and the tail indicates the radial from the VOR station.

There are two methods which can be used to fly to a TACAN or VOR station. For the first method, simply turn the aircraft to place the head of the needle under the heading index of the RMI and "follow" it to the station. This is known as **homing**. The one disadvantage to this method is that if a crosswind exists, the aircraft will fly a curved path to the station (Figure 1-25). The severity of the curve increases as distance from the station or crosswind component increases.

Homing should only be used when close to the station.

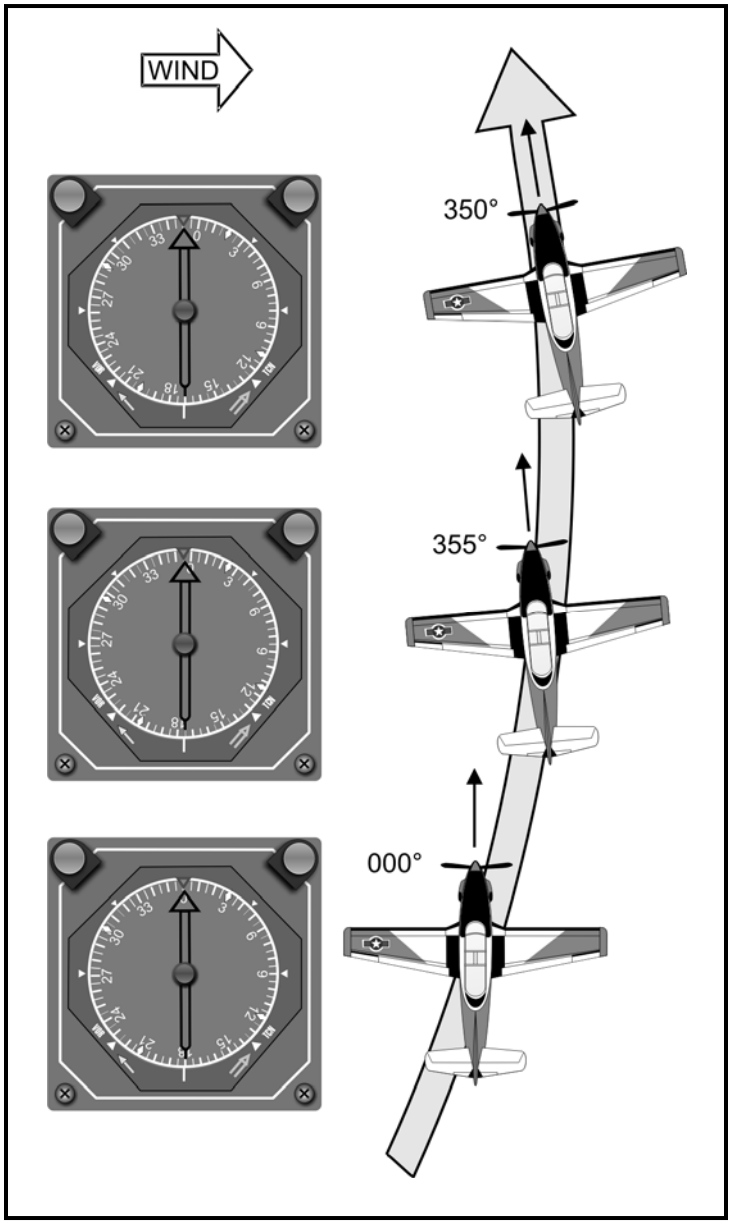

Figure 1-25 Homing

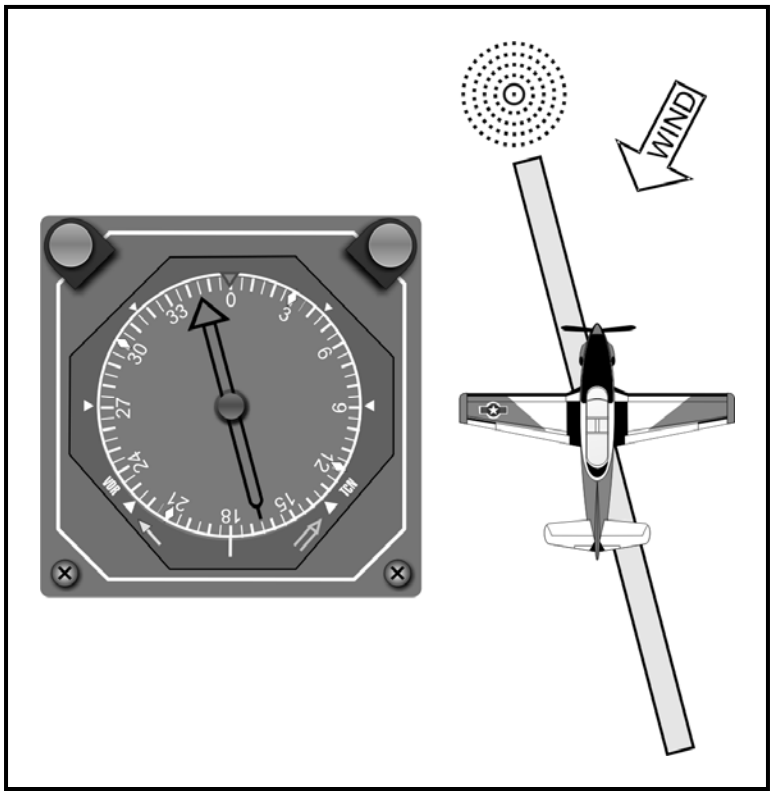

Figure 1-26 Tracking

The second method is called tracking. Tracking consists of maintaining a straight path or course over the ground. In order to do this, the aircraft must turn slightly into the wind. When using this method, the needle will not normally be under the heading index but slightly to one side (Figure 1-26).

When the compass card is known or suspected to be malfunctioning, the VOR and TACAN needles must be considered unreliable until verified by other means. In this situation, the VOR and TACAN needles will not point toward the VOR or TACAN facility (relative bearing) but may still indicate proper magnetic bearing information. In other words, these needles provide bearing information in relation to the compass card, not the aircraft heading.

113. COURSE DEVIATION INDICATOR

The CDI displays radial information received by the aircraft's VOR or TACAN receiver (Figure 1-26). The CDI indicates the aircraft's position in relation to the selected course. A toggle switch on the instrument panel above the CDI marked VOR-TACAN allows the pilot to select either the VOR or the TACAN navigation system as the source of information displayed on the CDI. For VOR or TACAN use the GPS Annunicator/Control Panel, which must be set to the NAV position.

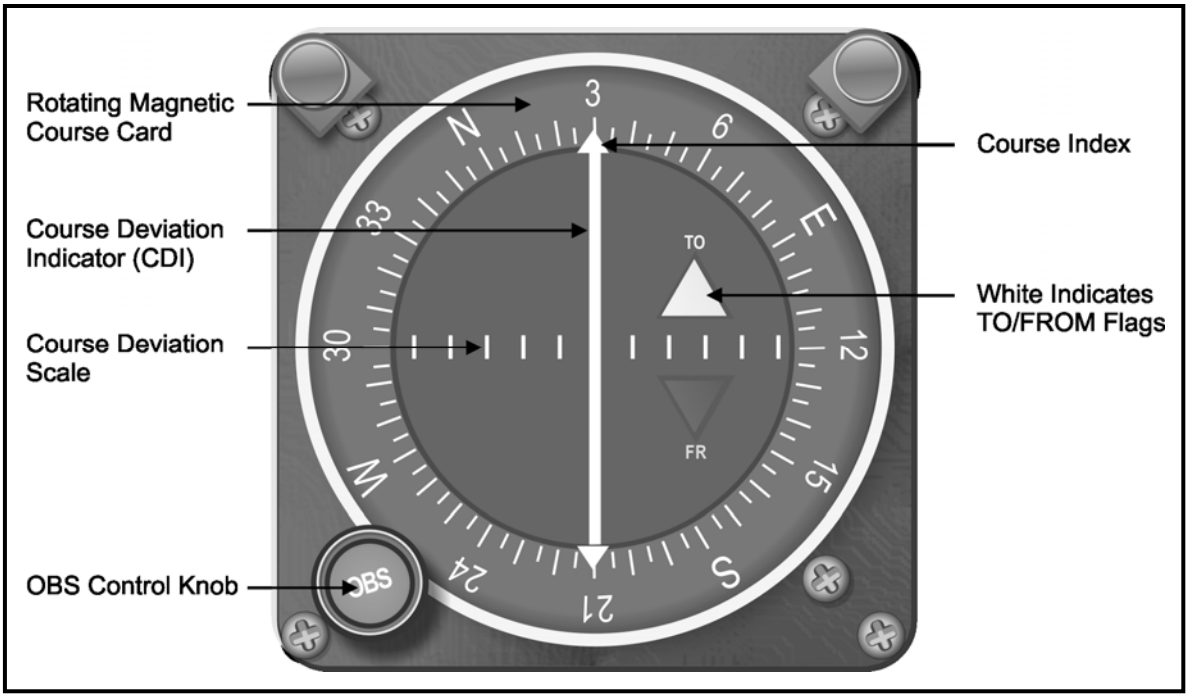

Figure 1-27 IND-350

CDI Orientation (VOR/TACAN)

The desired course is set at top of the CDI using the OBS knob. The course set, **if flown**, will take the aircraft either TO or FROM the NAVAID as indicated by the TO/FROM flags on the right side of the CDI. It does **not** otherwise indicate whether the aircraft is heading to or from the NAVAID. As previously explained, the course from a NAVAID is the same as the radial and the course to a NAVAID is the reciprocal of the radial. Therefore, with a FROM flag (bottom flag), the desired course and radial are in the top of the CDI. With a TO flag (top flag), the course is at the top of the CDI and the radial is indicated at the bottom of the CDI. Simply stated, the desired course is always set in the top of the CDI but the radial is opposite the indicator flag, the first part of what is commonly referred to as the “opposite/opposite” rule. The second part of the rule applies to the deviation marks either side of center. The amount of lateral displacement from the desired radial will be indicated in degrees of course deviation to the right or left of center, with each mark indicating two degrees when used with in conjunction with a VOR or TACAN. Since the aircraft is the center of the CDI, the CDI needle represents the

radial. If the needle is to the right side then the aircraft is to the left of the radial, hence "opposite/opposite". Another way to remember course and radial is the "To-From" method. With a TO flag, there are TWO numbers to consider – course at the top and radial at the bottom of the CDI. With a FROM flag (point to the NAVAID over your shoulder with your thumb) there is only ONE number to deal with, course and radial are the same and both are at the top of the CDI.

When the VOR is tuned to a localizer frequency and the VOR-TACAN switch in the VOR position, the CDI indicates 0.5° of deviation per mark.

The CDI functioning when used in conjunction with the GPS varies with the mode selected; refer to the T-34 NATOPS Manual for an explanation of GPS operations.

In review, a radial is one of **360 magnetic** bearings, which radiate from a VOR or TACAN facility and the radial the aircraft is on is indicated by the tail of the VOR/TACAN needle. Review Figure 1-28.

NOTE

For GPS Operations with the CDI see T-34 NATOPS for specific information.

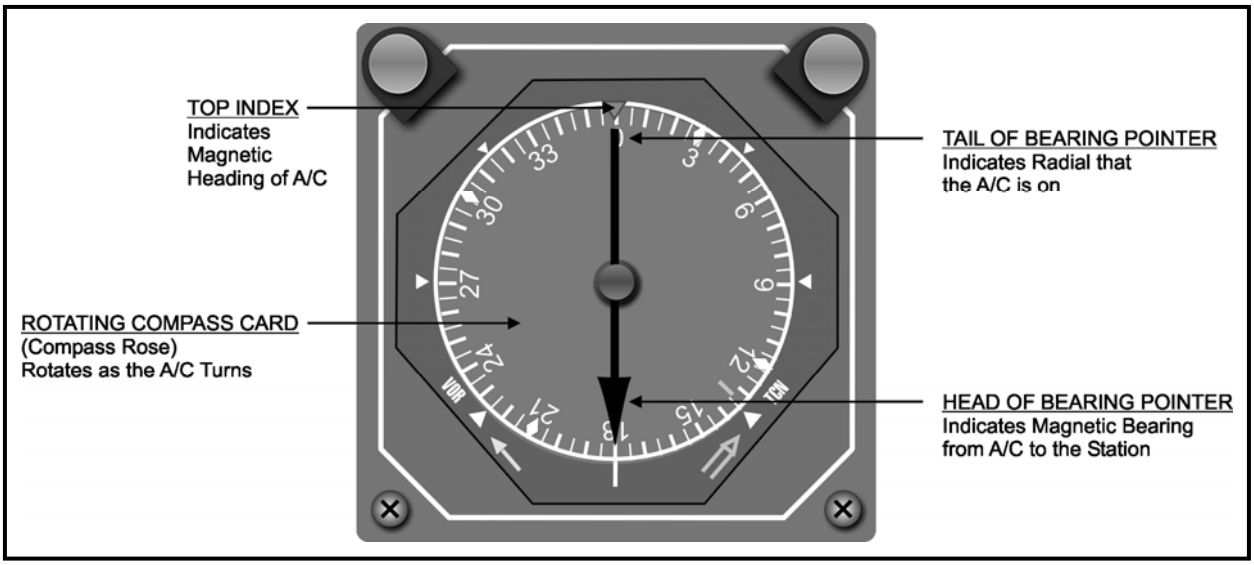

Figure 1-28 Radio Magnetic Indicator (RMI)

Here is a technique that will aid in orienting yourself using the RMI:

1. Place an imaginary aircraft on the **tail** of the VOR/TACAN needle with its nose pointed to the top of the instrument. Do this when you look at the tail of the VOR/TACAN needle to determine your radial (Figure 1-29).

2. Imagine the VOR or TACAN station being at the center of the RMI.

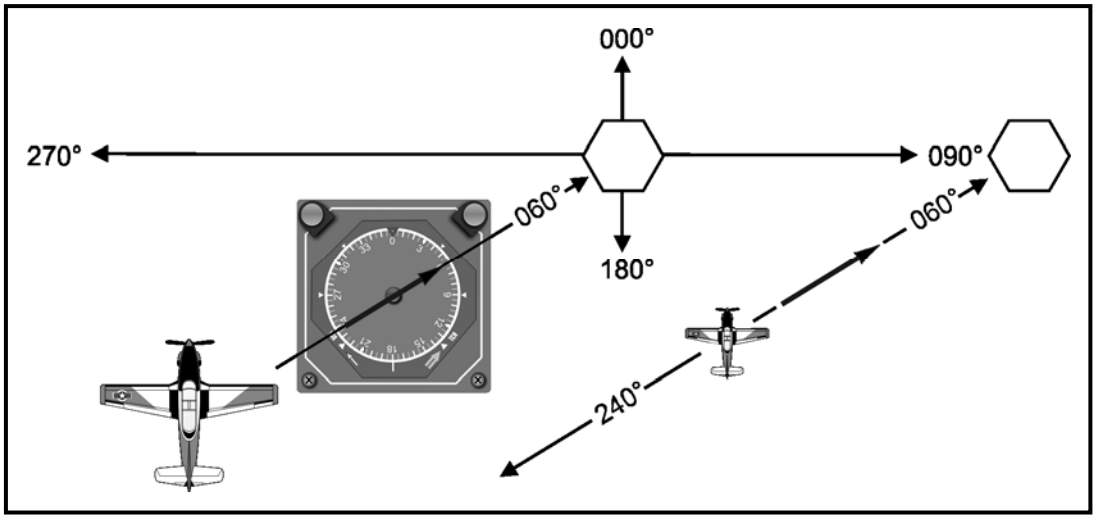

Figure 1-29 RMI Orientation Technique

114. NAVIGATION FIXES

While navigating with a VOR, a pilot can know the aircraft's magnetic direction from a VOR facility, but the only time the pilot will know his/her exact geographical position is when directly over the station. However, by using two VOR facilities, the pilot can define a navigational fix by the intersection of two radials from the VORs.

Since TACAN provides course and distance information from a station, a pilot has the information needed for precise fixing of position at all times. A TACAN fix is defined as a radial and distance from a TACAN station.

In Figure 1-29, the fix is on the TACAN's 090 radial at 20 DME.

Figure 1-30 TACAN Fix

115. CHAPTER ONE REVIEW QUESTIONS

1. Label the following frequencies kHz or MHz:

   324 _____ 324.0 _____ 124.0 _____ 124 _____

2. The ADF radios operate in the _____/_____ frequency range which runs from _____to _____ kHz.

3. The frequency range of the VOR receiver is _____ to _____ MHz which is in the _____ range.

4. The TACAN radio has _____ and _____ channels.

5. With the function switch of the TACAN radio in the STBY position, you will _____.

   a. receive "distance" on a TACAN station

   b. receive "magnetic bearing" on a TACAN station

   c. both a and b above

   d. find your way to a VOR station

6. To monitor GUARD, the function switch on the UHF radio must be in the _____ position.

7. The UHF radio frequency range is _____ to _____ MHz.

8. Can the UHF radio in the T–34C be used as a UHF homer in the ADF position? _____ Explain your answer.

9. Match the following:

a.	UHF radio	1.	255.4
b.	VOR receiver	2.	Channel 71
c.	TACAN receiver	3.	333.0
d.	Transponder	4.	7600
		5.	115.3
		6.	Channel 120
		7.	Channel 90
		8.	111.25
		9.	4096

10. An aircraft's TACAN radio can only be used for _____, whereas a VOR receiver can be used for _____ and _____.

11. Using Mode 3, the pilot may be assigned any one of the _____codes.

12. The two transponder modes used in ATC are Modes _____and _____.

13. To operate both modes of the transponder, a pilot would select _____.

14. If a pilot is navigating due north of a VOR, what radial is he on? _____

15. If a pilot is NW of a VOR tracking inbound on the 330º, what is his/her course? _____

16. The procedure used to fly a straight line to a facility is called _____.

17. While flying at 1000 feet AGL, reliable navigation information could be received from _____NM from a VOR station.

18. The only reliable navigation information received in the cone of confusion is _____ information. That reading, when directly over the TACAN facility, is called _____.

19. A pilot's primary indication of station passage for a VOR is _____ and for TACAN it is _____.

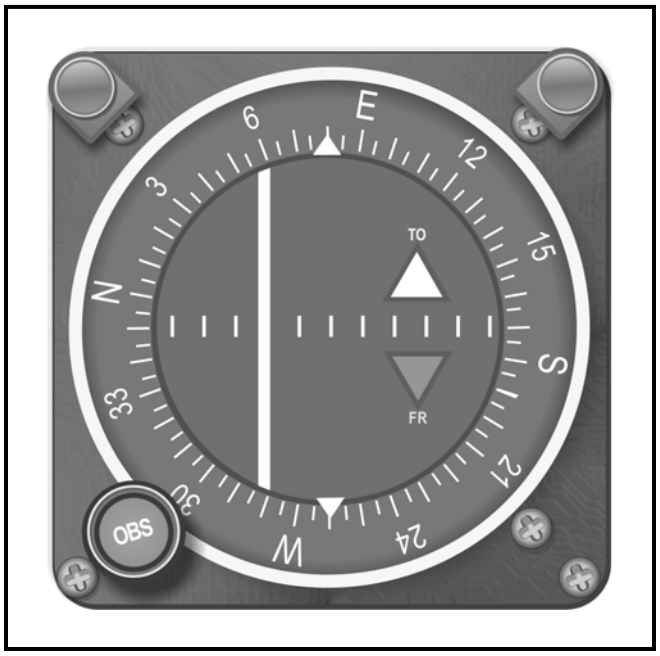

20. In the above diagram, the selected course of 080º will take the aircraft (TO/FROM) the navigation facility. The aircraft is _____º (LEFT/RIGHT) _____ of course. If a course of 080º will take the aircraft to the navigation facility, then the aircraft must be west of the facility.

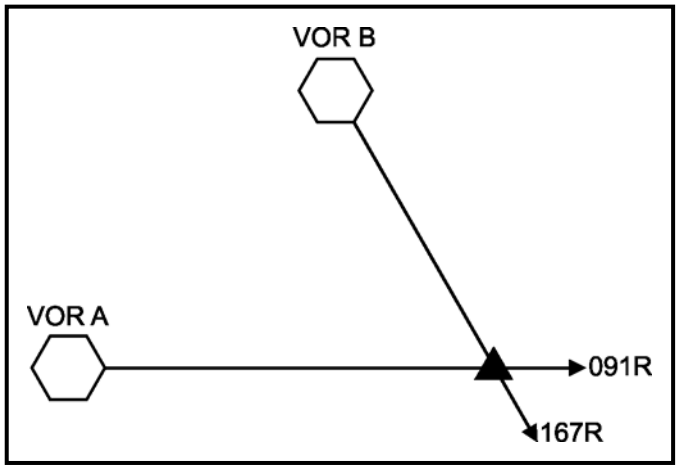

21. In the figure above, the intersection is defined by the _____ radial from VOR A and the _____ radial from VOR B.

22. Note the aircraft position and RMI indication in relation to the VOR station.

    a. 1. What radial is the aircraft on? _____
       2. Magnetic course to the VOR is _____.

    b. If the aircraft continues on its present heading, will it intercept the 270 radial? _____

    c. The aircraft heading is_____.

    d. How many degrees is the VOR station from the nose of the aircraft? _____

    e. If the aircraft continues on its present heading, will it eventually intercept the 330 radial? _____

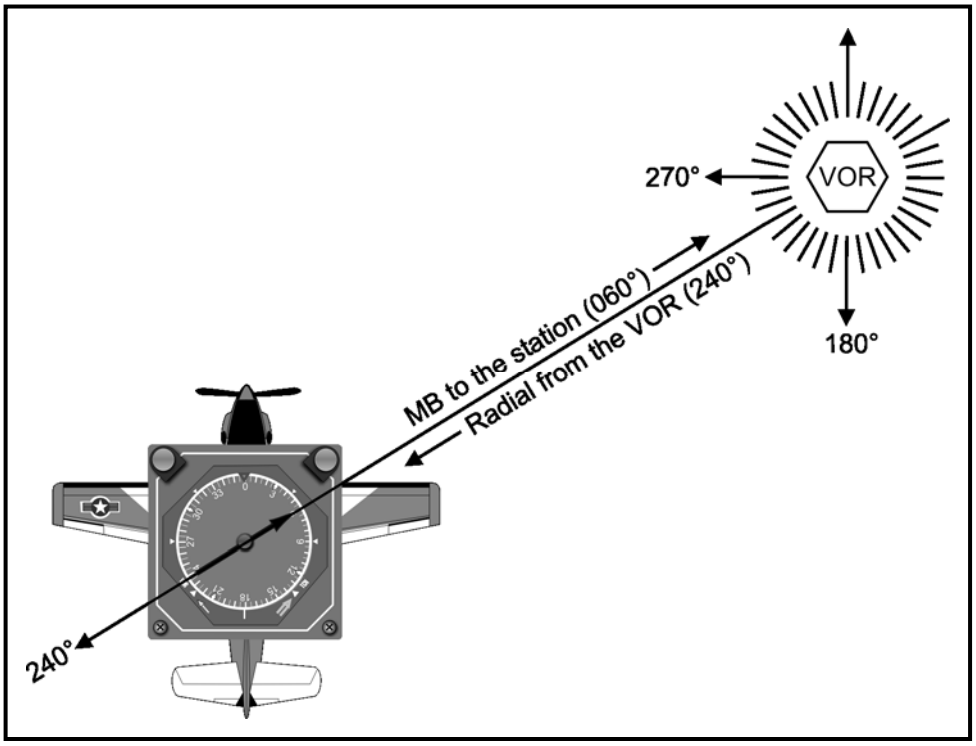

23. The following illustrations show six aircraft at various locations around a VOR station. Match each aircraft with the appropriate RMI shown below.

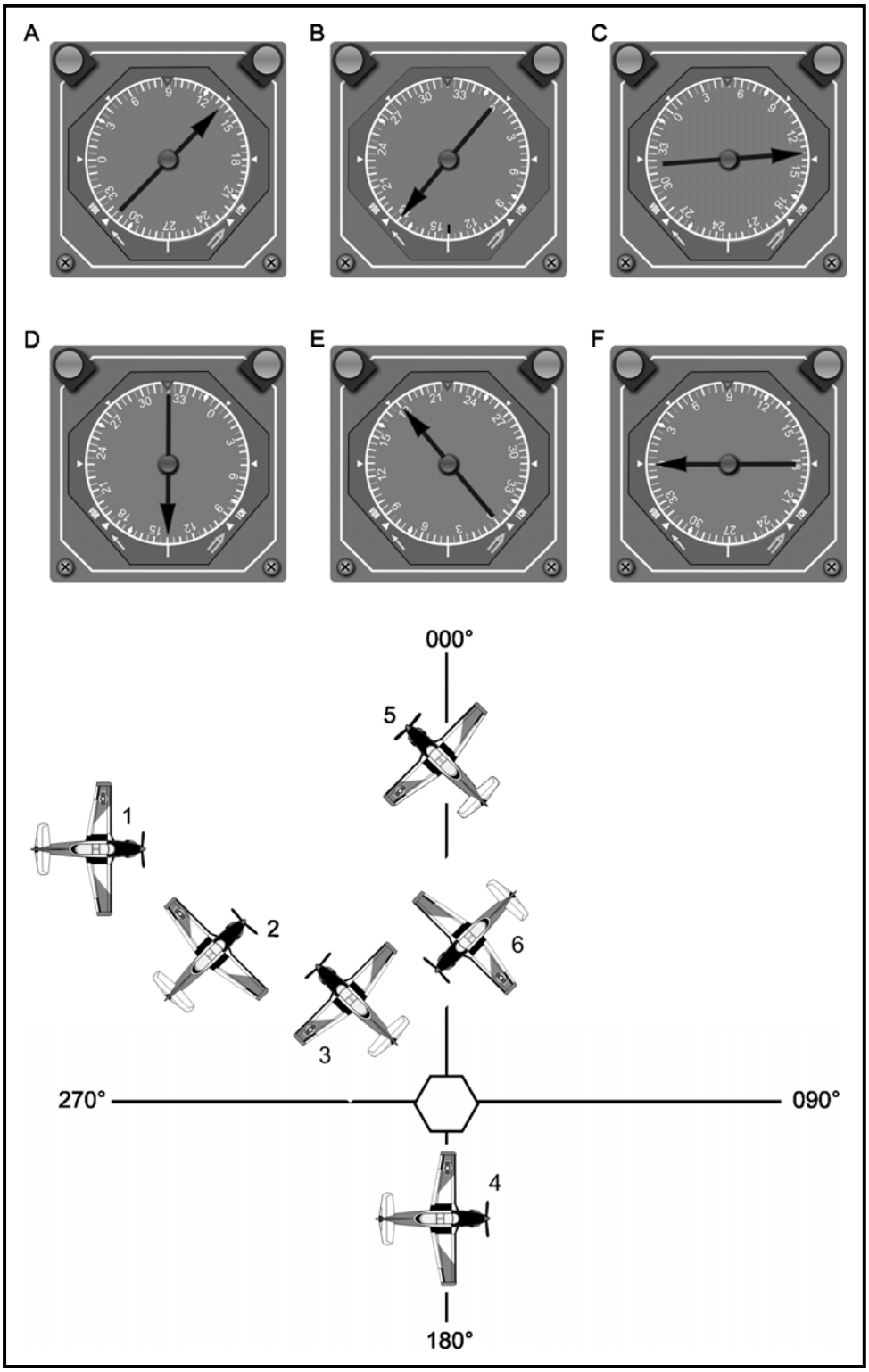

24. At 12,000 feet AGL directly over a VORTAC, what will your DME read? _____

25. GPS is based on how many Satellites? _____

26. What is RAIM? _____

27. How many Satellites are required for a 3 Dimensional Position and Time Solution? _____

116. CHAPTER ONE REVIEW ANSWERS

1. 324 kHz; 324.0 MHz; 124.0 MHz; 124 kHz
2. LF/MF; 100_1750
3. 108.00 to 117.95; VHF
4. 126 X and 126 Y channels
5. b.
6. Both
7. UHF, 225.00; 399.975
8. No; T-34C installation does not utilize ADF.
9. UHF Radio 1, 3

   VOR Receiver 5, 8

   TACAN Receiver 2, 6, 7

   Transponder 4, 9
10. navigation; navigation; voice reception
11. 4096
12. 3; C
13. ALT or ALTITUDE
14. 360
15. 150º
16. tracking
17. 40
18. distance; Minimum DME
19. TO/FROM indicator switches from "TO" to "FROM"; Minimum DME

20. TO; 4; RIGHT

21. 091R; 167R

22. a. 1. 240; 2. 060º

    b. Yes

    c. North/360º ±5

    d. 60º ±5

    e. Yes

23. a. 1; b. 5; c. 2; d. 3; e. 6; f. 4

24. 2 miles KM (6000 feet = 1 NM) (5280 feet = 1 SM)

25. 24

26. Receiver Autonomous Integrity Monitoring

27. 4

THIS PAGE INTENTIONALLY LEFT BLANK

CHAPTER TWO
IFR SUPPLEMENT, FLIGHT INFORMATION HANDBOOK, ENROUTE LOW ALTITUDE CHARTS, GENERAL PLANNING, AND AREA PLANNING

200. INTRODUCTION

This chapter introduces the student to the DOD FLIP program and the following publications: IFR Supplement Flight Information Handbook (FIH), Enroute Low Altitude Charts, General Planning (GP), and Area Planning (AP) North and South America (AP-1).

In this chapter, a question-answer format is used throughout, instead of an end of chapter review. This is to provide reinforcement in learning to use a wide range of flight information publications.

201. LESSON TOPIC LEARNING OBJECTIVES

TERMINAL OBJECTIVE

1. Demonstrate a working knowledge of definitions, and aeronautical information contained in the FLIP to include GP, AP, Low Altitude (IFR) Charts, IFR Enroute Supplement, and Flight Information Handbook (FIH).

ENABLING OBJECTIVES

1. Read the Table of Contents of the IFR Supplement and be able to determine the location of information provided.

2. Read the IFR Supplement legend and know the meaning of symbols and abbreviations.

3. Read the IFR Supplement legend and learn what aeronautical information is listed for each airport and navigation facility.

4. For airports listed in section B of the IFR Supplement, be able to locate and list specific airport information requested, such as

   a. The airport classification.

   b. The airfield identifier.

   c. Field elevation.

   d. Runway lighting.

   e. Runway weight-bearing capacity.

   f. JASU available.

g. Fuel available.

h. Aircraft services available.

i. Airport operating procedures listed in airport remarks.

j. Communication frequencies for specific airport functions.

k. Airport Radio Aids to Navigation.

5. Read and become familiar with the various procedures listed in the Table of Contents and, Section C of the IFR Supplement, to include:

a. ADIZ Procedures.

b. No-NOTAM Preventive Maintenance Schedules.

6. Read and become familiar with the information and procedures published in the Table of Contents of the Flight Information Handbook (FIH).

a. List information published in the Special Notices Section.

b. List General Information published in the FIH.

c. List Emergency Procedures published in Section A which apply to domestic flights.

d. List National Flight Data and Procedures published in Section B which apply to domestic flights.

e. List Meteorological Information and Procedures published in Section C which apply to domestic flights.

f. Use the conversion tables listed in Section D which apply to domestic flights.

g. Locate and decipher abbreviations listed in Section F of the FIH.

h. Locate and decipher NOTAM Codes listed in Section F of the FIH.

7. List specific information printed on the Enroute Low Altitude Chart.

8. Read the Chart Legend and be able to identify the following on an Enroute Low Altitude Chart:

a. Airport information

b. Radio Aids to Navigation

2-2 IFR SUPPLEMENT, FLIGHT INFORMATION HANDBOOK, ENROUTE LOW ALTITUDE CHARTS, GENERAL PLANNING, AND AREA PLANNING

c. Location of Flight Service Stations

d. Standard Flight Service Station Frequencies

e. Explain the meaning of chart symbols

f. Airspace information

i. Air Route Traffic Control Center (ARTCC) ("Center") boundaries

ii. ARTCC Remote Sites with Discrete Frequencies

iii. Controlled Area

iv. Class D

v. Class B

vi. Class G

vii. Special Use Airspace

g. Know and be able to recall the information contained in the Miscellaneous section of the legend.

GP PUBLICATIONS

9. Be able to use the Index for Aeronautical Information to locate information contained in the FLIP publications (Chapter One).

10. Be able to look-up and understand definitions contained in Chapter Two, Explanation of Terms.

11. Be able to look-up and recall specific information regarding various publications within the DOD FLIP Program as outlined in Chapter Three.

12. Using GP Chapter Four, Flight Plans as a guide, be able to correctly complete a DD Form 175 Military Flight Plan.

13. Be familiar with, and be able to recall specific information contained in Pilot Procedures/Chapter Five, to include but not limited to the sections outlined below.

a. Section A - Preflight

i. Filing of Flight Plan (FAA) (DD Form 1801)

ii. NOTAM Systems

b. Section B - Departure

i. ATC Clearances

ii. Abbreviated IFR Departure Clearance

iii. Clearance Limit

iv. Use of Standard Instrument Departures (SID)

v. Departure Radar

vi. Adherence to Air Traffic Clearance

c. Section C - Enroute

i. Enroute Clearance

ii. IFR Clearance with VFR Restrictions

iii. Combination Clearances

iv. ATC Clearance Readback/Altitude Verification Procedures

v. Air Ground Communications (FAA)

vi. Transponder Procedures

vii. Holding Procedures

d. Section D - Arrival

i. Enroute Descent

ii. SFA-UHF Single Frequency Approach

iii. Procedures in United States Class D Airspace

iv. Approach Clearances

v. Radar ATC Procedures

vi. Closing of Flight Plans

2-4 IFR SUPPLEMENT, FLIGHT INFORMATION HANDBOOK, ENROUTE LOW ALTITUDE CHARTS, GENERAL PLANNING, AND AREA PLANNING

e. Section E – Theater Supplementary Procedures and National Supplementary Procedures (United States)

i. Aircraft Speeds Below 10,000 feet MSL

ii. Aircraft Wake Turbulence

iii. Security Control of Air Traffic

iv. Military Authority Assumes Responsibility for Separation of Aircraft (MARSA)

v. Radar Traffic Information Service

vi. Visual Approach Slope Indicator

vii. VOR Receiver Checkpoints

14. Given an aircraft service and type function of flight, be able to determine the correct written and verbal call signs using Chapter Nine, Codes for Aircraft Identification.

AP/1 PUBLICATION

15. Review and be familiar with AP/1 Chapters One and Three (National Supplementary Procedures and North American Region – United States). Using the AP/1 as a reference, be able to answer questions on flight procedures, U.S. airspace and airports, to include but not limited to the areas outlined below:

a. Flight Planning

i. Quota Flow Control – Air Route Traffic Control Centers (ARTCC)

ii. Airport Reservation Operations and Special Traffic Management Programs

iii. U.S. Controlled Airspace

(a). Class A

(b). Class B

(c). Class C

(d). Class D

(e). Class E

(f). Class G

iv. FAA Airspaces

v. Restricted Area Procedures

vi. Altimeter Settings

b. Supplementary Airport Information

c. Route and Area Restrictions

d. Flight Hazards

e. Preferred Routes - Low Altitude

f. Preferred Routes - High Altitude

g. VOR Receiver Checkpoints

202. IFR SUPPLEMENT

The **IFR Supplement** is part of the enroute phase of the FLIP Program, and it is to be carried in the aircraft on all IFR flights. The **IFR Supplement** contains an alphabetical listing of all airports that have a published DOD instrument approach procedure and/or radar capability, integrated with an alphabetical listing of all NAVAIDs and ARTCC facilities. It also contains brief presentations on miscellaneous aeronautical information such as ADIZ procedures, No-NOTAM Preventive Maintenance Schedules, and Position Reports. The supplement is published every eight weeks and is printed in blue to distinguish it from the **VFR Supplement**. It is the intent of this section to make you familiar with the general information and legend pages found in the supplement. These pages will assist you in becoming acquainted with the contents of the book. The IFR Supplement is broken down into sections as follows:

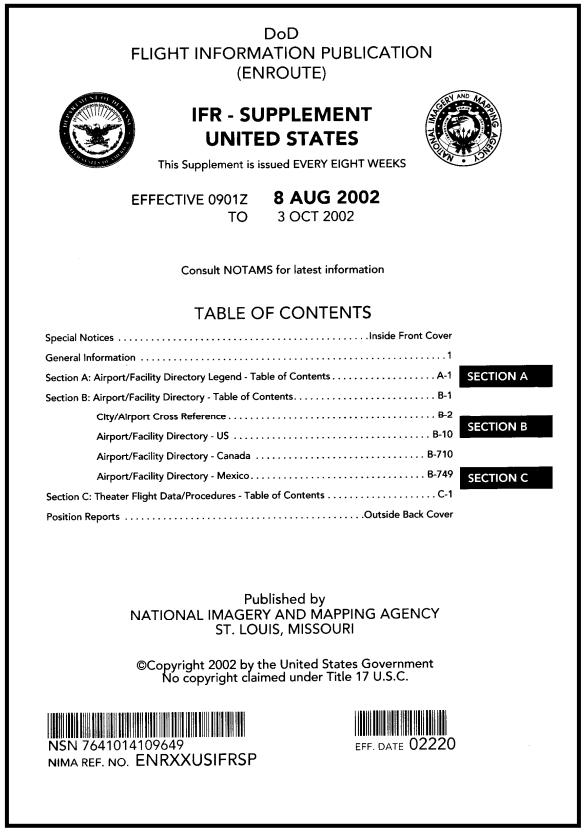

DoD
FLIGHT INFORMATION PUBLICATION
(ENROUTE)

IFR - SUPPLEMENT
UNITED STATES

This Supplement is issued EVERY EIGHT WEEKS

EFFECTIVE 0901Z **8 AUG 2002**
TO 3 OCT 2002

Consult NOTAMS for latest information

TABLE OF CONTENTS

Special Notices ..... Inside Front Cover
General Information 1
Section A: Airport/Facility Directory Legend - Table of Contents ..... A-1 SECTION A
Section B: Airport/Facility Directory - Table of Contents B-1
City/Airport Cross Reference B-2
Airport/Facility Directory - US ..... B-10 SECTION B
Airport/Facility Directory - Canada B-710
Airport/Facility Directory - Mexico ..... B-749 SECTION C
Section C: Theater Flight Data/Procedures - Table of Contents C-1
Position Reports ..... Outside Back Cover

Published by
NATIONAL IMAGERY AND MAPPING AGENCY
ST. LOUIS, MISSOURI

©Copyright 2002 by the United States Government
No copyright claimed under Title 17 U.S.C.

NSN 7641014109649
NIMA REF. NO. ENRXXUSIFRSP
EFF. DATE 02220

Figure 2-1 View the Front Cover of the IFR Supplement United States

The front cover Table of Contents is further subdivided into a Table of Contents for each section:

Section A covers the Airport/Facility Directory Legend. View page A-1 in the IFR Supplement.

Section B is the Airport/Facility Directory. View pages B-1 through B-9.

Section C consists of Theater Flight Data/Procedures. View page C-1.

203. IFR SUPPLEMENT QUESTIONS

Answer the following questions using the edition of the **IFR Supplement** provided. Answers are listed in the back of this text. Section A Questions 1- 32 are taken from the Airport/Facility Directory Legend. They refer to the Lesperance INTL airport, page A2, in the IFR Supplement.

1. Where will you find military NOTAM file? _____

2. The airport is located in _____.

3. The latitude and longitude of the airport are _____.

4. Lesperance INTL's location identifier is _____.

NOTE

> Normally three letters and/or digits are used as identifiers for airports and NAVAIDs. These identifiers are used on flight plans, charts, clearances, etc., for brevity. When a four-letter identifier is shown, it is an ICAO (International Civil Aviation Organization) identifier in which a fourth letter prefixes the normal 3-letter identifier. That first letter then identifies the country or a specific area of the world. Example**:** K for the U.S., M for Mexico, C for Canada, etc.

5. If a pilot plans to take off from Lesperance INTL at 1500 local standard time, what time would he/she enter on the flight plan (Z-time)? _____

6. The airport is geographically portrayed on the L-22 low altitude chart. (True/False)

7. What is the alternate name of Lesperance INTL? _____

8. Lesperance INTL has a military tenant. (True/False)

9. Who is the military tenant at the field? _____

10. What is the airport elevation? _____

11. Lesperance INTL lighting (for RWY 9) consists of _____.

    a. strip lights, and HIRL
    b. strip lights, approach lights, and HIRL
    c. PAPI: HIRL, REIL, and B.P.
    d. strip lights, HIRL, HIAL, sequenced flashing lights

2-8 IFR SUPPLEMENT, FLIGHT INFORMATION HANDBOOK, ENROUTE LOW ALTITUDE CHARTS, GENERAL PLANNING, AND AREA PLANNING

12. The longest usable runway is 8904 feet long and is made of asphalt. (True/False)

13. The weight-bearing capacity for twin wheel type landing gear on RWY 9 at this field is_____.

14. If your aircraft requires an MA-1 power starting unit, will such power be available? _____

15. Can JP-4 aviation fuel be obtained at Lesperance INTL? _____

16. What is the NATO code for JP-4? _____

17. What does the prefix NC signify when used in the fuel section of the airport directory? _____

NOTE

The following is reproduced from OPNAVINST 3710.7:

FUEL PURCHASE

Aircraft fuel and oil is made available to military users through military, government contract, and commercial sources. There is no economical justification for pilots purchasing fuel/oil from commercial sources. The cost of this fuel is considerably higher than that purchased from either military or contract sources. Navy and Marine Corps flight personnel are not authorized to purchase aircraft fuel/oil from other than military or contract sources except under the following circumstances:

a. Flight is classified as official business.

b. Flight is terminated as a result of a bona fide emergency.

c. Flight terminates at alternate airport in lieu of filed destination.

d. Flight is made by aircraft with limited range and purchase of aircraft fuel or oil from other than military or contract (government) sources is necessary to complete the assigned mission.

18. What type of aviation oil is available at the airport? _____

19. Direction of engagement for arresting gear is indicated by an arrow. (True/False)

20. In order to use the Navy facilities at Lesperance INTL you must be on official business (True/False) What does "official business only" indicate? _____

21. Are Customs available at Lesperance INTL? _____

NOTE

A tie-in Flight Service Station is the FSS handling flight clearances for the particular airport for which it is listed. It may or may not be located in the airport. Radio call sign is "RADIO."

22. What is the frequency for the pilot to dispatcher service? _____

NOTE

Pilot to dispatcher (PTD) is a communication facility established to enable pilots to transmit NON-ATC information (i.e., servicing, maintenance, VIP information, etc.) to Base Operations. Radio call sign is "Operations."

23. What is the name of the Approach Control serving this airport? _____ Does it have radar capability? _____

24. Prior to taking off on an IFR flight, a pilot would receive his clearance on 281.4 (CLNC DEL). (True/False)

NOTE

All IFR flights must have clearance prior to takeoff. Normally this clearance is relayed from ATC to the pilot via the tower on a ground control frequency. At a busy airport, a special frequency is set aside for this task and is listed as a clearance delivery frequency.

25. Pilot to Metro (PMSV) service is available on frequency 344.6. (True/False)

NOTE

Pilot to Metro (PMSV) service is a means provided whereby the pilot can communicate directly with the weather forecaster. The radio call sign for this device is METRO; i.e., "Lesperance METRO." Maximum use of this service is encouraged when requesting or reporting enroute weather.

26. What is the significance of an X following a frequency? _____

27. The Clermont VOR/DME has interference-free service of 40 NM below 14,500 feet MSL. (True/False)

28. The Clermont VOR/DME has a Radio Class Code of (HA). (True/False)
What is the meaning of (HA)? _____

2-10 IFR SUPPLEMENT, FLIGHT INFORMATION HANDBOOK, ENROUTE LOW ALTITUDE CHARTS, GENERAL PLANNING, AND AREA PLANNING

29. The MHW code for an NDB means it is a non-directional beacon/without voice. (True/False)

30. What is the channel number of the Clermont DME? _____

31. What is the three-letter location identifier of the VOR? _____

NOTE

Normally the three-letter location identifiers of the NAVAIDs are the same as the field they serve; however, there are exceptions to this rule.

32. What are the bearing and distance to the Clermont NDB from the field? _____

In addition to airports, the airport/facility directory also contains Flight Service Stations, Air Route Traffic Control Centers, and enroute navigation facilities.

Questions 33-34 are taken from the front cover of the IFR Supplement.

33. The IFR Supplement is issued every eight weeks. (True/False)

34. Special notices of a permanent nature will be carried for two issues and then incorporated in the appropriate section of the applicable FLIP product. (True/False)

SECTION B

35. Acore is _____.

    a. a Flight Service Station
    b. a NDB
    c. an Air Route Traffic Control Center

36. A VFR position report over Oshkosh, Wisconsin, would be given to_____.

NOTE

If there is no Flight Service Station named in parentheses, then the controlling service station's name is identical to the name of the NAVAID. If the word "radio" does not appear, then the enroute charts or the **VFR Supplement** must be consulted to determine the controlling Flight Service Station.

37. At Jacksonville INTL, the maximum runway weight-bearing capacity for a single-wheel type landing gear is _____.

Questions 38-43 refer to NAS Jacksonville.

38. NAS Jacksonville is a PPR Field. (True/False)

39. During what hours will noise abatement be in effect? _____

40. Jet engine oil 1010 is available. (True/False)

41. You could expect to contact Approach Control on 379.9 below 18,000 feet MSL. (True/False)

42. You could expect Cecil VOR to have voice capability. (True/False)

43. The course and distance from NAS Jacksonville to the Cecil VOR are _____º and _____ miles.

44. The Jambe NDB is coded (MHW). What does this mean? _____

SECTION C

Questions 45-49

45. Weather conditions for No-NOTAM preventive maintenance for USN facilities with two approach NAVAIDs are_____.

46. Where can No-NOTAM preventive maintenance schedules for USAF facilities be found _____?

47. The allowable tolerance for penetration of a coastal ADIZ are _____ minutes and _____ miles from centerline of proposed route over land.

48. Flights that remain within 10 NM of the point of departure do not have to file IFR or DVFR if they intend to penetrate an ADIZ. (True/False)

49. When a flight penetrates or operates within the ADIZ, a _____ or _____ flight plan will be filed in writing or by telephone with an appropriate aeronautical facility prior to_____.

204. IFR SUPPLEMENT ANSWERS

1. https://www.notams jcs.mil
2. FL-Florida
3. N24 01.90XW81 35.26
4. KLES
5. See UTC +2 on Legend
6. False (H4H) (L12F)
7. Tavish Field
8. True
9. Navy
10. 301 feet MSL
11. c.
12. False 8596
13. 220,000 lbs.
14. Yes
15. No
16. F-40
17. No contract fuel
18. 0 - 128
19. True (See page A-13IFR Supplement)
20. True; OFF BUS ONLY - (See page A.24)
21. Yes, with prior notice
22. 372.2 MHz

2-14 IFR SUPPLEMENT, FLIGHT INFORMATION HANDBOOK, ENROUTE LOW ALTITUDE CHARTS, GENERAL PLANNING, AND AREA PLANNING

23. Lesperance Approach Control; Yes (indicated by the symbol R) (Definition of R located on page A-4)

24. True

25. True

26. Available on request only. (See page A-3)

27. False

28. True - Normal anticipated interference-free service below FL180.

29. True (Normal anticipated interference-free service below FL180: 14,500-40 NM, 14,500-60-100, 18,000-45,000-130)

30. Ch 122

31. CMF

32. 227º 9.5 NM

33. True (front cover)

34. True (inside cover)

35 b.

36 Green Bay FSS

37. 100,000 lbs.

38. True

39. 0300 - 1200Z and 1300 - 1700Z Sunday

40. True

41. True

42. False (See page A-25 Radio Class Code)

43. 268º/11 NM to VOR from field

44. Non-directional Radio Beacon less than 50 watts - 25 NM and without voice. (See IFR Supp, Sec A)

45. Ceiling 3000 and visibility 5 SM.

46. Published under applicable NAVAID, ILS/RADAR, or Terminal FLIP Radar.

47. 5; 10

48. True

49. DVFR; IFR; takeoff

205. FLIGHT INFORMATION HANDBOOK (FIH) GENERAL INFORMATION

General

The Flight Information Handbook is a DOD FLIP issued every 32 weeks. It contains aeronautical information which is required by DOD aircrews in flight, but which is not subject to frequent changes. Sections include Emergency Procedures, National and International Flight Data and Procedures, Meteorological Information, Conversion Tables, and Standard Time Signals. This publication is intended for U.S. military use, and procedures herein may not be applicable to other users. See the front cover of the Flight Information Handbook.

The information and procedures published are for National and International (ICAO) use. You will be required to learn only the information and procedures for National use (domestic flights).

Page 2 is an index of subjects listed in alphabetical order (see page 2 of FIH).

Each section has a separate table of contents. See pages A-1, B-1, C-1, D-1, E-1 and F-1 in the FIH.

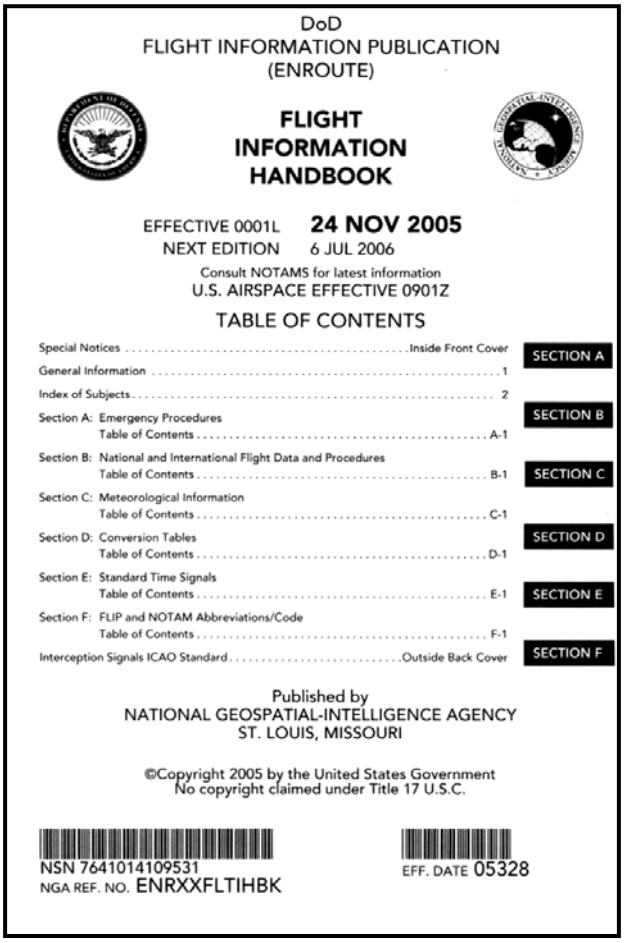

DoD
FLIGHT INFORMATION PUBLICATION
(ENROUTE)

FLIGHT INFORMATION HANDBOOK

EFFECTIVE 0001L **24 NOV 2005**
NEXT EDITION 6 JUL 2006
Consult NOTAMS for latest information
U.S. AIRSPACE EFFECTIVE 0901Z

TABLE OF CONTENTS

Special Notices ..... Inside Front Cover
General Information 1
Index of Subjects 2
Section A: Emergency Procedures
Table of Contents A-1
Section B: National and International Flight Data and Procedures
Table of Contents B-1
Section C: Meteorological Information
Table of Contents C-1
Section D: Conversion Tables
Table of Contents D-1
Section E: Standard Time Signals
Table of Contents E-1
Section F: FLIP and NOTAM Abbreviations/Code
Table of Contents F-1
Interception Signals ICAO Standard ..... Outside Back Cover

SECTION A
SECTION B
SECTION C
SECTION D
SECTION E
SECTION F

Published by
NATIONAL GEOSPATIAL-INTELLIGENCE AGENCY
ST. LOUIS, MISSOURI

©Copyright 2005 by the United States Government
No copyright claimed under Title 17 U.S.C.

NSN 7641014109531
NGA REF. NO. ENRXXFLTIHBK
EFF. DATE 05328

Figure 2-2 Flight Information Handbook – Front Cover

206. FLIGHT INFORMATION HANDBOOK QUESTIONS

Using the Index of Subjects and Table of Contents for each section, answer the following questions:

1. NAS Pensacola has less than continuous Pilot to Metro (PMSV) service and weather radar. (True/False)

2. Minutes out of your destination, Patrick AFB, you may receive an updated forecast report on Patrick PMSV frequency_____.

3. Prior to taking off on any military flight, it is mandatory for the pilot to obtain weather and NOTAM information. If a pilot is departing a nonmilitary airfield in the vicinity of Andrews Air Force Base, how can he obtain weather and NOTAM information?

4. A PIREP (Pilot Weather Report) will be made under which conditions?

   a. In flight when requested.
   b. When unusual and unforecast weather is encountered.
   c. When a missed approach is executed due to weather.
   d. In all the above conditions.

5. IFR position reports are required as indicated by the position reporting symbols shown on the FLIP Enroute charts, and passing each direct route reporting point or fix used in the flight plan. (True/False)

6. Position reports on an IFR flight plan are never given in a radar environment. (True/False)

7. The pilot in command shall report immediately any in-flight malfunction of navigational or air/ground communications capability to_____.

8. What are CIRVIS reports? _____

9. An aircraft equipped with a transponder and on a VFR flight, regardless of altitude, would normally use a transponder Mode 3/A Code of _____.

10. The abbreviation ATIS means _____.

NOTE

ATIS information is prerecorded and is normally broadcast over the same frequency as the VOR serving the terminal area or UHF frequencies.

11. The percent landing roll increase for an RCR of 07 is _____.

2-18 IFR SUPPLEMENT, FLIGHT INFORMATION HANDBOOK, ENROUTE LOW ALTITUDE CHARTS, GENERAL PLANNING, AND AREA PLANNING

12. To indicate two-way radio communication failure to ATC, the transponder should be adjusted to reply on Mode 3/A Code _____.

13. When two-way communications are lost in VMC, if able to maintain flight in VMC, the pilot will land _____ and notify_____.

14. When lost communications occur in IMC, the pilot will:

    a. proceed by the route assigned in the last _____ received,

    b. at an altitude last _____ by ATC, or at _____, whichever is higher, and

    c. begin descent from the enroute altitude upon reaching the fix from which the approach begins, but not before the _____ time (if received), or at the _____ as derived from the flight plan or as amended with ATC.

15. An emergency wave-off signal from a wave-off lighting system at USN/USMC airfields may be signaled to aircraft on final approach by _____ lights flashing near the runway touchdown zone.

16. List the meaning of the following abbreviations.

a. ADIZ	_____	d. DVFR	_____
b. ALSF-1	_____	e. HIRL	_____
c. CIRVIS	_____	f. ICAO	_____

17. The ICAO NOTAM code is published to enable the coding of information regarding the establishment, condition or change of _____, _____, and _____, _____ to _____ in flight, or _____ and _____ facilities. Encoding facilitates the dissemination of NOTAMs by _____ the transmission time over telecommunication channels.

18. All NOTAM code groups contain five letters. The first letter of the group is always _____.

19. Decode the following:

    a. QLBAK _____

    b. QFMAU SAR OPS UFN SR TIL SS _____

20. How does a pilot know if he/she is in a radar environment?

21. Pilots will make position reports in radar environment when requested by ATC. (True/False)

22. The lighting symbol "A-4" denotes what type of approach lighting.

207. FLIGHT INFORMATION HANDBOOK ANSWERS

1. False

2. 344.6

3. COMM 618-256-9755 or DSN 858-2840/5826 (Refer to section C - Table of Contents: page C4)

4. d. (See Pilot Weather Reports (PIREPS) Format - C-60)

5. True (FAA ATC Procedures - Position Reports)

6. False, position will be given in radar environment if ATC requests.

7. ATC or FSS (section B)

8. Security reports (section B)

9. 1200 (section B)

10. **A**utomatic **T**erminal **I**nformation **S**ervice

11. 99% - 46% (section B)

12. 7600 (section A)

13. As soon as practicable; ATC (Two-Way Radio Failure - section A)

14. (a) ATC clearance

    (b) assigned; minimum enroute altitude

    (c) expected further clearance; estimated time of arrival

15. red, high intensity.

16. Look them up in section F. You will need to know them sooner or later.

17. radio aids; airport; lighting facilities; danger; aircraft; search; rescue; reducing.

18. Q

19. a. Airport beacon resumed normal operation.

    b. Meteorological service not available due to search and rescue operation until further notice from sunrise to sunset.

20. ATC says you are in "RADAR CONTACT."

21. True

22. MALS and MALSF.

208. ENROUTE LOW ALTITUDE CHARTS

These charts portray the airway system and related data required for IFR operations at altitudes below 18,000 feet MSL. Twenty-six variable scale charts are printed on thirteen sheets, L-1 through L-26, covering the entire United States. An additional sheet, charts L-27 and L-28 duplicating data shown on L-20, L-22, L-24, and L-25, is available for those who frequently plan flights north and south along the East Coast within the area of coverage. Charts covering the area of flight must be carried in the aircraft for all IFR flights. See bottom of front page on the L-18/L-17 chart for portrayals.

The effective date and the expiration date are shown on the cover of each chart. Major changes to the airway structure and procedures are scheduled by the FAA to become effective on a specific date once every eight weeks. Charts are revised accordingly and show the date this information is effective. Charts, therefore, should not be used prior to the "effective date."--- other information; i.e., frequencies, hours of operation, etc., are not scheduled and changes occur daily. Action is taken to update this data during the revision cycle, but it has to be terminated fifteen days before the projected "effective date" of the issue under revision to permit printing and timely distribution to users. NOTAMs must be consulted for latest information on data changing after the "cutoff date" and during the life of the current charts.

209. AREA CHARTS

These charts portray the airway system and related data required for IFR operations in selected terminal areas at altitudes below 18,000 feet MSL. Twelve variable scale charts are printed on one sheet. Since area charts include terminal NAVAID and airport information which may **not** be contained in the enroute charts, area charts **must** be consulted when conducting terminal flight operations within the areas covered. (View A-1\A-2 IFR Area Chart).

IMPORTANT FACTS AND DEFINITIONS NOT FOUND IN THE LEGEND ON LOW ALTITUDE OR AREA CHARTS

1. **ATIS**: Automatic Terminal Information Service. Pilots are expected to listen to ATIS broadcasts where in operation to obtain essential, but routine, terminal information. ATIS broadcasts are recorded and the pilot should notify controllers that he has received the broadcast by repeating the alphabetical code word appended to the broadcast. Example: "Information Echo received." Controllers will automatically issue pertinent information to pilots who do not acknowledge receipt of the ATIS broadcast or who acknowledge receipt of a broadcast that is not current.

2. **COMPASS LOCATOR BEACON (Locator Outer Marker (LOM)):** A Non-directional Radio Beacon used in conjunction with an instrument landing system. Check the legend for the appropriate symbol.

3. **ILS:** Instrument Landing System: Provides azimuth and glideslope information on the Course Indicator. It is a type of precision approach. (T-34 not equipped to receive glideslope information.) Check the legend for the appropriate symbol.

4. **LOCALIZER (LOC):** A VHF Directional Radio Beacon which provides azimuth (directional guidance) for use in a nonprecision type approach. It is also used in conjunction with an ILS providing azimuth information. (T-34 can utilize localizers through the VOR radio. Check the legend for the appropriate symbol.)

5. **MARKER BEACON:** A 75-MHz beacon used to designate specific fixes in instrument approaches. Fan and bone refer to the shapes of the signal patterns. Normally associated with ILS approaches. Check the legend for the appropriate symbol.

6. **MINIMUM ENROUTE ALTITUDES (MEAs):** The MEA between navigation aids along VOR airways is an altitude which will meet obstruction clearance requirements, and also assure acceptable navigational signal reception.

7. **MINIMUM OBSTRUCTION CLEARANCE ALTITUDE (MOCA):** The specified altitude between radio fixes on VOR airways, which meets obstruction clearance requirements and which assures acceptable navigational signal reception within 22 NM of a VOR or VORTAC.

8. **MINIMUM RECEPTION ALTITUDE (MRA):** The lowest altitude at which an intersection can be determined.

9. **MINIMUM CROSSING ALTITUDES (MCAs):** The lowest altitude at certain fixes at which an aircraft must cross when proceeding in the direction of a higher minimum enroute IFR altitude (MEA).

NOTE

For further information on obstruction clearance requirements in the IFR environment see **Minimum IFR Altitudes/MIA** in GP Chapter 2.

STOP: DO NOT PROCEED FURTHER IN THIS TEXT UNTIL YOU HAVE **READ** AND **STUDIED** THE CHART LEGEND IN ITS ENTIRETY.

210. DIRECTION QUESTIONS:

Answer the following questions in the spaces provided. Use the edition of the L-18 Low Altitude Chart and the A1-A2 Area Chart provided in IFR ground school.

Explain the meaning of the following symbols:

a.

_____

b.

_____

c.

_____

d.

_____

e.

_____

f.

_____

g. 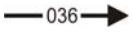

_____

h.

_____

i.

_____

j.

_____

k.

_____

l. X _____

m.

_____

n. _____

o. 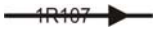

_____

211. ENROUTE LOW ALTITUDE CHART QUESTIONS

1. The Low Altitude Charts are used for altitudes up to, but not including, _____ feet MSL.

2. IFR semicircular cruising rules apply to _____ airspace.

3. Fields printed in brown do not have _____.

4. Fields printed in blue do not have a published instrument approach published for military aircraft. (True/False)

5. List all the frequencies that are normally available at all Flight Service Stations. _____

6. Open area (white) indicates controlled airspace. (True/False)

7. All altitudes are MSL unless otherwise stated. (True/False)

8. All times are local time unless otherwise stated. (True/False)

9. All frequencies in blue are LF/MF type. (True/False)

The remaining questions are taken from the L-18, A-1, and A-2 Charts. For convenience in locating the fixes concerned, the questions are asked of points from west to east.

10. What is the frequency of the Gulfport VOR? _____

11. The Wisle LF/MF Non-directional Radio Beacon has voice capabilities. (True/False)

12. What is the lowest constant altitude you could maintain between Semmes and Monroeville along V-20 on an IFR flight? _____

13. On a flight from Semmes VORTAC via V20 to Monroeville VORTAC, you would change VORs _____ miles from Semmes at the _____.

14. What are the course and distance from Monroeville VORTAC to Jefer Intersection on V20? _____

15. From Monroeville VORTAC to Montgomery VORTAC, the first intersection on V20 is the _____ Intersection, which is identified by the _____ radial of _____ VORTAC and the _____ radial of _____.

16. Referring to the previous question, the symbol (flag) calls attention to the _____, which is _____ feet.

17. What FSS would you call in the vicinity of Junior VOR for weather information? _____

18. If you approached Eufaula VORTAC on V159 and departed east on V70, would Eufaula be a compulsory reporting point? _____

19. Lumpp Intersection is located on V70 east of Eufaula. In a VOR-equipped aircraft, it would be identified by the _____ radial of _____ and the _____ radial of _____.

20. What is the distance from Pecan VORTAC to Greenville VORTAC along V35? _____

21. What is the distance from Marianna VORTAC along V521 to Cross City VORTAC? _____

22. Marianna is in the _____ time zone.

23. What is the field elevation at Tyndall AFB? _____

24. Tyndall's longest landing runway is _____ feet long.

25. What is the radial and distance from Seminole VORTAC to the Chaso Intersection located SW of the Marianna VORTAC? _____

26. Over Seminole VORTAC, IFR position reports are made to _____.

27. The dashed line around Tallahassee Regional marks off the boundaries of the _____.

28. At what point would you switch from 116.5 to 110.2 on a flight from Vienna VORTAC (NE of Pecan VORTAC) to Waycross VORTAC along V243? _____

2-26 IFR SUPPLEMENT, FLIGHT INFORMATION HANDBOOK, ENROUTE LOW ALTITUDE CHARTS, GENERAL PLANNING, AND AREA PLANNING

29. What is the name of the airport located within the Alma VORTAC compass rose? _____ Does it have a published instrument approach? _____
Can the approach be used by military aircraft? _____

30. Which Jacksonville Center remote transmitter site covers the Alma VORTAC area?
_____

31. Which FSS serves the Waycross VORTAC area? _____

32. The lowest **safe** altitude that you could cross Baxly Intersection (located NE of Alma VORTAC) going south on V267 is _____.

33. What is the MOCA between Alma VORTAC and Lotts Intersection? _____
(Lotts Intersection is located on the 035 radial of the Alma VORTAC.)

34. Savannah/Hilton Head International airfield is a _____ airport.

a. civil
b. joint civil military
c. military

35. What special use airspace is Wright AAF in? _____

36. What is the distance from Savannah VORTAC to Craig VORTAC via V37?
_____

37. What does the blue dashed line surrounding Jacksonville International indicate?
_____

38. What does the heavy gray dashed box surrounding Jacksonville International indicate?
_____

USE A-1/A-2 CHART FOR THE FOLLOWING QUESTIONS (Jacksonville)

39. What frequency is the Cecil VOR? _____

40. Does Navy Mayport have lighted runways? _____

41. Navy Mayport lies within a MOA. (True/False) And if so, what MOA? _____

212. ENROUTE LOW ALTITUDE CHART ANSWERS

1. 18,000 feet

2. Uncontrolled (Pilots file in accordance with the appropriate cruising altitudes in order to facilitate a consistent standard; however, ATC will assign altitudes.)

3. Published Instrument Approach Procedure

4. False

5. 255.4 243.0 UHF -- 122.2 121.5 VHF

6. True

7. True

8. False

9. False

10. 109.0

11. False

12. 2000 feet

13. 29; x AXEJA or (x denotes a course change)

14. 045º; 48 NM

15. Picks; 045R; Monroeville (MVC) ; 345R ; Crestview (CEW) VORTAC (Note arrows on chart.)

16. MRA; 3500

17. Anniston Radio; 122.4

18. No

19. 077; Eufaula (EUF); 329; Pecan (PZD)

20. 71 NM

21. 136 NM

22. Central Standard

23. 18 feet

24. 10,000 feet

25. 267º 44 NM

26. Jacksonville Center

27. Class C Airspace

28. 44 NM from VNA (30 NM from AYS)

29. Bacon Co.;Yes; Yes

30. ALMA

31. MACON

32. 2300 feet (MOCA)

33. 1700

34. a.

35. Fort Stewart MOA "C2"

36. 111

37. Class C airspace

38. Area Chart A-1

39. 117.9

40. Yes

41. True - Mayport High and Low

213. GENERAL PLANNING QUESTIONS (GP)

The ability to quickly locate the correct publications, chapter, and section to answer aeronautical/IFR-related questions is the emphasis of this section. The body of information in the DOD FLIP Program is too large for memorization. The student aviator must be selective in studying, and familiar enough with all the publications to find answers to IFR questions.

This homework is designed to "walk you through" the GP and AP publications. The following questions are designed to familiarize you with the general format of the publications and to show you where information critical to IFR flight planning can be found. The questions are listed in the order of the information found in the publications.

1. Chapter One contains an index for _____.

2. Information on IFR CLEARANCES can be found in _____, Chapter _____.

3. Information regarding TWO-WAY RADIO FAILURE is located in the_____.

4. Chapter Two provides an _____.

An understanding of the terminology used in instrument aviation is critical to learning the flight planning process. Although we are not requiring you to write out information about these terms, it is imperative that you take the time to read over the following terms. Your goal is not to memorize them; rather, it is to be familiar with the terms and to know where to go to find out more.

AIRCRAFT APPROACH CATEGORY

AIRCRAFT CLASSES

AIR DEFENSE IDENTIFICATION ZONE/ADIZ

AERONAUTICAL INFORMATION MANUAL/AIM

AIRMET/WA/AIRMAN'S METEOROLOGICAL INFORMATION

AIRPORT ADVISORY AREA

AIRPORT ADVISORY SERVICE/AAS

AIRPORT ELEVATION/FIELD ELEVATION

AIRPORT LIGHTING

AIRPORT SURVEILLANCE RADAR/ASR

AIRPORT TRAFFIC CONTROL SERVICE

AIR ROUTE TRAFFIC CONTROL CENTER/ARTCC

AIR TRAFFIC CLEARANCE/ATC CLEARANCE

2-30 IFR SUPPLEMENT, FLIGHT INFORMATION HANDBOOK, ENROUTE LOW ALTITUDE CHARTS, GENERAL PLANNING, AND AREA PLANNING

AIRWAY/FEDERAL AIRWAY

ALTERNATE AIRPORT

APPROACH CLEARANCE

APPROACH CONTROL SERVICE

APPROACH SPEED

ARC

ATC CLEARS

AUTOMATIC DIRECTION FINDER/ADF

BEARING

BELOW MINIMUMS

CEILING

CHANGEOVER POINTS/COP

CIRCLE TO LAND MANEUVER/CIRCLING MANEUVER

CLEARANCE LIMIT

CLEARED AS FILED

CLEARED FOR (TYPE OF) APPROACH

CLEARED FOR APPROACH

CLEARED FOR THE OPTION

COMPULSORY REPORTING POINTS

CONTACT APPROACH

CONTROLLED AIRSPACE

COURSE

DECISION HEIGHT/DH

DEPARTURE CONTROL

DEVIATION

DISCRETE CODE/DISCRETE BEACON CODE

DISCRETE FREQUENCY

DME FIX

ENROUTE DESCENT

EXECUTE MISSED APPROACH

FEEDER FIX

FEEDER ROUTE

FINAL

FINAL APPROACH COURSE

FINAL APPROACH FIX/FAF

FINAL APPROACH POINT/FAP

FINAL CONTROLLER

FLIGHT LEVEL

FLIGHT PLAN

FLIGHT SERVICE STATION/FSS

FLIGHT VISIBILITY

FUEL REMAINING

GLIDESLOPE/GLIDEPATH

GROUND CONTROLLED APPROACH/GCA

HAND-OFF

HAZARDOUS INFLIGHT WEATHER ADVISORY/HIWAS

HEIGHT ABOVE AIRPORT/HAA

HEIGHT ABOVE LANDING/HAL

HEIGHT ABOVE TOUCHDOWN/HAT

HOLD/HOLDING PROCEDURE

HOLDING FIX

HOMING

IFR TAKEOFF MINIMUMS AND DEPARTURE PROCEDURES

INITIAL APPROACH FIX/IAF

INSTRUMENT APPROACH PROCEDURE/IAP/INSTRUMENT APPROACH

INSTRUMENT FLIGHT RULES/IFR

INSTRUMENT METEOROLOGICAL CONDITIONS - IMC

INTERSECTION

LANDING MINIMUMS/IFR LANDING MINIMUMS

LOCALIZER

LOST COMMUNICATIONS/TWO-WAY RADIO COMMUNICATIONS FAILURE

LOW ALTITUDE AIRWAY STRUCTURE/FEDERAL AIRWAYS

2-32 IFR SUPPLEMENT, FLIGHT INFORMATION HANDBOOK, ENROUTE LOW ALTITUDE CHARTS, GENERAL PLANNING, AND AREA PLANNING

LOW APPROACH

MINIMUM CROSSING ALTITUDE/MCA

MINIMUM DESCENT ALTITUDE/MDA

MINIMUM ENROUTE IFR ALTITUDES/MEA

MINIMUM OBSTRUCTION CLEARANCE ALTITUDE/MOCA

MINIMUM RECEPTION ALTITUDE

MINIMUM SAFE ALTITUDE/MSA

MINIMUMS/MINIMA

MISSED APPROACH

MISSED APPROACH PROCEDURE

NAVIGATIONAL AID CLASSES

NAVIGATIONAL AID/NAVAID

NO GYRO APPROACH/VECTOR

NONPRECISION APPROACH PROCEDURE/NONPRECISION APPROACH

NOTICE TO AIRMEN/NOTAM

OPTION APPROACH

PILOT IN COMMAND

PILOT'S DISCRETION

PILOT WEATHER REPORT/PIREP

POSITION REPORT/PROGRESS REPORT

PRACTICE INSTRUMENT APPROACH

PRECISION APPROACH RADAR/PAR

PREFERRED IFR ROUTES

PROCEDURE TURN/PT

PROCEDURE TURN INBOUND

RADAR APPROACH

RADAR CONTACT

RADAR CONTACT LOST

RADAR SERVICE TERMINATED

RUNWAY VISUAL RANGE

SIGMET/WS SIGNIFICANT METEOROLOGICAL INFORMATION

SINGLE-PILOTED AIRCRAFT

SPECIAL USE AIRSPACE

STANDARD INSTRUMENT DEPARTURE

STANDARD TERMINAL ARRIVAL/STAR

STRAIGHT-IN APPROACH

STRAIGHT-IN LANDING

SURVEILLANCE APPROACH

THRESHOLD CROSSING HEIGHT/TCH

TOUCHDOWN ZONE

TOUCHDOWN ZONE ELEVATION/TDZE

TRANSCRIBED WEATHER BROADCAST/TWEB

TRANSFER OF CONTROL

UNCONTROLLED AIRSPACE

VECTOR

VISIBILITY

VISUAL DESCENT POINT/VDP

VOT/VOR TEST SIGNAL

5. Chapter Three provides an overview of the entire _____ program.

6. The FLIP _____ has been designed primarily for desk use and not for carrying in the aircraft

7. The publication cycle for the Flight Information Handbook is every _____.

8. The _____ _____ _____ is the official publication disseminating DOD worldwide foreign clearance requirements and information on personnel travel.

9. Chapter Four tells us everything we need to know about filling out a _____ _____.

10. Chapter Five outlines standard _____ _____ while operating under both FAA and ICAO control.

11. Pilots should file IFR Flight Plans at least _____ minutes prior to their estimated time of departure.

12. Initial clearances will include whenever practicable, the _____ _____ as the Clearance Limit.

13. There is no requirement for pilots to read back ATC clearances received while on the ground (Except runway assignment and hold short). (True/False)

14. The maximum airspeed for an aircraft at 5000 feet in the holding pattern is _____.

15. When using a VOR Receiver check point, IFR flight should not be attempted if the error exceeds ±____º in the air.

WE WILL NOT DEAL WITH CHAPTERS 6-10 DURING THIS COURSE.

214. GENERAL PLANNING ANSWERS

1. Aeronautical Information
2. GP, 5
3. Flight Information Handbook
4. Explanation of Terms
5. FLIP
6. Planning
7. 32 weeks
8. Foreign Clearance Guide
9. Flight Plan
10. pilot procedures
11. 30
12. destination airport
13. True (except runway assignment and hold short)
14. 200 KIAS
15. 6º

215. AREA PLANNING (AP/1) QUESTIONS

Notice that the front cover states that this publication covers North and South America. Now turn to the Table of Contents and examine Chapter Three. The following questions can be found in Chapter Three of AP/1 and are not listed in the order of the information found in the publications.

1. Flight Planning

   a. Quota Flow Control.

      ARTCCs will hold _____ number of aircraft that their primary and secondary holding fixes will safely accommodate without imposing undue limitations on control of other traffic operating within the ARTCC's airspace.

   b. High Density Traffic Areas (HDTAs).

      Certain airports have so much traffic that they occasionally reach the 100% saturation point. That is, Approach Control, Departure Control, and the Tower cannot handle any additional air traffic. These airports and surrounding areas have been designated HDTAs. A system of controls has been established that regulates the flow of traffic into these areas. The four designated HDTA airports are as follows: _____, _____, _____ and_____.

   c. Class B Airspace.

      A(n) _____ _____ is required for all aircraft to operate in the area (Class B airspace).

   d. Class C Airspace.

   The airspace area between the 5NM and 10NM rings begins at a height of _____.

2. Flight Hazards – Florida.

Transiting pilots are strongly advised to contact Pensacola _____ or _____tower prior to entering A-292.

3. Route and Area Restrictions.

How many Department of Energy (DOE) facilities are listed? _____

4. Preferred Routes - Low Altitude.

The preferred routes are designed to serve the needs of airspace users and to provide for a systematic flow of air traffic in the major terminal and enroute flight environments. From Atlanta to Cincinnati, the preferred route is _____ between the hours of _____ to _____ Z and altitudes from _____ to _____ inclusive.

5. Which Low Altitude Charts would be required to fly the above route? _____

6. VOR Airborne Receiver Checkpoints.

The closest VOR Receiver Checkpoint from NAS Whiting Field is located at Crestview, FL. At 1200 feet over the rotating beacon, at Bob Sikes Airport, you will be on the _____ radial, distance _____ from the Crestview VOR.

7. Should Hurlbert be used as an alternate by TW5 aircraft? _____

THIS PAGE INTENTIONALLY LEFT BLANK

216. AP/1 ANSWERS

1. a. the optimum

   b. John F. Kennedy, La Guardia, Ronald Reagan, Washington National, Newark Intl.

   c. ATC clearance (Authorization)

   d. 1200 feet AGL

2. Approach Control; Navy Whiting

3. 8

4. V97 VXV V115 AZQ V339 FLM, 1200 to 0300, 8000 feet, 17,000 feet

5. L20, L22

6. 106; 8.6NM

7. No

CHAPTER THREE
INSTRUMENT APPROACH PROCEDURES

300. INTRODUCTION

This chapter introduces the student to the DOD Flight Information Publication (Terminal) Low Altitude United States, commonly referred to as "approach plates," and instrument approaches.

301. LESSON TOPIC LEARNING OBJECTIVES

TERMINAL OBJECTIVE

1. Demonstrate a working knowledge of definitions and aeronautical information contained in the Low Altitude Instrument Approach Procedures. In this chapter, a question-answer format is used throughout, instead of an end of chapter review. This is to provide reinforcement in learning to use a wide range of flight information publications.

ENABLING OBJECTIVES

1. State weather minimums for VFR flight in controlled airspace.

2. Name two types of precision approaches.

3. Name two types of radar approaches.

4. List the differences between the two types of radar approaches.

5. List the aircraft equipment required to execute a radar approach.

6. Identify the publication which lists radar approach data.

7. State the definition of a Standard Instrument Approach.

8. Identify the publication which lists nonradar approaches.

9. Name the types of nonradar, nonprecision approaches.

10. State the publication cycle of the Low Altitude Instrument Approach Procedures.

11. State the three types of procedures recognized at a procedure turn.

12. Review the different types of approach plates printed in the text and answer related questions as to:

a. The type approach to be executed.

b. The radio and frequency required.

c. The altitude minima when approaching the IAF.

d. The holding pattern to be executed if holding is required.

e. The landing minima for the approach.

f. The approach plan view to be flown.

g. The altitude profile to be flown.

h. How the MAP is defined.

i. The missed approach procedures to be executed if the approach is missed.

j. The highest obstructions on the approach plate and at the airport.

k. Other data printed on the airport sketch.

13. Select the type precision approach that can be executed by T–34C pilots.

14. Transcribe the meaning of radar approach abbreviations and symbols by referring to the legend and information given in the text.

15. Given the type of radar approach, respond to specific questions about the approach by referring to the legend and information given in the text.

16. Identify the meaning of abbreviations and symbols printed on the approach plates by referring to the legend and information given in the text.

17. Given an approach plate, identify printed information.

a. Identify aeronautical information and approach procedures printed on the plan view.

b. Determine altitudes to be flown as shown on the profile view.

c. Determine landing minima listed in the minima section.

d. List aeronautical information printed on the airport sketch.

e. Identify the type of approach by referring to the identification margin.

18. Recognize the mandatory maneuvers shown on the approach plate.

3-2 INSTRUMENT APPROACH PROCEDURES

19. Describe the missed approach procedure shown on the approach plate.

20. Select the correct rate of descent to remain on glideslope of a precision approach from the rate of descent table published in the Low Altitude Instrument Approach Procedures booklets.

302. INSTRUMENT APPROACH PROCEDURES

An instrument approach procedure is defined as a series of predetermined maneuvers for the orderly transfer of an aircraft under instrument flight conditions from the beginning of the initial approach to a landing or to a point from which a landing may be made visually. A pilot must execute an instrument approach at his destination whenever the weather will not permit a descent from the airway and an approach for landing under VFR weather conditions, which are 1000 feet and 3 miles visibility. If the weather will permit a VFR approach, a pilot on an IFR flight plan has the option of executing a standard instrument approach or canceling his IFR clearance, proceeding VFR to the destination and executing a VFR approach and landing.

303. PRECISION APPROACHES

Instrument approaches can be divided into two main types: precision and nonprecision. A precision approach provides a pilot with both course and glideslope information, while a nonprecision approach provides course information only. This glideslope and course information may be provided by on-board instrumentation (Instrument Landing System, or ILS) or by ground control personnel via two-way radio communications (Precision Approach Radar, or PAR). PAR and ILS approaches are the two most commonly used precision approaches in military aviation. The PAR approach is one of the two types of Ground Controlled Approaches (GCA). The other type of GCA, the Airport Surveillance Radar (ASR) approach, will be explained in the nonprecision approach section.

To execute an ILS approach, an aircraft must be properly equipped. The T–34C is not ILS equipped and cannot execute an ILS approach.

304. PAR APPROACH

PAR equipment operated by FAA or military personnel detects and displays azimuth (course), elevation, and range information of aircraft on final approach course to a runway.

A PAR approach is one in which a controller provides highly accurate navigational guidance in azimuth and elevation to a pilot. Pilots are given headings to fly to direct them to and keep their aircraft aligned with the extended centerline of the runway. They are told to anticipate glidepath interception approximately 10 to 30 seconds before it occurs and when to start descent.

If the aircraft is observed to deviate above or below the glidepath, the pilot is given the relative amount of deviation by use of terms "slightly" or "well" and is expected to adjust his rate of descent to return to the glidepath. Trend information is also issued with respect to the elevation of the aircraft and may be modified by the terms "rapidly" and "slowly"; i.e.," well above glidepath, coming down rapidly." Range from touchdown is given at least once each mile.

To execute a PAR approach, an aircraft does not require any special navigation equipment. The aircraft must have an operating two-way radio with constant communication with the ground controller. Course and glidepath information is received verbally from a ground controller who is using radar to track the aircraft, and to direct it to maintain the desired course and glidepath. A

pilot can execute a PAR approach without a directional gyro (RMI). Since an aircraft is being tracked by radar during a PAR approach, the ground controller can tell the pilot when to start and stop the turns. This type of approach is called a No-Gyro Approach. During the No -Gyro Approach, the controller may state, "Disregard your gyro." When this is said, the controller refers to your directional gyro and NOT your attitude gyro.

The GCA controller will give the following calls to the aircraft executing a PAR approach:

1. Communications check:

   "Navy 6E123, this is your GCA final controller, how do you hear?"

2. Approaching the glidepath:

   "6E123, approaching glidepath, do not acknowledge further transmissions."

3. Intercepting glidepath:

   "Coming up, ON GLIDEPATH"

4. Course and glidepath information at least every 5 seconds:

   "ON GLIDEPATH, ON COURSE"
   "ON GLIDEPATH, TURN LEFT HEADING ZERO EIGHT SEVEN"
   "ON COURSE, GOING SLIGHTLY ABOVE GLIDEPATH"

5. Decision height:

   "6E123, at decision height, if field not in sight, execute missed approach."

Information regarding radar approaches at specific airports is located in the front of the FLIP Low Altitude Approach Procedures (commonly referred to as "approach plates"). Airports serviced by radar approaches are listed in alphabetical order in the black-tabbed (Radar Instrument Approach Minimums) pages.

305. PRECISION AND PAR QUESTIONS

1. The main difference between a precision and a nonprecision approach is that a precision approach provides _____ information in addition to final approach course information.

2. What are the two most commonly used precision approaches? _____

3. To execute a PAR approach, the aircraft's _____ radio must be operational.

4. During a No-Gyro Approach, a pilot would not use the _____ gyro.

5. The T–34C is not equipped to execute what type of precision approach? _____

THIS PAGE INTENTIONALLY LEFT BLANK

306. ANSWERS TO QUESTIONS ON PRECISION AND PAR APPROACHES

1. glideslope
2. PAR/ILS
3. communications
4. directional gyro (RMI)
5. ILS

307. NONPRECISION APPROACHES

A nonprecision approach provides directional (azimuth) guidance only; altitude restrictions are listed in the approach procedure (FLIP Low Altitude Approach Plates). The pilot flies the aircraft along the depicted or directed course, keeping the aircraft within the published altitude restrictions as it descends toward the airport. Nonprecision approaches may be based upon VOR, VOR/DME, TACAN, NDB, GPS, or Localizer radio aids, or upon communications from a controller.

308. ASR APPROACH

The ASR approach is a nonprecision radar ground controlled approach. During an ASR approach, the radar controller will provide the pilot with azimuth information in the form of headings to fly. All altitude information will be advisory. The controller will state, if the pilot requests, the recommended altitude at each mile of the approach.

The ASR ground controlled approach also requires two-way radio communications and cannot be used for selection of an alternate airport for single-piloted aircraft

An example of the controller's instruction would be:

"ON COURSE, TWO MILES FROM RUNWAY, ALTITUDE SHOULD BE ONE THOUSAND EIGHT HUNDRED FEET."

309. LOCALIZER APPROACH

A localizer (LOC) approach is a nonprecision approach using the ILS localizer for course guidance (no glidepath information is provided). To execute a LOC approach, an aircraft must be equipped with a VHF navigation receiver able to receive the LOC frequency range of 108.1 to 111.9 MHz. LOC frequencies will always end in odd tenths. When executing a LOC approach the CDI is used to display course information.

With a localizer frequency tuned the CDI becomes four times more sensitive, displaying .5º per mark instead of 2º. Additionally, the OBS knob has no effect on CDI movement and the TO/FROM flag disappears from view. The VOR needle will freeze at the 3 o'clock position.

Additional navigation equipment (LF/MF ADF, marker beacon, or DME) is required for the pilot to know the distance from the runway. A Localizer approach may be executed when the Initial Approach Fix, Final Approach Fix, and Missed Approach Point can be identified. Approach Control can use radar to assist in determining these fixes during practice approaches.

NDB (Non-directional Beacon) approaches are published for both LF/MF and UHF Non-directional Radio Beacons. The T–34C is not equipped to receive either type of signal, and therefore cannot execute either approach.

310. APPROACH MINIMA

Approach minimums can be found in the Low Altitude Instrument Approach Procedures. There are several terms that must be understood when discussing approach minima. The first is Decision Height (DH) or Decision Altitude (DA).

Decision Height/Decision Altitude is that altitude at which a decision must be made, during an ILS or PAR instrument approach, to either continue the approach or to execute a missed approach. A missed approach must be initiated if visual reference to continue the approach has not been established.

The required visual reference means that section of the visual aids (lights) or of the approach area which should have been in view for sufficient time for the pilot to make an assessment of the aircraft position and rate of change of position, in relation to the desired flight path.

The DH/DA is specified in MSL and only applies to precision approaches (e.g., PAR and ILS). Turn to the Radar Instrument Approach Minimums section of your Flight Information Publication (Terminal). Radar approach minimums will be found in the black-bordered pages. Notice the DH\MDA–VIS section.

Minimum Descent Altitude (MDA) is the lowest altitude, expressed in feet above MSL, to which descent is authorized on final approach or during circle-to-land maneuvering in execution of a standard instrument approach procedure where no electronic glideslope is provided.

1. MDA applies to _____approaches.

2. DH/DA applies to _____ approaches.

(Answers on next page)

311. APPROACHES – TYPES OF LANDINGS

A pilot executing precision or nonprecision approaches will make either a straight-in landing or a circling maneuver to land on the duty runway. For example, if a pilot received a clearance for a VOR RWY 19 approach at NAS Pensacola, he would use a straight-in landing procedure if the duty runway at NAS Pensacola was 19. However, if the duty runway was 7R, the pilot would make the approach to RWY 19 and upon sighting the duty runway, circle (or, in other words, maneuver) to land on RWY 7R.

Straight-in Minimums are shown on the approach plate when the final approach course is within 30º of the runway alignment and a normal descent can be made from the IFR altitude shown on the approach plate to the runway surface. When either the normal rate of descent or the runway alignment factor of 30º is exceeded, a circling procedure must be used.

Circling Minimums provide obstacle clearance when pilots remain within the appropriate area of protection. Pilots should remain at or above the circling altitude until the aircraft is in a

position from which a descent to landing on the intended runway can be made at a normal rate of descent using normal maneuvers. **Circling minimums are only used in conjunction with nonprecision approaches**.

Height Above Touchdown (HAT) applies to precision and nonprecision **straight-in** approaches. HAT indicates the height of the DH/DA or MDA above the highest runway elevation in the touchdown zone. It is an altitude expressed in AGL. The touchdown zone is the first 3000 feet of the duty runway.

Answers:

1. Nonprecision

2. Precision

Height Above Airport (HAA) is also an AGL altitude, but it only applies to **Circling** maneuver minima. HAA indicates the height of the MDA above the published airport elevation and affords a minimum of 300 feet of obstruction clearance.

312. APPROACH MINIMA–WEATHER MINIMUMS

Ceiling

Before the pilot of a single-piloted aircraft can accept an approach clearance (with the intention to land), the weather at the airfield must be equal to or above the weather minimums published for that approach. The ceiling is expressed in feet above the published airport elevation (AGL), and is equal to or greater than the height of the associated DH/DA or MDA. Ceiling values are shown in parentheses.

Visibility

Visibility minimums for an approach are listed in one of three ways. The visibility value follows the DH/DA or MDA (i.e., 700/40 or 700–1) and is expressed as Runway Visual Range (RVR) or Prevailing Visibility (PV).

For straight-in approaches the visibility values will be either RVR, or PV. For circling approaches, the value will always be PV. It should be noted that the visibility is separated from the DH/DA by a slant line (/) when it is RVR, and separated by a hyphen (–) when it is a PV value.

RVR values are written in hundreds of feet. (An RVR value of 40 = 4000 feet.) PV values are written in fractions of statute miles (i.e., 1/2, 3/4, 1–1/2, 2).

The ceiling and visibility values shown in parenthesis are to be used in flight planning. Review again the Radar Instrument Approach Minimums Section.

313. APPLICABLE RULES FROM OPNAV 3710.7

OPNAV 3710.7 series has established rules governing Navy/Marine Corps pilots on instrument approaches. (review Chapter Five of OPNAV 3710.7). A T–34C with an instructor and a student is considered to be a single-piloted aircraft. According to OPNAV 3710.7 series, a single-piloted aircraft cannot commence an instrument approach (for landing) if the actual weather is below the weather minimums published for that approach. However, once the approach has been commenced, a pilot may continue the approach to the DH/MDA even if the reported weather goes below published minimums.

Another restriction placed on single-piloted aircraft concerns minimums. The absolute minimums for a single-piloted aircraft executing an instrument approach are 200 foot ceiling and height above touchdown (HAT) and visibility 1/2 statute mile or 2400 feet RVR.

For example, when executing a PAR approach which has a decision height of 126 feet MSL and a HAT of 100 feet, 100 feet must be added to your decision height so you do not descend below 200 feet AGL. The weather required would also be increased to at least 200 foot ceiling. Visibility must also be ½ statute mile or 2400 feet of RVR, depending upon which unit of measure is used for the approach.

What is the Decision Height and Weather required for a **single-piloted** aircraft executing a PAR approach at Pensacola NAS for:

	Decision Height	Ceiling-Visibility
RWY 7R	_____	_____
RWY 25R	_____	_____
RWY 19	_____	_____

(Answers on next page)

314. PRACTICE APPROACHES

Although the pilot of a single-piloted aircraft cannot commence an approach if the reported weather is below minimums, he may accept a clearance for a practice approach at an airport that is not the filed destination or alternate, if a landing is not intended. The weather at the filed destination and alternate must meet the IFR filing criteria for filing an IFR flight plan as set forth in OPNAV 3710.7.

Can the pilot of a single-piloted aircraft request a clearance for a practice approach at the intended destination if the weather at the field is reported to be below minimums for the approach intended? .....NO

Can the pilot make a practice approach at the destination if the weather is reported to be above the minimums for the approach? .....YES

315. MISSED APPROACH

Obstacle clearance for missed approach procedures is based on the assumption that the missed approach is initiated at the missed approach point and at an altitude not lower than the MDA or DH/DA. No consideration is made for an early turn. Therefore, when an early missed approach is executed, pilots should, unless otherwise cleared by ATC, fly the instrument approach procedure as specified on the approach plate to the missed approach point at or above the MDA or DH/DA before executing a turning maneuver.

When an approach has been missed, a pilot should request clearance for a specific action. For example, a pilot may request clearance for another approach or request clearance to the alternate airport.

Answers:

1. 225 200–½

2. 221 200–½

3. 222 200–½

316. APPROACH PLATES

Definition

An Instrument Approach Procedure is a series of predetermined maneuvers for the orderly transfer of an aircraft under instrument flight conditions from the beginning of the initial approach to a landing, or to a point from which a landing may be made visually, or the missed approach procedure is initiated.

The procedures for most approaches (with the exception of radar approaches) will be found in the white pages of the Approach Plates. Approach Plates (labeled "DOD Flight Information Publication (Terminal))" are published every eight weeks. At the four-week midpoint, a Terminal Change Notice (TCN) is published which contains revisions, additions, and deletions to the last complete issue of the Approach Plates. A pilot should never use an Approach Plate that is out of date; after the four-week point in the cycle, the current TCN must be checked. View the front and back of your Approach Plate booklet.

Inside the front cover of every volume of the Approach Plates are legends, which shall be studied thoroughly. An explanation of terms such as DH/DA, MDA, HAT, and HAA should be fully understood. Each volume also contains an index of instrument approaches listed alphabetically by airport.

Other essential information found in every volume of the Low Altitude Approach Plates includes the rate of descent table (inside back cover), special IFR takeoff minimums, and **departure** procedures for selected airfields. These special departure procedures are established to assist

pilots in obstruction avoidance. However, takeoff weather minimums for Navy/Marine Corps pilots are outlined in OPNAV 3710.7 series. Look in the Vol. 15 under the IFR Takeoff Mins for departure procedures; the section is commonly referred to as the triangle T portion of the approach plates.

An approach plate can be divided into five sections: plan view, profile view, landing minimum and notes, airport diagram, and approach identification. (Figure 3–1). Individual approach plates will either be in the old format or the new "VOLPE" format which is shown in Figure 3-1. The new format contains the same information but has been redesigned to make it easier to read and reduce "head-down" time by pilots referring to the chart during an approach. As approaches are updated, they are being changed to the new format.

Approach Ident

Notes/ Briefing

Plan View

Profile View

Landing Mins

Airport Sketch

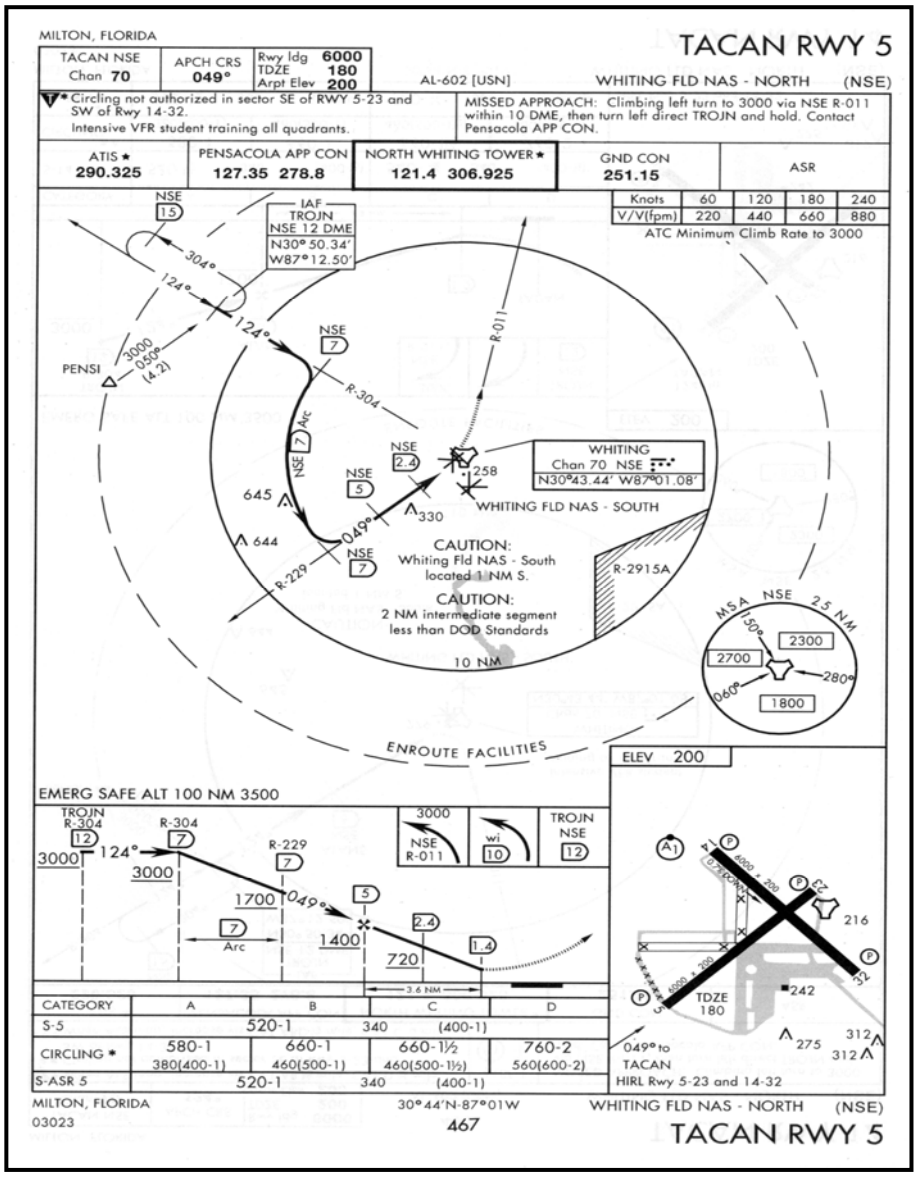

Figure 3-1 NSE Whiting Field TACAN 5

317. PLAN VIEW

The availability of radar is indicated below the communications information section by the appropriate letters "ASR," "PAR," "ASR/PAR."

These terms are applied as follows:

ASR: Airport Surveillance Radar approach procedures are available at the airport, and radar vectoring is also available.

PAR: Precision Approach Radar approach procedures are available.

RADAR VECTORING: Radar Vectoring is available but radar approaches are not available.

VHF and UHF communication frequencies used by approach control, tower, and ground control facilities will be listed. Also note the frequencies for ATIS (Automatic Terminal Information Service) will be listed if available. The star in front of the ATIS frequency denotes less than continuous operation.

The plan view presents a bird's eye view of the entire procedure. Information pertaining to the initial approach fixes, procedure turn, minimum safe altitudes, final approach course, and navigation and communication frequencies are listed on the plan view.

Data shown within the circle is always shown to scale. There is no requirement to stay within this unless stated on the plate. The dashed circles are used when all the information necessary to the approach will not fit to scale within the limits of the plan view.

The Feeder Facilities are shown, in their relative position, navigational aids, fixes, and intersections used by air traffic controllers to direct aircraft to fixes between Victor airways and the Initial Approach Fix (IAF). Minimum altitude and distance between fixes to the IAF are shown with the magnetic course.

The Enroute Facilities ring shows, in their relative position, navigational aids, fixes and intersections that are part of the Enroute Low Altitude Airway structure which are used in the approach procedure.

Minimum Safe Altitudes (MSA) are published for emergency use on approach procedure charts utilizing VOR, TACAN, ILS, NDB or GPS type facilities. The altitude shown provides 1000 feet of clearance above the highest obstacle in the defined sector to a distance of 25 NM from the facility. As many as four sectors may be depicted with different altitudes for each sector displayed in rectangular boxes in the plan view of the chart. A single altitude for the entire area may be shown in the lower right portion of the plan view. Navigational course guidance is not assured at the MSA within the sectors. View ILS RWY 20 at Patrick AFB and notice the different altitudes associated with the various MSA sectors. On RNAV (GPS) approaches the MSA minimum altitudes may be displayed as sectors of the Terminal Arrival Area (TAA). See the RNAV (GPS) RWY 35 at Pensacola Regional for an example of TAA minimum altitudes.

Types Of Nonprecision Approaches

A procedure turn is a maneuver used whenever it is necessary to reverse direction to establish the aircraft inbound on the final approach course. Three types of procedure turns to be discussed here are the 45º procedure turn, the teardrop turn, and the holding pattern in lieu of procedure turn.

View the VOR RWY 8 approach at Pensacola Regional for a 45º procedure turn example. The procedure turn is a required maneuver (bold lines on the approach plate) except,

1. When the symbol **NoPT** is shown,

2. When radar vectoring to the final approach course is provided

3. When an aircraft is established in a holding pattern at the IAF, or

4. When the procedure turn is not depicted on the approach plate.

Under any one of the above conditions a pilot may NOT execute a procedure turn unless he asks for and receives clearance from ATC to do so. A barb symbol indicates the direction or side of the outbound course on which the procedure turn is made. However, the point at which the turn may be commenced and the type and rate of turn is left to the discretion of the pilot.

View the NDB 2 RWY 6 at Cairns AAF for a teardrop procedure turn example.

The teardrop procedure turn consists of departure from an initial approach fix on an outbound course followed by a turn toward and intercepting the inbound course. Its purpose is to permit an aircraft to reverse direction and lose considerable altitude within reasonably limited airspace.

View the VOR-A at Crestview for an example of a holding pattern in lieu of procedure turn.

A holding pattern in lieu of procedure turn may be specified for course reversal on some instrument approach plates. In such cases, the holding pattern is established over an immediate fix or FAF. The holding pattern distance or time specified in the profile view must be observed.

All procedure turn approaches must be completed within the “remain within the distance” depicted in the profile view. This distance is called the procedure turn maneuvering area and is usually 10 NM. However, the maneuvering area may be as large as 20 NM or as small as 5 NM.

If no course reversal is necessary, a procedural track will still be specified using a heavy black line. This is the intended aircraft ground track from the IAF to the FAF and may include only the inbound course (straight-in) or a combination of arcs and courses (arcing approaches). Some procedure tracks may even include dead reckoning courses.

View the TAC RWY 19 at Pensacola NAS for an example of a straight-in approach. View the TAC RWY 23 at North Whiting for an example of an arcing approach.

A single approach plate may incorporate multiple types of approaches (i.e., two arcing approaches and a 45º procedure turn) at separate IAFs. It is important to clarify which procedure is cleared by ATC.

Review the VOR or GPS RWY 31 at Cross City for an example of GPS overlay.
GPS approaches may be "built" on top of an existing approach procedure. This type of approach is known as GPS "overlay" and was designed as a way of quickly integrating GPS into the existing IFR structure.

View the RNAV (GPS) RWY 26 at Pensacola Regional for an example of a GPS approach.

GPS only approaches are built on the "Basic T" design or a modification of that format. The "T" design incorporates from one to three IAFs; an intermediate fix (IF) that serves as a dual purpose IF (IAF); a FAF and a missed approach point (MAP). A standard racetrack holding pattern may be provided at the center IAF, and if present may be necessary for course reversal and for altitude adjustment for entry into the procedure.

A stepdown fix may be provided on the final approach course (i.e., between the final approach fix and the airport) for the purpose of authorizing a lower minimum descent altitude after passing an obstruction. The stepdown fix may be identified by a NDB bearing, radar fix, VOR radial or DME. View TACAN RWY 25L at Pensacola NAS. Notice the radial information in the plan view and compare it with the altitude information given in the profile section.

The missed approach track is indicated by the line of dashes. Note that the missed approach track starts after the missed approach point. In other words, when executing a missed approach, do not make a turning maneuver until you pass the Missed Approach Point. Additionally, notice that the missed approach track is portrayed on the plan view as well as the profile section.

318. PROFILE VIEW SECTION

Viewing the same approach at Patrick AFB, notice the various altitudes in the profile section.

The procedure turn altitude is the altitude the aircraft may not descend below until established inbound on the final approach course.

A Maltese cross symbol denotes the Final Approach Fix (FAF) for nonprecision approaches.

The altitude at the FAF indicates the minimum altitude an aircraft may descend to until passing the FAF.

The altitude at the stepdown fix denotes the altitude an aircraft may not descend below until passing the stepdown fix. If the stepdown fix cannot be identified for any reason, the altitude at the stepdown fix becomes the MDA for straight-in landing minimums.

The Missed Approach Point is the point at which a missed approach procedure shall be executed if the required visual reference does not exist.

Missed approach procedures are written out in the profile view, as well as graphically portrayed in the plan view and profile sections.

Visual Decent Points (VDPs) are incorporated in selected nonprecision approach procedures. The VDP is a defined point on the final approach course of a nonprecision approach to a straight-in landing from which normal descent from the MDA to the runway touchdown point may be commenced, provided visual reference is established. The VDP will normally be identified on the profile view by the symbol: **V**

VDPs are intended to provide additional guidance where they are implemented. No special technique is required to fly a procedure with a VDP. The pilot should not descend below the MDA prior to reaching the VDP and acquiring the necessary visual reference.

Pilots not equipped to receive the VDP should fly the approach procedure as though no VDP had been provided.

319. MINIMUMS SECTION

In the minimums section, the same minimums apply to both day and night operations unless different minimums are specified at the bottom of the minimum box in the space provided for notes.

The minimums for straight-in and circling appear directly under each aircraft category. When there is no division line between minimums for each category on the straight-in or circling lines, the minimums apply to two or more categories. Turn to NDB RWY 15 at Orlando Kissimmee Gateway as an example.

Basic minimums are published and used when the aircraft has the minimum installed navigational equipment to execute the approach. In this case, if the aircraft possessed only NDB, the pilot would then use the first set of minimums.

Additional minimums are lower than the basic minimums and can be used whenever the aircraft has the specified operating equipment. For example, if the aircraft was installed with NDB and VOR equipment, then the additional minimums or lower minimums could be used.

The T-34 may fly the LOC portion of an ILS approach and utilize those minimums as it is not equipped with a glideslope indicator. Additionally, when flying a RNAV (GPS) approach, the T-34 is only authorized to use the Lateral Navigation (LNAV) minimums.

NOTE

> All altitudes on the approach plate are MSL except for three AGL altitudes. All three AGL altitudes are found in the minimums sections and are printed in small type. They are ceiling, HAT and HAA.

320. NOTES SECTION

Viewing the same Kissimmee Gateway approach, notice the remarks and symbols located at the top or bottom of the approach plate.

The T symbol indicates that takeoff minimums are nonstandard and/or special IFR departure procedures are published. IFR departure procedures not published as graphic Departure Procedures and take-off minima are included below and are established to assist pilots in obstacle avoidance. Refer to appropriate service directives for take-off minimums. The **take-off minimums do not apply to military pilots. Our take-off minimums are determined by OPNAV 3710.7 or appropriate service branch regulations**. Airports with departure procedures and/or takeoff minimums are listed alphabetically by airport name in the front of the approach plates booklet and must comply with climb gradient.

The A symbol indicates civilian nonstandard IFR alternate minimums apply to this field. Again, this does not apply to military pilots because our alternate minimums are determined by OPNAV 3710.7 or appropriate regulations, but they must be checked to see if an A NA condition applies to all.

The A NA symbol indicates that the approach minimums are not authorized for alternate selection due to unmonitored facility or the absence of a weather reporting service. This symbol **DOES** apply to Navy/Marine Corps pilots.

The W symbol indicates outages of the WAAS vertical guidance may occur daily at this location due to initial system limitations. WAAS NOTAMS for vertical outages are not provided for this approach. Use LNAV minima for flight planning at these locations, whether as a destination or alternate.

321. AIRPORT DIAGRAM/SKETCH

The airport sketch contains a plan view of the runways, location of obstructions at the airport and other information essential to safe flight. Below the diagram box, the timing from the FAF to the Missed Approach Point is listed for different ground speeds if timing is used for that approach. Ground speeds must be estimated by the pilot based upon the most current wind information. Take the time to familiarize yourself with the various symbols located around the airport sketch.

The airport diagram is provided at select airports and is a full page illustration of the airport. The top of the page is not always north but contains a variation diagram indicating north for orientation. Airport diagrams are specifically designed to assist in the movement of ground traffic at locations with complex runway/taxiway configurations.

322. APPROACH IDENTIFICATION

You have already learned that the information on the top and lower corners identify the approach that is portrayed in the plan view.

The first element of approach identification is derived from the type of facility providing final approach course guidance. The second level of identification based upon the (a) runway number when the approach course is within 30º of the runway centerline or (b) sequential lettering for the airport when the approach course is more than 30º from runway centerline (e.g., VOR – A, VOR – B, etc.).

AIM Definition: Straight-in IAPs are identified by the navigational system providing the final approach guidance and the runway to which the approach is aligned (e.g., VOR RWY 13). Circling only approaches are identified by the navigational system providing final approach guidance and a letter (e.g., VOR A). More than one navigational system separated by a slash indicates that more than one type of equipment must be used to execute the **final approach** (e.g., VOR/DME RWY 31). More than one navigational system separated by the word "or" indicates either type of equipment may be used to execute the **final approach** (e.g., VOR or GPS RWY 15).

VOR/DME approach means that both VOR and DME are required to use the approach. If either the VOR or DME is inoperative, the procedure is not authorized. When DME arcs and DME fixes are authorized in a procedure but the approach name does not include "DME" in the margin identification, the approach may be used without utilizing the DME equipment.

AIM Definition: Multiple approaches with the same guidance will be annotated with an alphabetical suffix beginning at the end of the alphabet and working backwards for subsequent procedures (e.g., ILS Z RWY 28, ILS Y RWY 28, etc.). The existing annotations such as ILS 2 RWY 28 or Silver ILS RWY 28 will be phased out and replaced with the new designations. The Cat II and Cat III designations are used to differentiate between multiple ILSs to the same runway unless there are multiples of the same type.

323. INSTRUMENT APPROACH PROCEDURES QUESTIONS

Answer the following questions in the spaces provided using the appropriate plate and legends.

USE PENSACOLA REGIONAL VOR RWY 8 APPROACH PLATE.

1. This approach would use a _____ frequency tuned to _____ MHz.

2. The published holding pattern is a missed approach pattern. (True/False)

3. What are the bearing and distance to Saufley VOR from PENSI Intersection? _____

4. What is the Minimum Sector Altitude when approaching from the south? _____

5. What course should be selected in the course indicator when on final approach? _____

6. Describe the missed approach. _____

7. What is the HAT for a straight-in approach? _____ (AGL/MSL)

8. What is the height of the highest obstruction at the airport? _____ (AGL/MSL)

9. This approach uses a LF/MF navigational transmitter. (True/False)

10. This approach is a teardrop procedure turn. (True/False)

11. When is the turn from 314º to 134º commenced? _____

USE BARTOW MUNI VOR/DME RWY 9L APPROACH PLATE FOR THE FOLLOWING QUESTIONS.

12. Is the holding portion of this approach required? _____

13. Bartow Municipal has both ASR and PAR approaches. (True/False)

14. Approaching Bartow Municipal, you would contact Daggett Approach Control on 344.2. (True/False)

15. If the field is not in sight, a missed approach should be commenced _____ after passing Lakeland VORTAC inbound.

16. What is the MDA for a circle to land approach to runway 23 (CAT B)? _____

17. How long is runway 23? _____

18. What is the significance of the Maltese cross at BARTZ Int.? _____

USE MIAMI INTL ILS RWY 8R APPROACH PLATE.

19. Approving authority for this approach is the _____.

20. This approach is a _____ as opposed to a procedure-turn-type approach.

21. Terminal information for Miami International can be obtained on the _____ receiver tuned to _____ MHz.

22. IAF for this approach is_____.

23. LAWNN is the FAF. How is this intersection defined in a T-34C? _____

24. What type of approach lights are available on runway 26L? _____

25. RWY 8R has HIRL. What does HIRL stand for? _____

26. What does the in the minimum section mean? _____

USE PENSACOLA NAS TACAN RWY 7L APPROACH PLATE.

27. What is the IAF for this approach? _____ How is it defined? _____

28. The 13 DME arc is 13 NM in length. (True/False)

29. Once established on the 13 DME arc, when should the turn inbound to the field be completed?_____

30. How is FAF identified? _____

31. What is maximum altitude at FAF? _____ The minimum altitude? _____

32. Where is the Missed Approach Point if approach and runway lights are inoperative? _____

33. Runway 01 has arresting gear that can be taken in either direction. (True/False)

34. What are the MDA, HAA, and weather minimums for a circle to land approach to runway 19 (CAT B)? _____

USE JACKSONVILLE NAS TACAN RWY 27 APPROACH PLATE.

35. This approach plate depicts three separate and distinct arcing procedures. (True/False)

36. The holding pattern at MADEN is a mandatory part of the approach. (True/False)

USE AUGUSTA REGIONAL BUSH FIELD ILS RWY 35.

37. Is this approach a precision or nonprecision approach? _____

38. The ILS approach can be flown in a T–34C. (True/False)

39. What is the frequency of the compass locator? _____

40. What is the minimum altitude for glideslope interception? _____

41. What is the localizer frequency? _____

42. What is the degree of glideslope? _____

43. A Navy aircraft could not use the S–ILS–35 minimums for this approach if it did not have glideslope equipment installed. (True/False)

44. An ILS equipped aircraft category B commences the localizer portion of the ILS approach at 120 knots. If the pilot did not see the field at _____ minutes and _____ seconds after the LOM, he must execute a missed approach. The minimum descent altitude at this point is _____ (duty runway 35).

45. VASI is available on runway 35. (True/False)

46. An aircraft arriving over the LOM from SHELY Intersection at 1700 feet would not execute a procedure turn. (True/False)

47. The localizer is a (precision/nonprecision) approach.

48. Can the LOC RWY 35 be used as an alternate when the tower is closed? _____

49. Approaching Bush Field from the NE, what is your Minimum Safe Altitude?
_____

GENERAL:

50. Explain the difference between DH and MDA.

_____

_____

51. Explain the difference between HAT and HAA.

_____

_____

52. Explain the difference between precision and nonprecision approaches.

_____

_____

RADAR APPROACHES:

53. Name the two types of radar approaches. _____ and _____

54. ASR provides _____ information.

55. PAR provides _____, _____and _____ information.

56. Landing minima for nonradar approaches are found in the _____.

57. What does RVR stand for? _____

58. Name two types of precision approaches. _____ and _____

59. Glideslope information for PAR approaches is indicated in degrees and may be found in the_____.

60. Given a degree of glideslope and a ground speed, a normal rate of descent can be determined by utilizing the rate of descent table found in the IFR Enroute Supplement. (True/False)

THIS PAGE INTENTIONALLY LEFT BLANK

324. INSTRUMENT APPROACH PROCEDURES ANSWERS

1. VHF or VOR; 108.8

2. True

3. 189 degrees, 19.5 NM

4. 1800 feet

5. 089

6. At 3 minutes and 39 seconds of timing (based on groundspeed of 120 knots) climb to 2000 feet, then climbing left, turn to 2600 feet direct NUN VOR and hold.

7. 700 feet; AGL

8. 223 feet; MSL (Tower)

9. False

10. False

11. Within 10 NM of the VOR

12. Yes

13. False (it has no radar approaches)

14. False (Tampa Approach Control on 290.3/120.65)

15. 12.1 NM

16. 580 feet MSL

17. 5000 feet

18. Indicates Final Approach Fix (FAF)

19. FAA (See agency in parentheses at top of page)

20. Straight-in

21. VHF; 119.15

22. KROME

23. ILS centerline at 6.3 NM DME
24. MALSR (Medium intensity with runway alignment indicator lights)
25. **H**igh **I**ntensity **R**unway **L**ights
26. Takeoff minimums not standard **or** departure procedure published.
27. Sidny; 205 radial, 14 NM DME of the Pensacola TACAN (CH 119)
28. False
29. Just prior to the 241R so as to arrive wings level, inbound on the 241R
30. 241 radial, 6 NM DME
31. 1300 feet; 1300 feet
32. 1.6 DME
33. True
34. 520 MSL, 492 AGL, (500–1)
35. True
36. False
37. Precision
38. False; T–34C is not ILS equipped.
39. 233 kHz
40. 1700 feet
41. 110.5 MHz
42. 3.00 degrees
43. True
44. 2: 15, 660 feet
45. False

46. True (Unless requested by pilot and approved by ATC)

47. Nonprecision

48. No

49. 3000 feet MSL

50. DH (decision height) applies to precision straight-in landings. MDA (minimum descent altitude) applies to nonprecision approaches, straight-in and circling.

51. HAT (height above touchdown) applies to all straight-in landings. HAA (height above airport) applies to circle to land.

52. Precision approach has a glideslope. (ILS and PAR only) Nonprecision has no glideslope information (VOR, TACAN, NDB, GPS, LOC)

53. ASR and PAR (airport surveillance radar -- precision approach radar)

54. azimuth; range

55. azimuth; range; altitude (glideslope)

56. Approach Plates

57. Runway Visual Range

58. PAR; ILS

59. Radar Minimums section of the Approach Plates

60. False (This chart is inside the back cover of the Low Altitude Instrument Approach Procedures FLIP

CHAPTER FOUR
INSTRUMENT FLIGHT RULES

400. INTRODUCTION

This chapter introduces the student to OPNAVINST 3710.7 criteria for VFR and IFR flight, to include filing requirements, weather for alternation selection, take-off weather requirements, and instrument approach requirements. Filling out the DD 175 Military Flight Plan using GP chapter four is explained.

401. LESSON TOPIC LEARNING OBJECTIVES

TERMINAL OBJECTIVE

1. The student will demonstrate an understanding of weather criteria for filing purposes, and the ability to complete a DD 175 Military Flight Plan.

ENABLING OBJECTIVES

1. Determine when VFR may be used by Navy/Marine Corps pilots for flight.

    a. State the minimum ceiling and visibility for VFR flight in controlled areas.

    b. State cloud clearance requirements for VFR flight.

2. Determine when IFR must be used by Navy/Marine Corps pilots for flight.

3. Determine when weather meets the IFR minimum weather requirements for takeoff for standard and special instrument rated Navy/Marine pilots.

    a. State the weather minimums for takeoff for special instrument rated pilots.

    b. State the basic weather minimums for takeoff for standard instrument rated pilots and the exceptions.

4. Determine when the destination weather meets the minimum weather requirements for that type of IFR approach the pilot plans to execute.

5. Determine when an alternate airport is required.

6. State where Navy/Marine Corps alternate airport weather requirements are listed.

7. Determine when the alternate airport must be forecasting weather to be 3000/3 or better.

8. Determine how to select an alternate airport that meets the forecast weather requirements as the alternate.

9. State whom can/cannot use radar approach minimums as the basis for selecting an alternate airport.

10. State the effective time frame of forecasted weather conditions for the alternate airport.

11. Recall the rules for filling out the Military Flight Plan (DD 175) form according to the Department of Defense Flight Information Publication (GP).

12. Recall specific information that is entered in the Military Flight Plan (DD 175).

4-2 INSTRUMENT APPROACH PROCEDURES

402. WEATHER CRITERIA FOR FILING AND THE DD 175 MILITARY FLIGHT PLAN

Weather Criteria

All pilots are responsible for a complete and thorough knowledge of weather conditions for every flight. The NATOPS General Flight and Operating Instructions Manual (OPNAVINST 3710.7) sets down the specific criteria to be used. It is the responsibility of the pilot-in-command to see that the flight meets these criteria.

Paragraph 5.2.2 of OPNAVINST 3710.7 states:

> Although the choice of flight rules to be followed is normally dictated by weather and mission considerations, sound judgment plays a most important role. There are occasions when VFR may be legally followed by applying the appropriate visibility and cloud clearance criteria. This prerogative should be exercised with reasonable restraint. The established weather criteria are minimums. The pilot should allow a greater margin of safety when operational requirements permit, particularly in terminal areas or when reduced visibility or cloud conditions make flight under VFR questionable. Pilots shall file and retain an IFR clearance to the maximum extent practicable consistent with mission accomplishment.

In order for a Navy/Marine Corps pilot to file a VFR flight plan, certain meteorological conditions must exist. These weather conditions must permit VFR operations for the entire duration of the flight. Weather minimums will be based on existing weather at point of departure and forecast existing weather for the enroute and destination portions of the flight. The weather forecasted at the destination must remain at or above minimums during the period **one hour before until one hour after the estimated time of arrival (ETA)**. The departure and the destination's minimum weather for VFR flight will normally be at least 1000 foot ceiling and 3 miles visibility (basic VFR minimums). Higher minima will be noted in the airport remarks section of the DOD FLIP IFR Enroute Supplement.

The cloud separations and visibilities listed in the following diagram must be adhered to during the enroute phase of the flight (Figure 4-1).

AIRSPACE	FLIGHT VISIBILITY	DISTANCE FROM CLOUDS
CLASS A	NOT APPLICABLE	NOT APPLICABLE
CLASS B	3 STATUTE MILES	CLEAR OF CLOUDS
CLASS C	3 STATUTE MILES	500 FEET BELOW 1000 FEET ABOVE 2000 FEET HORIZONTAL
CLASS D	3 STATUTE MILES	500 FEET BELOW 1000 FEET ABOVE 2000 FEET HORIZONTAL
CLASS E LESS THAN 10,000 FEET MSL AT OR ABOVE 10,000 MSL	 3 STATUTE MILES 5 STATUTE MILES	500 FEET BELOW 1000 FEET ABOVE 2000 FEET HORIZONTAL 1000 FEET BELOW 1000 FEET ABOVE 1 STATUTE MILE HORIZONTAL
CLASS G 1200 FEET OR LESS ABOVE THE SURFACE (REGARDLESS OF MSL ALTITUDE) DAY, EXCEPT AS PROVIDED IN §91.155 (b) NIGHT, EXCEPT AS PROVIDED IN §91.155(b)	 1 STATUTE MILES 3 STATUTE MILES	 CLEAR OF CLOUDS 500 FEET BELOW 1000 FEET ABOVE 2000 FEET HORIZONTAL
MORE THAN 1,200 FEET ABOVE THE SURFACE BUT LESS THAN 10,000 FEET MSL. DAY NIGHT	 1 STATUTE MILES 3 STATUTE MILES	 500 FEET BELOW 1000 FEET ABOVE 2000 FEET HORIZONTAL 500 FEET BELOW 1000 FEET ABOVE 2000 FEET HORIZONTAL
MORE THAN 1,200 FEET ABOVE THE SURFACE AND AT OR ABOVE 10,000 FEET MSL	5 STATUTE MILES	1000 FEET BELOW 1000 FEET ABOVE 1 STATUTE MILE HORIZONTAL

Figure 4-1 Cloud Separations and Visibilities

If VFR flight conditions cannot be met, an IFR flight plan must be filed. This is not the only time an IFR flight plan may be filed. In fact, to decrease the probability of midair collisions, OPNAVINST 3710.7 states that IFR shall be used to the maximum extent practicable. As with VFR, the filing of an IFR flight plan will be based on the **actual** weather at the point of departure (at the time of clearance), the **forecast and existing** weather enroute and the **forecast** weather at both the destination and alternate (if required) during the period one hour before until one hour after the estimated time of arrival.

Takeoff minimums for an IFR flight depend on the type of instrument rating held by the pilot-in-command.

1. Takeoff minimums

    a. Special instrument rating. No takeoff ceiling or visibility minimums apply. Takeoff shall depend on the judgment of the pilot and urgency of the flight.

    b. Standard instrument rating. Published minimums for the available nonprecision approach, but not less than 300 foot ceiling and 1-statute-mile visibility. When a precision approach compatible with installed and operable aircraft equipment is available, with published minimums less than 300-1, takeoff is authorized provided the weather is at least equal to the precision approach minimums for the landing runway in use, but in no case when the weather is less than 200 foot ceiling and one-half statute mile visibility/2400 foot runway visual range (RVR).

Alternate airfield and weather requirements are based on three conditions: (1) the destination weather forecast, (2) whether you are flying a single-piloted or a multi-piloted aircraft, and (3) the communications equipment on board the aircraft (i.e., one or two transceivers). Destination and alternate weather requirements are tied to the weather minimums of the available approaches. All instrument approach procedures and their weather minimums are listed in the LOW ALTITUDE INSTRUMENT APPROACH PROCEDURES. Radar (PAR and ASR) approaches are listed in the front of each volume for the area covered (see examples below Figures 4-2 and 4-3). The minimums for an approach are expressed in a ceiling and visibility and are found in parentheses (500–1 is read as 500 feet ceiling and 1 statute mile visibility).

RADAR INSTRUMENT APPROACH MINIMUMS

MERIDIAN NAS (KNMM), (Mc CAIN FIELD), MS (12 JUL 01 USN) ELEV 317

RADAR - (E) 134.1 266.8 300.4 310.8 322.0 325.2 328.4 346.0 363.6 ▽

	RWY	GS/TCH/RPI	CAT	DH/ MDA-VIS	HAT/ HAA	CEIL-VIS
PAR (d)	19L (b)	3.0°/45/1060	ABCDE	**417**-¼	100	(100-¼)
	1L (b)	3.0°/34/744	ABCDE	**455**-½	200	(200-½)
	1R	3.0°/38/888	ABCDE	**471**-¾	200	(200-¾)
	19R	3.0°/36/854	ABCDE	**495**-¾	200	(200-¾)
ASR (c)	19L (c)		AB	**780**-½	463	(500-½)
			C	**780**-¾	463	(500-¾)
			D	**780**-1	463	(500-1)
			E	**780**-1¼	463	(500-1¼)
	1L (c)		AB	**740**-½	485	(500-½)
			C	**740**-¾	485	(500-¾)
			D	**740**-1	485	(500-1)
			E	**740**-1¼	485	(500-1¼)
	28		ABC	**680**-1	374	(400-1)
			DE	**680**-1¼	374	(400-1¼)
	19R		AB	**700**-1	405	(400-1)
			CD	**700**-1¼	405	(400-1¼)
			E	**700**-1½	405	(400-1½)
	1R		AB	**700**-1	429	(400-1)
			C	**700**-1¼	429	(400-1¼)
			DE	**700**-1½	429	(400-1½)
CIR (c)	19L/R,1L/R,28		AB	**820**-1	503	(600-1)
			C	**820**-1½	503	(600-1½)
			D	**880**-2	563	(600-2)
			E	**980**-2¼	663	(700-2¼)

Figure 4-2 Radar Instrument Approach Minimums

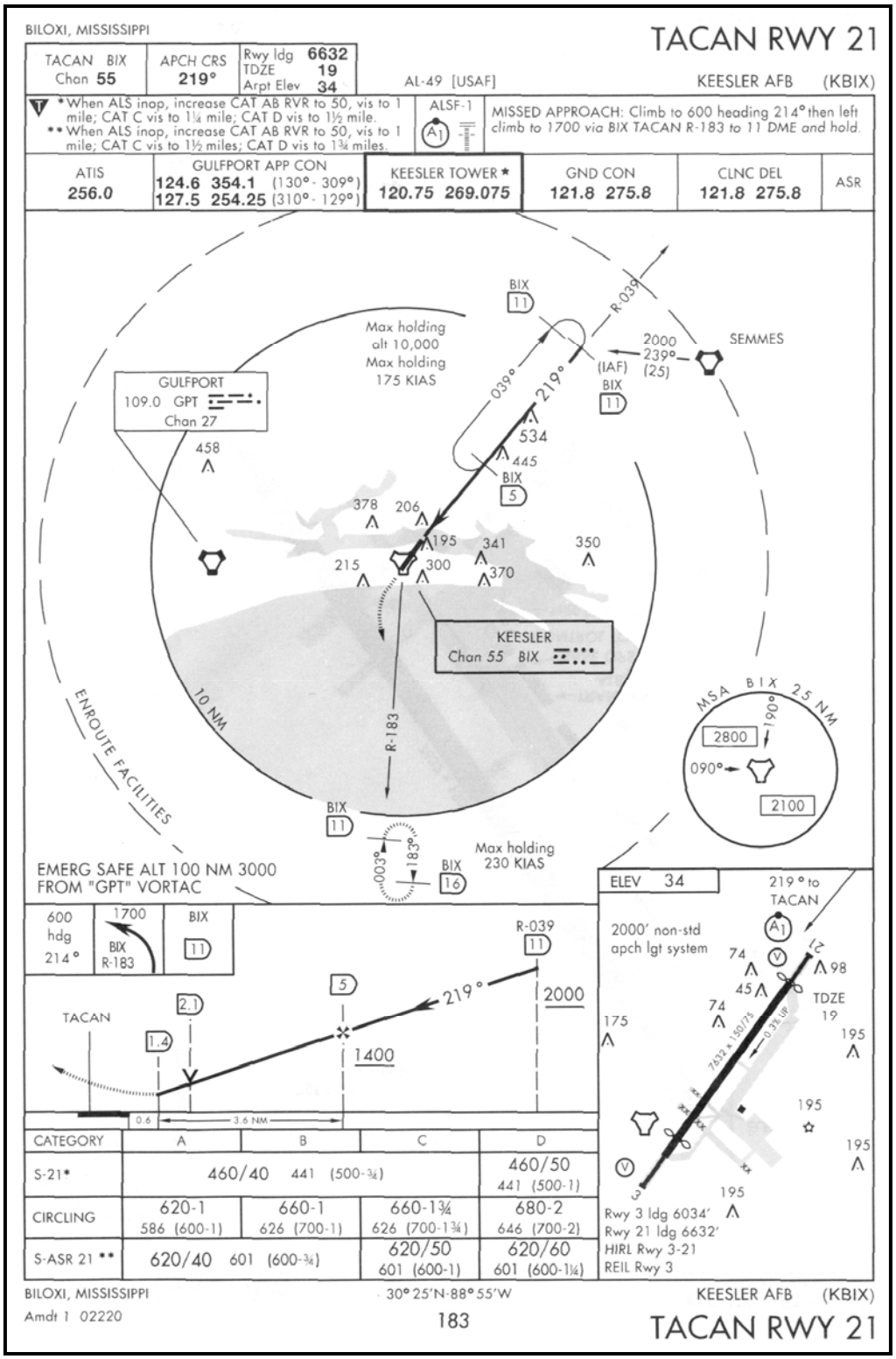

Figure 4-3 TACAN RWY 21

The following chart can be found in OPNAV 3710.7 and is to be used by Navy/Marine Corps pilots when determining alternate weather requirements.

DESTINATION WEATHER ETA plus and minus one (1) hour	ALTERNATE WEATHER ETA plus and minus one (1) hour		
0–0 up to but not including published minimums	3,000 – 3 or better		
Published minimums up to but not including 3,000 -- 3 (single piloted absolute minimums 200 –1/2)	NON-PRECISION	PRECISION	
		ILS	PAR
	* Published minimums plus 300-1	Published minimums plus 200–1/2	• Published minimums plus 200–1/2
3,000 – 3 or better	No alternate required		
* In the case of single-piloted or other aircraft with only one operable UHF/VHF transceiver, radar approach minimums may not be used as the basis for selection of an alternate airfield.			

Figure 4-4 OPNAV 3710.7 (Figure 4.1)

DESTINATION WEATHER ETA plus and minus one (1) hour	ALTERNATE WEATHER ETA plus and minus one (1) hour
0–0 up to but not including published minimums	3,000 – 3 or better

Figure 4-5 Forecasted Weather

When the destination weather is forecasted to be **below** the lowest approach minimums you can use (in other words, your destination is "below minimums") you must find an airfield within your aircraft's range that has weather forecasted to be at or above 3000 foot ceiling and 3 miles visibility (Figure 4-5). This airfield will be listed as the alternate on your IFR flight plan.

The "lowest approach minimums" at your destination will depend on the navigational equipment installed in your aircraft and the type of approaches available at the destination. PAR and ILS approaches have the lowest minima of all published instrument approaches. You must consult the appropriate Low Altitude Instrument Approach Procedures Volume to determine if your destination has a PAR approach and the approach minimums. The only equipment required in the aircraft to make a radar approach (PAR/ASR) is a two-way communications transceiver.

RADAR INSTRUMENT APPROACH MINIMUMS

MERIDIAN NAS (KNMM), (Mc CAIN FIELD), MS (12 JUL 01 USN) ELEV 317

RADAR - (E) 134.1 266.8 300.4 310.8 322.0 325.2 328.4 346.0 363.6 ▽

	RWY	GS/TCH/RPI	CAT	DH/ MDA-VIS	HAT/ HAA	CEIL-VIS
PAR ⓓ	19L ⓑ	3.0°/45/1060	ABCDE	**417**-¼	100	(100-¼)
	1L ⓑ	3.0°/34/744	ABCDE	**455**-½	200	(200-½)
	1R	3.0°/38/888	ABCDE	**471**-¾	200	(200-¾)
	19R	3.0°/36/854	ABCDE	**495**-¾	200	(200-¾)
ASR ⓐ	19L ⓒ		AB	**780**-½	463	(500-½)
			C	**780**-¾	463	(500-¾)
			D	**780**-1	463	(500-1)
			E	**780**-1¼	463	(500-1¼)
	1L ⓒ		AB	**740**-½	485	(500-½)
			C	**740**-¾	485	(500-¾)
			D	**740**-1	485	(500-1)
			E	**740**-1¼	485	(500-1¼)
	28		ABC	**680**-1	374	(400-1)
			DE	**680**-1¼	374	(400-1¼)
	19R		AB	**700**-1	405	(400-1)
			CD	**700**-1¼	405	(400-1¼)
			E	**700**-1½	405	(400-1½)
	1R		AB	**700**-1	429	(400-1)
			C	**700**-1¼	429	(400-1¼)
			DE	**700**-1½	429	(400-1½)
CIR ⓐ	19L/R,1L/R,28		AB	**820**-1	503	(600-1)
			C	**820**-1½	503	(600-1½)
			D	**880**-2	563	(600-2)
			E	**980**-2¼	663	(700-2¼)

Figure 4-6 Radar Instrument Approach Minimums

The ceiling and visibility for the PAR 19L approach are published at 100–¼ (Figure 4-6). OPNAV 3710.7 places a restriction on the use of approaches by single-piloted aircraft T–34C. The absolute minimums for a single-piloted aircraft are 200 foot ceiling/HAT and visibility of ½ mile/2400 feet RVR. Thus, the approach minimums for a T–34C executing a PAR 19L approach would be 200 – ½ (HAT would be raised to 200 feet and the DH to 517 feet).

If the destination does not have a radar approach, you must use a nonprecision NAVAID approach. Since the T–34C is VOR and TACAN equipped, you can execute either of these approaches, depending on which is available at your destination.

Published minimums up to but not including 3,000 – 3 (single piloted absolute minimums 200 – 1/2)	NON-PRECISION	PRECISION	
		ILS	PAR
	*Published minimums plus 300–1	Published minimums plus 200–1/2	*Published minimums plus 200–1/2

*In the case of single-piloted or other aircraft with only one operable UHF/VHF transceiver, radar approach minimums may not be used as the basis for selection of an alternate airfield.

Figure 4-7 Alternate Weather Requirement

One other factor must be considered when determining your destination's lowest approach minimums. That factor is the runway you expect to be in use upon arrival. For example, consider an airfield that has two runways, 9–27 and 18–36. The radar approach data and the approach plates show that the airfield has PAR approaches to runways 9 and 27 and nonprecision approaches to all the runways. After further preflight planning, you find that runway 9–27 is NOTAMed closed and the wind is forecasted to remain from the south at 10–15 knots all day. Your destination's lowest approach minimums will be based on a nonprecision approach to runway 18.

When the destination weather is forecasted to be above your lowest approach minimums but below 3000 foot ceiling and 3 miles visibility, you must also select an alternate airfield. As you can see in Figure 4-7, the alternate weather requirement may be based on one of three possibilities: (1) Nonprecision approach, (2) ILS, and (3) PAR. (The T–34C is currently not equipped for executing an ILS. A single-piloted aircraft or an aircraft with only one transceiver may not use PAR/ASRs for alternate flight planning.)

OPNAV 3710.7 defines a single-piloted aircraft as “any aircraft that has only one set of flight controls or tandem cockpit, or any aircraft that has two sets of flight controls and instruments and is being operated by only one pilot who meets the requirements of the NATOPS manual for that model aircraft”. OPNAV further defines a student naval aviator (student pilot) as “an individual undergoing training who is not designated as a naval aviator.” Thus, the T–34C is always a single-piloted aircraft.

All T–34C pilots must take (when determining alternate weather minimums) the approach minimums for the selected nonprecision approach (VOR or TACAN) at the alternate and add 300 feet and 1 mile to the weather minimums. For example, NAS Pensacola has a VOR approach to runway 19 with approach minimums of 500–1. To use Pensacola as an alternate, it must be forecasting at least 800 foot ceiling and 2 miles visibility (ETA ±1 HR).

The remarks sections of approach plates often contain conditions that affect ALTERNATE selection and weather requirements.

XXXIV

RADAR INSTRUMENT APPROACH MINIMUMS

MEMPHIS INTL, TN (17 JAN 85 FAA) **ELEV 33**
RADARⓐ - **(E)** 126.2 257.8 291.6 318.3 ▽

	RWY	GS/TCH/RPI	CAT	OH/ MDA-VIS	HAT/ HAA	CEIL-VIS
ABR	36L		ABC	700/24	326	(400-½)
			D	700/50	380	(400-1)
	36R		ABC	700/24	368	(400-½)
			D	700/50	368	(400-1)
	18L		ABC	680/24	390	(400-½)
			D	680/50	390	(400-1)
	27		ABC	680-½	393	(400-½)
			D	680-1	383	(400-1)
	9		AB	700/24	441	(500-½)
			C	700/40	441	(500-¾)
			D	700/50	441	(500-1)
	18R		AB	740/24	447	(500-½)
			C	740/40	447	(500-¾)
			D	740/50	447	(500-1)
CIR	9-2T, 18L-36R, 18R-36L		AB	800-1	468	(500-1)
			C	800-1½	568	(600-1½)
			D	900-2	568	(600-2)

ⓐMin alt 2 NM for Rwy 18R 880, all other rwy 900. Min alt FAF 1800. CAT D S-36R, S-36L increase vis to RVR 6000. S-27 VIS increased 1/4 SM for inop MALSR or ALSF-2.

Figure 4-8 Radar Instrument Approach Minimums

At Memphis INTL, when the MALSR or ALSF–2 is inoperative, the listed restrictions must be applied.

CATEGORY	A	B	C	D
S-9 *	460-¾ 438 (500-¾)		460-1 438 (500-1)	460-1½ 438 (500-1¼)
CIRCLING	480-1 458 (500-1)		480-1½ 458 (500-1½)	580-2 558 (600-2)
S-PAR 9	122-¼ 100 (100-¼) GS 3.0°			

*When apch lgt inop, increase vis min ¼ mile all cat.

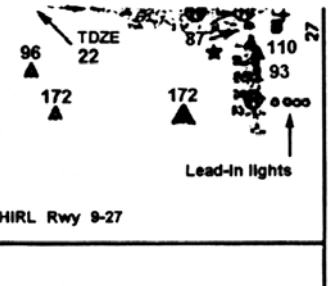

TACAN RWY 9 30°14'N–81°41'W 135

JACKSONVILLE, FLORIDA
JACKSONVILLE NAS
(TOWERS FIELD) (KNIP)

Figure 4-9 Restrictions

At NAS Jacksonville, when the approach lighting is inoperative, visibility minimums must be increased by ¼ mile for all categories (Figure 4-9).

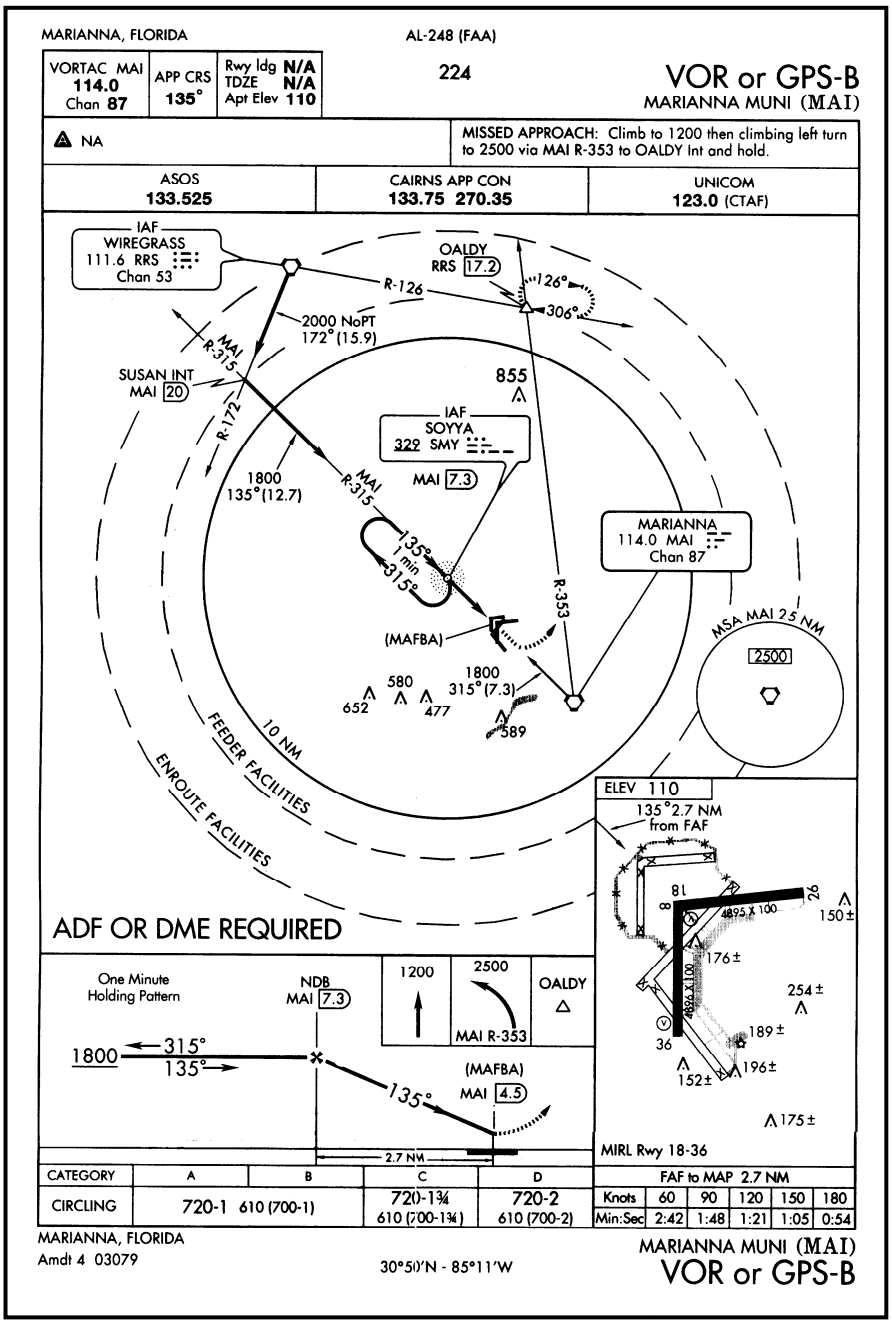

Figure 4-10 Marianna Municipal Airport

Marianna Municipal Airport cannot be used as the alternate. A NA-IFR minimums are NOT authorized for alternate use due to an unmonitored facility or the absence of weather reporting service. Also, when A is listed, check the IFR alternate minimum section to determine if there are temporary restrictions as shown in Figure 4-11.

IFR ALTERNATE MINIMUMS

CEILING AND VISIBILITY MINIMUMS NOT APPLICABLE TO USA/USN/USAF. PILOTS MUST REVIEW THE IFR ALTERNATE MINIMUMS NOTES FOR ALTERNATE AIRFIELD SUITABILITY.

NA - means alternate minimums are not authorized due to unmonitored facility or absence of weather reporting service. Civil pilots see FAR 91. USA/USN/USAF pilots refer to appropriate regulations.

JACKSONVILLE, FL
CRAIG MUNI (CRG) .ILS RWY 32
VOR OR GPS RWY 14
[1]NA when control tower closed.
[2]Category D, 800-2¼.

Figure 4-11 IFR Alternate Minimums

Normally, an alternate must have an instrument approach compatible with operable installed aircraft navigational equipment. If no suitable instrument approach is available, then the forecast weather must permit a descent from the minimum enroute altitude in VFR weather conditions. Let's suppose that you want to use Orlando Sanford, Florida as your alternate. Sanford's published instrument approaches are an NDB RWY 9 and an ILS RWY 9L (no VOR or TACAN approaches). If Sanford is forecasting clear and 7 miles visibility, then a T-34C pilot can easily use it as an alternate because the forecast weather will allow a VFR approach from the minimum enroute altitude.

Flight plans may be filed to destinations that do not have published approaches compatible with operable installed aircraft navigation equipment. In this case, a suitable alternate must have a published instrument approach the aircraft can execute in the event of lost radio communications.

3,000 – 3 or better	No alternate required

Figure 4-12 No Alternate Required

When the destination weather is forecasted to be 3000 feet and 3 miles visibility or better, an alternate is not required. (Figure 4-12) (An alternate may be required for other reasons, so check all applicable publications.)

403. IFR FLIGHT PLAN

A pilot will file a military flight plan (DD 175) with Base Ops or FAA Form 7233-1 with FSS. Detailed information concerning the correct procedures for filling out the flight plan can be found in FLIP GP, Chapter Four. Students are **strongly encouraged** to utilize this section. OPNAVINST 3710.7 states that a flight plan will be filed for all flights of naval aircraft. The flight plan serves two purposes. Primarily it is used to relay the desires of the pilot to ATC so

that a clearance may be issued for the flight. Secondly, it provides search and rescue facilities the necessary information on the planned route of flight, should it be needed.

OPNAVINST 3710.7 also states the following:

1. Delivery of a properly prepared flight plan form to duty personnel at an established Base Operations Office at the point of departure assures that the appropriate ARTCC/FSS will be furnished with the essential elements of the flight plan and that a takeoff report will be made.

2. If no communications link exists between the point of departure and the ARTCC/FSS, the pilot may relay the flight plan to an appropriate FSS by commercial telephone. When unable to file in person or by telephone, the flight plan may be filed by radio as soon as possible after takeoff. However, flight in controlled airspace in IMC weather conditions without an ATC clearance is prohibited.

3. Where airfield used is shared by both a military and a civil activity, the flight plan shall be submitted at the military installation. (At most civil airports without a military tenant, the pilot will file the flight plan with FSS via a direct telephone line.)

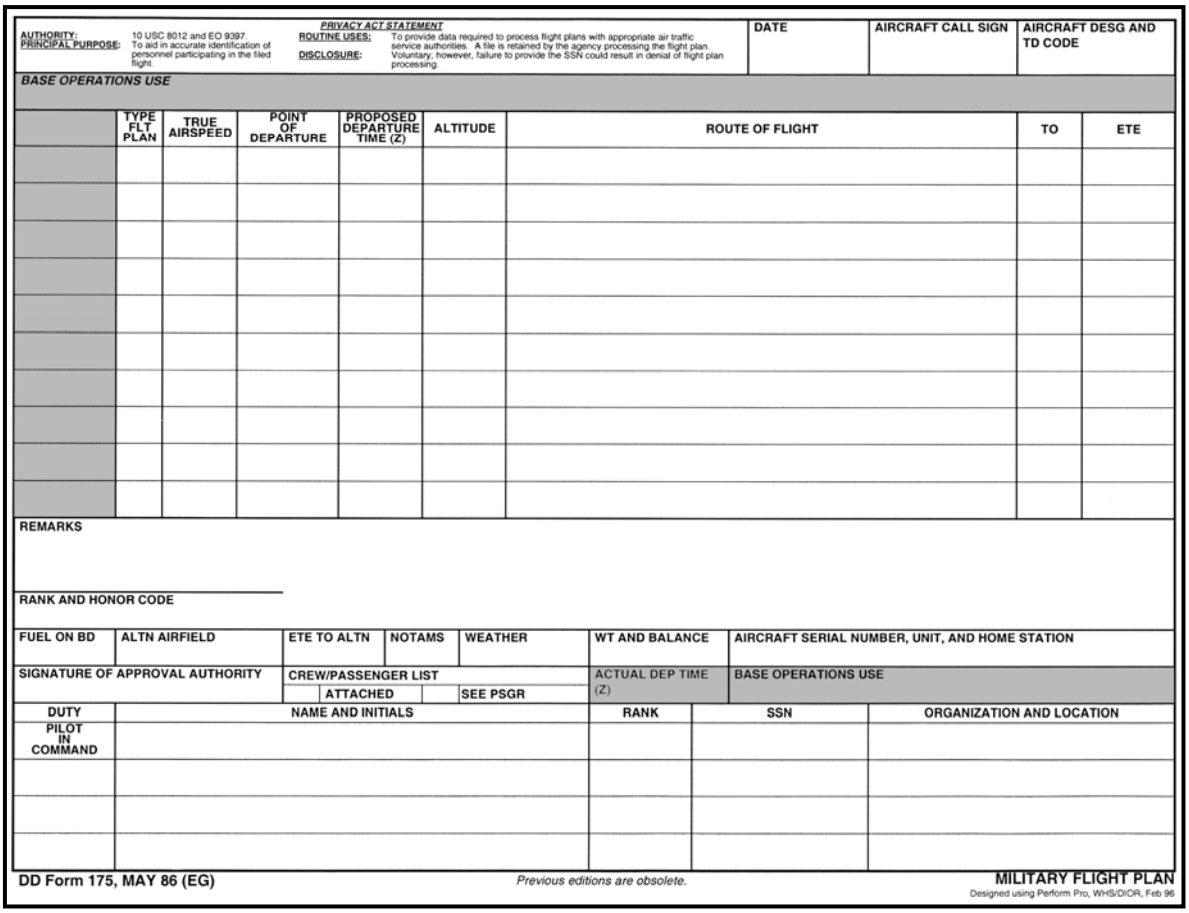

AUTHORITY: 10 USC 8012 and EO 9397.
PRINCIPAL PURPOSE: To aid in accurate identification of personnel participating in the filed flight.
PRIVACY ACT STATEMENT
ROUTINE USES: To provide data required to process flight plans with appropriate air traffic service authorities. A file is retained by the agency processing the flight plan.
DISCLOSURE: Voluntary; however, failure to provide the SSN could result in denial of flight plan processing.

DATE	AIRCRAFT CALL SIGN	AIRCRAFT DESG AND TD CODE

BASE OPERATIONS USE

	TYPE FLT PLAN	TRUE AIRSPEED	POINT OF DEPARTURE	PROPOSED DEPARTURE TIME (Z)	ALTITUDE	ROUTE OF FLIGHT	TO	ETE

REMARKS

RANK AND HONOR CODE

FUEL ON BD	ALTN AIRFIELD	ETE TO ALTN	NOTAMS	WEATHER	WT AND BALANCE	AIRCRAFT SERIAL NUMBER, UNIT, AND HOME STATION

SIGNATURE OF APPROVAL AUTHORITY	CREW/PASSENGER LIST			ACTUAL DEP TIME (Z)	BASE OPERATIONS USE
		ATTACHED	SEE PSGR		

DUTY	NAME AND INITIALS	RANK	SSN	ORGANIZATION AND LOCATION
PILOT IN COMMAND				

DD Form 175, MAY 86 (EG) Previous editions are obsolete. MILITARY FLIGHT PLAN
Designed using Perform Pro, WHS/DIOR, Feb 96

Figure 4-13 DD 175

DATE	AIRCRAFT CALL SIGN	AIRCRAFT DESIG AND TD CODE

Figure 4-14 Aircraft Call Sign

1. The first box on the DD 175 is the date box and is self-explanatory.

2. The next section to be filled out is the AIRCRAFT CALL SIGN. Navy/Marine Corps aircraft may use radio call signs consisting of the Navy service code of "VV" or the Marine service code of "VM" and the assigned letter/letter or number/letter (tail markings) plus not less than two or not more than three digits.

3. There are two entries to be made in the next section. The first entry is the aircraft designation and is self-explanatory. In a formation flight, include the number of aircraft with the designator of the flight leader's aircraft (One F-4 and one T-38 with the F-4 as the flight leader would be written as 2/F_4.) DO NOT USE AIRCRAFT MODEL SUFFIXES AS THEY COULD BE CONFUSED WITH THE TRANSPONDER CODE.

The second entry designates the operable transponder and navigation equipment (TD code) aboard the aircraft. A list of TD codes is provided in FLIP GP, Chapter 4.

4. Enter the type of flight plan to be flown.

TYPE FLT PLAN	TRUE AIRSPEED	POINT OF DEPARTURE	PROPOSED DEPARTURE TIME (Z)	ALTITUDE

Figure 4-15 Type of Flight Plan

NOTE

I = Instrument Flight Rules V = Visual Flight Rules

5. The **initial cruising** true airspeed is entered next. If the pilot intends to change airspeed on subsequent legs of the flight, he must notify ATC while airborne. This entry is not required on VFR local flights.

6. In the POINT OF DEPARTURE box, the pilot should enter the location identifier of the airport from which he is leaving. The location identifier is found in the IFR Enroute Supplement and in the Terminal Publications (Approach Plates). If the identifier has four letters, do not use the letter "K" on the DD 175. For domestic flights, use the last three letters of the identifier. "KNPA" will be entered as "NPA." (Four –letter identifiers are to be used on International Flight Plans.) Use the airport name **only** if the airport has **no** location identifier.

7. The pilot should enter the **proposed** departure time using coordinated universal time (Z). Time zone conversion/factors for all airports can be found in the IFR Supplement.

8. The next entry will be the altitude/flight level requested for the first leg of the flight. Enter the initial requested altitude in hundreds of feet (120).

9. When filing an IFR flight plan, a pilot can request one of four types of instrument departures. The four types are DEPARTURE PROCEDURES (DP), RADAR DEPARTURE, IFR CLIMB (DIRECT TO NAVAID), and VFR DEPARTURE. If a pilot elects to use a DP, the DP's coded identifier or the name and number of the DP plus the "termination point" or "published transitional fix" will be entered as the first items in the ROUTE OF FLIGHT section. A pilot filing a flight plan requesting CLIOS ONE departure with a transition point of CLIOS would write the entry as follows (these DPs are referred to as SIDs in the GP.

ROUTE OF FLIGHT	TO
CLIOS 1 • CLIOS	

Figure 4-16 Route of Flight

If a RADAR DEPARTURE, VFR climb, or an IFR climb on course is requested, the location identifier of the fix where entry into the route structure will be made will be entered as the first item in the ROUTE OF FLIGHT section. An entry in the "REMARKS" section must be made for RADAR and VFR climb departures.

A pilot filing a flight plan requesting an IFR climb departure to Crestview (CEW) would write the entry as follows:

ROUTE OF FLIGHT	TO
CEW	

Figure 4-17 IFR Climb Departure to Crestview

The ROUTE OF FLIGHT section should contain enough information to clearly indicate the proposed flight path. Location identifiers will be used for NAVAIDs (VORs, TACANs, and VORTACs) which define the route of flight. (DO NOT WRITE OUT THE NAME OF A NAVAID – ALWAYS USE THE THREE–LETTER IDENTIFIER.) Names will be used for intersections that define the route of flight.

ROUTE OF FLIGHT	TO
CEW NSE	

Figure 4-18 Three Letter Identifier

When the flight path between fixes is an airway or jet route, enter the airway/jet route number followed by the fix or intersection where you will leave the airway. The absence of an airway identifier denotes a direct leg. (Do not use the symbol D→ or the word "direct.")

For IFR flight plans, the last fix entered is the identifier of the nearest appropriate IAF, NAVAID, first point of intended landing, or published fix, which most clearly establishes the route of flight to the destination, or the coded identifier of a Standard Terminal Arrival (STAR). For the IFR course we will always use the IAF.

When the identifier for the IAF and the destination airport are the same, enter both in their respective spaces. For example: A flight terminating at Crestview and using the Crestview VOR as its IAF would appear as follows:

ROUTE OF FLIGHT	TO
NUN PENSI V198 CEW	**CEW**

Figure 4-19 Same IAF Identifier and Destination Airport

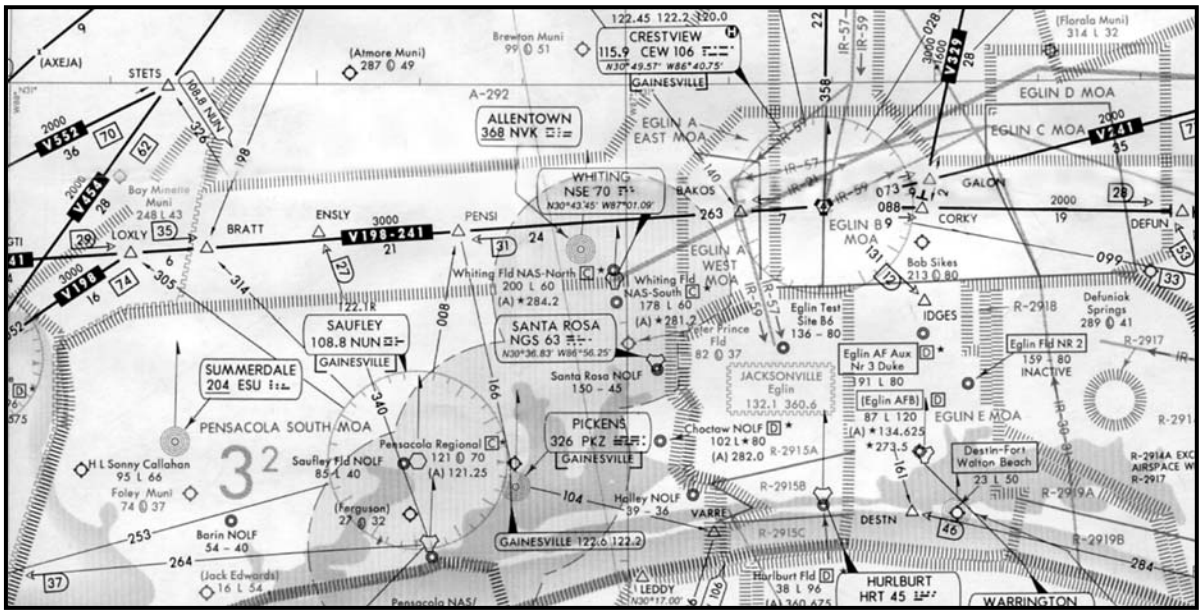

Figure 4-20 Area Map

For TACAN or VOR/DME equipped aircraft, the initial approach fix may be designated by a radial and distance from a specific TACAN or VORTAC facility. The radial and distance will be preceded first by the three-letter identifier of the station. To determine what radial and distance define an IAF for a specific approach, check the appropriate approach plate.

Example: The IAF for the TACAN RWY 7R approach at NAS Pensacola is located on the 205 radial 14 DME from the station and is written as NPA 205014.

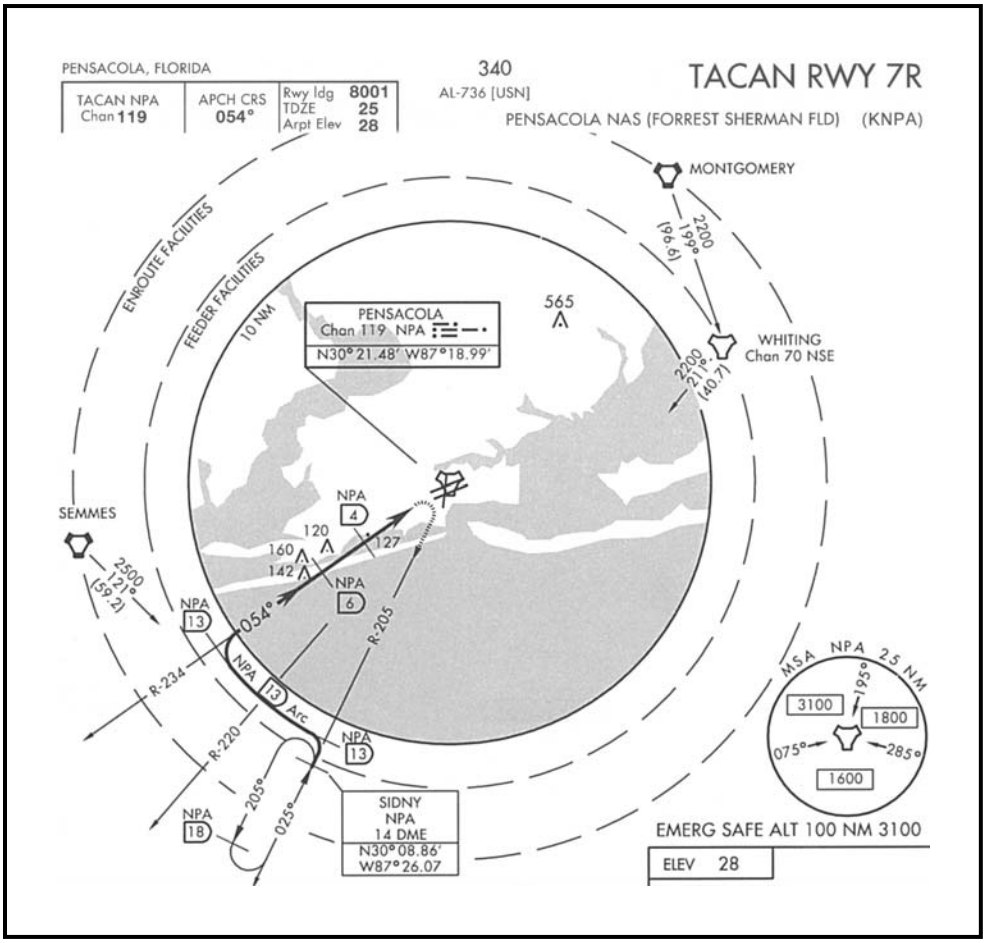

Figure 4-21 TACAN RWY 7R

NOTE

DME is a term signifying an electronic fix measured in NM from a navigation aid (VORTAC or TACAN) on the specified radial.

A pilot is planning an IFR flight from Bates Field (MOB) to NAS Pensacola (NPA). Route of flight is direct Brookley VORTAC (BFM), V198 to Bratt Intersection, direct to the IAF for the TACAN RWY 7R instrument approach at NAS Pensacola (IAF located at the 14_mile DME fix on the 205 radial of NPA). When the IAF has a five-letter name, either the name or the NAVAID identifier/radial/DME combination may be used. The proper entries in the ROUTE OF FLIGHT section of the DD 175 are as follows:

ROUTE OF FLIGHT	TO
BFM V198 BRATT NPA 205014	**NPA**
BFM V198 BRATT SIDNY	**NPA**

Figure 4-22 Route of Flight Entries

NOTE

From Brookley VORTAC on V198, the next fix entered in the route of flight will be the fix where a transition to another airway or a direct leg is made. Do not enter intermediate NAVAIDs or fixes while on V198. The absence of an airway number in the route of flight denotes a direct leg.

On a VFR flight plan or segment, the last fix entered in the ROUTE OF FLIGHT section is the fix from which the last leg of the flight is begun.

10. The three-letter identification identifier of the **destination** airfield will be entered in the **TO** box.

11. The estimated time enroute (ETE) for an IFR flight plan will be the time from takeoff to the IAF at the destination **exclusive of the time anticipated for enroute delays**. This entry does not include the approach time. ETE will be entered using the hours + minutes format (e.g., 1+30).

The estimated time enroute for a VFR flight plan or segment will be computed from takeoff to arrival over the destination airfield, **including** known or preplanned delays.

ETE

Figure 4-23 ETE

12. The pilot should enter only information essential to safe and efficient ATC. Entries might include "no anti-icing equipment," "request radar departure," or "request VFR climb."

REMARKS

Figure 4-24 Remarks

13. The RANK/HONOR CODE section is used for flights carrying VIPs. The codes can be found in FLIP GP. The VIP's name may be included after the code.

RANK AND HONOR CODE

Figure 4-25 Rank and Honor Code

14. Enter the total time that the aircraft can stay aloft while flying the planned route with the fuel available at takeoff. (The Chief of Naval Air Training limits this to 3+00 for the T–34C.)

FUEL ON BD

Figure 4-26 Fuel on BD

15. If you are planning an IFR flight which requires an alternate airfield, the location identifier will be entered in this box. Leave blank if no alternate is required.

16. The ETE TO ALTN is to the alternate **airport**. **This entry includes time needed to shoot an approach**. Since we flight plan only to the IAF in the T–34C, we need to account for the approach time. This is accomplished by adding 10 minutes to the estimated time enroute to the IAF.

ALTN AIRFIELD	ETE TO ALTN

Figure 4-27 Alternate Airfield and ETE to Alternate

17/18. Used as a reminder for pilots to check all NOTICE TO AIRMEN and weather information prior to flight.

NOTAMS	WEATHER

Figure 4-28 NOTAMS and Weather

19. When filing a flight plan, the pilot shall either file a DD Form 365-4 with the clearance or certify that the loading for the proposed flight does not exceed the loading limits. When making a certification, he will cite a previously filed and current DD Form 365–4. One of the following entries shall be made in the block:

a. N/A -- when the aircraft flight manual does not require completion of DD Form 365-4 for each mission.

b. ATTACHED -- if the DD Form 365–4 is attached.

c. (FILED AT) _____ (DATE) _____ when citing a previously filed DD Form 365–4.

For the T–34C, when maximum weight exceeds 266 pounds for the forward crew, 250 pounds for the aft crew, or total crew weight exceeds 450 pounds, the weight and balance of the aircraft shall be checked to determine that gross weight and CG limitations are not exceeded. In this case N/A will usually be the entry.

WT AND BALANCE

Figure 4-29 Weight and Balance

20. The AIRCRAFT SERIAL NUMBER portion should contain the complete aircraft bureau number. The number of the lead aircraft should be entered for formation flights.

The unit of assignment is normally a squadron and the home station is normally the Naval Air Station at which the squadron is based. The airport location identifier will be entered for home station.

EXAMPLE**:** A T–34C attached to CTW–5, NAS Whiting Field (NSE)

AIRCRAFT SERIAL NUMBER, UNIT, AND HOME STATION

Figure 4-30 Aircraft Serial Number, Unit and Home Station

A unique situation is in effect at NAS Whiting Field. The T–34C aircraft are assigned to the Commanding Officer, Training Air Wing FIVE and NAS Corpus Christi Wing FOUR vice the Commanding Officers of the squadrons as in the fleet.

AIRCRAFT SERIAL NUMBER, UNIT, AND HOME STATION
164121/CTW-5/NSE

Figure 4-31 Aircraft Serial Number, Unit and Home Station – NAS Whiting Field

21. This box is to be signed by the pilot in command. Navy/Marine Corps pilots act as their own approving authority.

SIGNATURE OF APPROVAL AUTHORITY

Figure 4-32 Signature of Approval Authority

22. The name of the pilot in command **must** appear in the crew list. The names of all other crew members and passengers will be entered in accordance with appropriate service instructions. (OPNAVINST 3710.7 states that the crew members will be entered on the DD 175 and passengers will be listed on either the DD 175 or a separate passenger manifest.) For formation flights, list crew members and passengers together by aircraft and indicate aircraft tail number. If a passenger manifest is used, check the block "**See Passenger Manifest**."

CREW/PASSENGER LIST			
	ATTACHED		SEE PSGR

DUTY	NAME AND INITIALS	RANK	SSN
PILOT IN COMMAND			

DD Form 175, MAY 86 (EG) *Previous editions are obsolete.*

Figure 4-33 Crew/Passenger List

Enter the organization and location identifier or name (VT–2/NSE). When the crew is composed of members from more than one branch of the military service, identify the branch.

ORGANIZATION AND LOCATION
VT-2/NSE

Figure 4-34 Organization and Location

404. STOPOVER FLIGHT PLANS

Stopover flight plans are utilized by pilots whenever stops at more than one airport are intended. In many instances, a particular destination is too distant to reach in one flight. Therefore, it is necessary to make one or more fueling stops in order to reach the final destination airport. The stopover flight plan enables a pilot to fill out one DD 175 at the beginning of the flight which will cover the entire trip. Filling out a DD 175 in this manner saves the pilot the trouble of having to file a separate flight plan at each airport. The stopover flight plan is identical to the "single-flight" plan, with a few exceptions.

After the initial flight, each subsequent flight must include, in parenthesis after the Destination IAF, the "Hours of Fuel on Board," "Alternate" (if required), and the "ETE to Alternate" for that flight.

TYPE FLT PLAN	TRUE AIRSPEED	POINT OF DEPARTURE	PROPOSED DEPARTURE TIME (Z)	ALTITUDE	ROUTE OF FLIGHT	TO	ETE
I	180	MOB	1600	90	LOXLY V198 MONIA NIP185013	NIP	1+15
I	180	NIP	1825	120	CEW NSE (3+00 NPA 0+35)	NSE	1+05

Figure 4-35 Stopover Flight Plans

405. ENROUTE DELAY FLIGHT PLANS

An enroute delay flight plan is used for flights that intend to delay at an airport, area, or geographical point enroute before proceeding to the destination.

1. Delays where you will leave the airway for practice approaches, landings, or other activities will be explained under each leg where a delay will occur. The explanation remark will be preceded by the letter (R) and will include the letter "D," duration of delay, location of delay and final destination, e.g., (R) D 0+30 ABQ REE (the aircraft was enroute to Reese AFB (REE) and requested a 30-minute enroute delay at Albuquerque VORTAC (ABQ)). For the leg of flight after the delay entry, complete the boxes on the next line and continue with the route of flight to destination IAF, to the point of additional enroute delays, or to the fix where VFR flight will begin.

2. Delays where you want to **hold** at a fix will normally be written as one continuous flight. The holding delay will be shown immediately after the holding fix followed by the continued route of flight. **No remarks or void times are necessary**.

A 45-minute delay at Crestview (CEW) to shoot two practice approaches with a final destination of Navy Jacksonville (NIP) would be written:

TYPE FLT PLAN	TRUE AIRSPEED	POINT OF DEPARTURE	PROPOSED DEPARTURE TIME (Z)	ALTITUDE	ROUTE OF FLIGHT	TO	ETE
I	180	MOB	*0800*	90	BFM 198 CEW CEW		0+30
					®D 0+45 CEW NIP		
I	190	CEW	0915	170	CORKY V198 MONIA MADEN	NIP	1+00

Figure 4-36 Terminal Area Delay Flight Plan

A 15-minute delay at Crestview (CEW) for holding with a final destination of Navy Jacksonville (NIP) would be written:

TYPE FLT PLAN	TRUE AIRSPEED	POINT OF DEPARTURE	PROPOSED DEPARTURE TIME (Z)	ALTITUDE	ROUTE OF FLIGHT	TO	ETE
I	180	MOB	*0800*	90	BFM V198 CEW/D 0+15 V198		
					MONIA MADEN	NIP	1+30

Figure 4-37 Holding Delay Flight Plan w/Delay at Crestview

406. COMPOSITE FLIGHT PLAN

For a flight plan involving VFR operation for one portion of the flight and IFR for another portion:

1. Enter the appropriate codes for IFR, VFR, or D–VFR. Do not combine "IFR" and "VFR" route segments on the same line entry.

2. For IFR/VFR or VFR/IFR, the last entry in the Route of Flight section is the fix/facility at which the transition is made.

3. Enter an ETE for each portion of the flight using the IFR and VFR flight plan rules.

Example: A pilot plans to depart Mobile Regional (MOB) to NAS Jacksonville (NIP). The route of flight is direct to Brookley VORTAC (BFM), V198 MONIA Intersection, direct to the IAF for an approach to NAS Jacksonville.

The pilot wishes to file IFR to Crestview VORTAC (CEW) and fly the rest of the flight VFR:

TYPE FLT PLAN	TRUE AIRSPEED	POINT OF DEPARTURE	PROPOSED DEPARTURE TIME (Z)	ALTITUDE	ROUTE OF FLIGHT	TO	ETE
I					BFM V198 CEW		0+35
V					TALLAHASSEE	NIP	1+05

Figure 4-38 Composite Flight Plan #1

The pilot wishes to fly VFR to Crestview VORTAC (CEW) and fly the rest of the flight IFR:

TYPE FLT PLAN	TRUE AIRSPEED	POINT OF DEPARTURE	PROPOSED DEPARTURE TIME (Z)	ALTITUDE	ROUTE OF FLIGHT	TO	ETE
V					CEW		0+35
I					CORKY V198 MONIA MADEN	NIP	1+05

Figure 4-39 Composite Flight Plan #2

406. CHAPTER FOUR REVIEW QUESTIONS

1. You plan to arrive at your destination at 1600Z on a VFR flight plan. Your destination must be forecasting VFR weather during the period from _____ Z to _____ Z.

2. Based on the following information, could a VFR flight plan be filed to NAS Pensacola from NAS Jacksonville? _____

Ceiling	Visibility
NAS Jacksonville	1000 feet 3 miles (existing)
NAS Pensacola	2000 feet 2 miles (±1 hr. ETA)

3. An airplane operating outside of controlled airspace and below 1200 feet AGL must have _____ visibility and remain _____ in order to fly VFR.

An aircraft operating within controlled airspace above 10,000 feet MSL must have _____ visibility and remain _____ above, _____below, and _____ horizontal clearance in order to fly VFR.

4. The existing weather at your point of departure is 1000 foot ceiling and 3 miles visibility in rain showers. (No radar or ILS available.) May a standard instrument rated pilot take off on an instrument flight? _____

The existing weather at the point of departure is 200 foot ceiling and ¾ mile visibility. The duty runway has a PAR approach with weather minimums of 100 feet and ½ mile. May a standard instrument rated pilot take off? _____

5. The existing weather at your point of departure is 0 feet ceiling and ¼ mile visibility in fog. May a special instrument rated pilot take off under these conditions? _____

6. Navy/Marine Corps pilots must use the rules established in _____ vice FARs when selecting a suitable alternate.

7. Your destination is forecasting 400 feet broken and 3 miles visibility (. . . 4800 06HZ 6ST004. . . CIGNO). Are you required to have an alternate? _____

8. Can you file to a destination which is forecasted to be completely fogged-in with zero visibility at your arrival time? (Yes /No)

9. If a PAR is not available at your destination, then your lowest approach minima at the destination for determining alternate weather requirements will be based on a _____ approach.

10. IFR flight planning shall be based on the pilot's best judgment as to the runway that will be in use upon arrival. (True/False)

11. When determining **alternate** weather requirements, when will you NOT use PAR approach minimums? _____

12. **Normally**, a suitable alternate should have a published instrument approach the aircraft can execute in case of lost communications. (True/False)

13. A single-piloted aircraft may use destination radar (PAR/ASR) approach minimums to determine if the forecast weather at the destination (±1 hr. of your estimated arrival time) is below, equal to, or above approach minimums. (True/False)

14. If the destination weather is forecast to be below your lowest published approach minimums then _____.

a. the alternate forecast weather must be at or above nonprecision minimums plus 300–1

b. the alternate forecast weather must be at or above 3000–3

c. the alternate forecast weather must be at or above radar approach minimums plus 200–½

15. Your destination is NAS Pensacola and you are flying a single-piloted aircraft with NAVAID capability of VOR only. NAS Pensacola is forecasting 4 BKN 12 OVC 1R (. . . 1600 60RA 5ST004 8 SC012 . . . CIG004) and the following approaches and minimums are available.

PAR	100–¼
VOR	500–2
TACAN	300–1
ASR	300–1

Is Pensacola forecasting (above/below) your lowest approach minimums?

16. Referencing the above question is an alternate required? (Yes/No)

17. You are flying a single-piloted aircraft and your destination is forecasting above published minimums but below 3000–3. The alternate must be forecasting at least

a. PAR approach minimums plus 200–½.

b. Nonprecision approach minimums plus 300–1.

c. ASR approach minimums plus 300–1.

d. 3000-3.

18. The symbol NA indicates that the airport may be used as an alternate. (True/False)

19. Using the information provided below and GP Chapter 4, fill in the blank DD 175.

Aircraft:	T–34C BUNO 987654
Tail number:	5E212
Squadron/home station:	TW5, NAS Whiting Field (NSE)
Type of flight plan:	IFR
Electronic equipment:	VOR, TACAN, and transponder with Mode C
True airspeed:	200 knots
Estimated time of departure:	1300 local (Standard Time)
Cruise altitude:	8000
Point of departure:	Alexandria Intl. (AEX) (GMT–6)
Destination airport:	Ellington FLD. (EFD)
ETE to destination IAF:	1+23
Distance to destination IAF:	218 NM
Route of flight:	Direct to Alexandria VORTAC (AEX) V212, Lufkin VORTAC (LFK), V13, Humble VORTAC (IAH), Direct TAPOW (Initial Approach fix)
Alternate:	Lake Charles Regional (LCH)
ETE to alternate:	0+44 (including approach time)
Fuel on board:	3+00
Remarks:	Aircraft will remain overnight
Pilot's instrument rating:	Standard
Pilot's name:	Schleifer, J., Capt 454–69–3242 VT–3
Copilot's name:	Burgett, V., 1/LT 477–09–2231 CTW–5
Weight and balance:	N/A

AUTHORITY: 10 USC 8012 and EO 9397.
PRINCIPAL PURPOSE: To aid in accurate identification of personnel participating in the filed flight.

PRIVACY ACT STATEMENT
ROUTINE USES: To provide data required to process flight plans with appropriate air traffic service authorities. A file is retained by the agency processing the flight plan.
DISCLOSURE: Voluntary; however, failure to provide the SSN could result in denial of flight plan processing.

DATE	AIRCRAFT CALL SIGN	AIRCRAFT DESG AND TD CODE

BASE OPERATIONS USE

	TYPE FLT PLAN	TRUE AIRSPEED	POINT OF DEPARTURE	PROPOSED DEPARTURE TIME (Z)	ALTITUDE	ROUTE OF FLIGHT	TO	ETE

REMARKS

RANK AND HONOR CODE

FUEL ON BD	ALTN AIRFIELD	ETE TO ALTN	NOTAMS	WEATHER	WT AND BALANCE	AIRCRAFT SERIAL NUMBER, UNIT, AND HOME STATION

SIGNATURE OF APPROVAL AUTHORITY	CREW/PASSENGER LIST			ACTUAL DEP TIME (Z)	BASE OPERATIONS USE
		ATTACHED	SEE PSGR		

DUTY	NAME AND INITIALS	RANK	SSN	ORGANIZATION AND LOCATION
PILOT IN COMMAND				

DD Form 175, MAY 86 (EG) *Previous editions are obsolete.* **MILITARY FLIGHT PLAN**
Designed using Perform Pro, WHS/DIOR, Feb 96

Figure 4-40 DD Form 175

THIS PAGE INTENTIONALLY LEFT BLANK

407. CHAPTER FOUR REVIEW ANSWERS

1. 1500 – 1700Z

2. No. Visibility at NAS Pensacola is below 3 SM.

3. 1 SM; clear of clouds

   5 SM; 1000 feet above, 1000 feet below and 1 SM horizontal clearance

4. Yes; Yes

5. Yes; No takeoff mins. exist for a special-rated instrument pilot.

6. OPNAVINST 3710.7

7. Yes

8. Yes

9. Nonprecision

10. True

11. When flying a single-piloted aircraft, or an aircraft with only one operable UHF/VHF transceiver.

12. True

13. True

14. b.

15. above

16. Yes

17. b.

18. False

19. Refer to the DD Form 175 on the following page.

AUTHORITY: 10 USC 8012 and EO 9397.
PRINCIPAL PURPOSE: To aid in accurate identification of personnel participating in the filed flight.

PRIVACY ACT STATEMENT
ROUTINE USES: To provide data required to process flight plans with appropriate air traffic service authorities. A file is retained by the agency processing the flight plan.
DISCLOSURE: Voluntary; however, failure to provide the SSN could result in denial of flight plan processing.

DATE	AIRCRAFT CALL SIGN	AIRCRAFT DESG AND TD CODE
(Today)	VV5E212	T34 T/A

BASE OPERATIONS USE

	TYPE FLT PLAN	TRUE AIRSPEED	POINT OF DEPARTURE	PROPOSED DEPARTURE TIME (Z)	ALTITUDE	ROUTE OF FLIGHT	TO	ETE
	I	200	AEX	1900	80	AEX V212 LFK V13 IAH TAPOW	EFD	1+23

REMARKS
A/C will RON-EFD

RANK AND HONOR CODE
N/A

FUEL ON BD	ALTN AIRFIELD	ETE TO ALTN	NOTAMS	WEATHER	WT AND BALANCE	AIRCRAFT SERIAL NUMBER, UNIT, AND HOME STATION
3+00	LCH	0+44	✓	flimsy #	N/A	987654/TW5/NSE

SIGNATURE OF APPROVAL AUTHORITY
CREW/PASSENGER LIST: ATTACHED / SEE PSGR
ACTUAL DEP TIME (Z)
BASE OPERATIONS USE

DUTY	NAME AND INITIALS	RANK	SSN	ORGANIZATION AND LOCATION
PILOT IN COMMAND	Schleifer, J	CPT	—	VT-3/NSE
CP	Burgett, V	1/Lt	—	TW-5/NSE

DD Form 175, MAY 86 (EG) *Previous editions are obsolete.* MILITARY FLIGHT PLAN
Designed using Perform Pro, WHS/DIOR, Feb 96

Figure 4-41 DD Form 175 #19 Answers

THIS PAGE INTENTIONALLY LEFT BLANK

CHAPTER FIVE
CR-2 COMPUTER

500. INTRODUCTION

This chapter provides a review of the functions and use of the CR-2 Computer.

501. LESSON TOPIC LEARNING OBJECTIVES

TERMINAL OBJECTIVES

1. Demonstrate the ability to use selected functions of the CR-2 computer.

ENABLING OBJECTIVES

1. Determine specified data on the computation side of the CR-2 computer.

2. Determine specified data on the wind side of the CR-2 computer.

502. THE COMPUTATION SIDE OF THE CR-2 COMPUTER

Before discussing the required procedures for various calculations, one needs to understand this chapter is designed as a refresher course only. Based on the skills you learned during Aviation Indoctrination, these problems are simple in comparison. If you require more detailed information, refer to your AI pubs, CR-2 Instruction Manual, or consult an academic instructor.

Before attempting to solve the following problems, familiarize yourself with the makeup of the front side of the CR-2 computer. This computer is nothing more than a circular slide rule designed for aviation.

503. TIME, DISTANCE, SPEED PROBLEMS

You must learn to use the CR computer to rapidly and accurately solve problems associated with time, distance, and speed.

When working with time, distance, and speed information, by knowing any two of these you can find the third by using the index. The index represents 60 minutes (on the inner scale); thus, you could say that the index is used as a basis for what is happening per hour. Match any distance with the corresponding time (for a portion of your flight) and every other time and distance will match correctly around the dial.

A time, distance, and speed problem is set up using the following ratio:

rate per hour		distance
▲ (index)	or	time

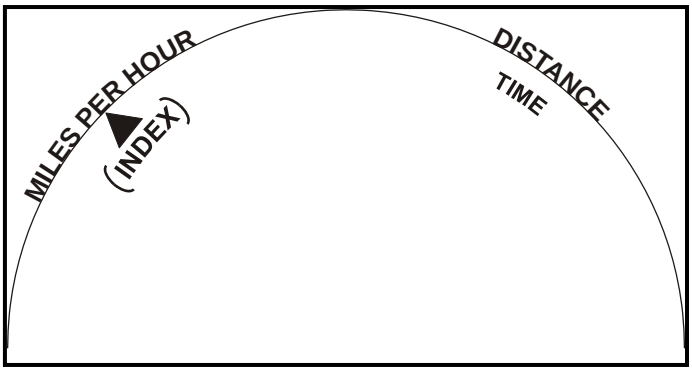

Figure 5-1 Time, Distance, and Speed

TO FIND **SPEED**, SET UP THE TIME, DISTANCE, SPEED RATIO:

EXAMPLE

Given: Distance = 40 NM
Time = 12 min.

Find: Ground speed

PROCEDURES

1. Set distance over time

2. Read speed over ▲ (index)

Answer: Ground speed = 200 knots

PRACTICE

Solve the following problems for ground speed:

	DIST (NM)	HR + MIN	GS (KNOTS)
1.	65	0 + 26	_____
2.	390	1 + 50	_____
3.	250	1 + 17	_____
4.	380	1 + 20	_____
5.	190	1 + 31	_____

Answers

1. 150 knots 2. 213 knots 3. 195 knots 4. 284 knots 5. 125 knots

5-2 CR-2 COMPUTER

TO FIND **TIME**, SET UP THE RATIO AS BEFORE:

rate per hour		distance
▲ (index)	or	time

Example:

Given: Ground speed = 63 knots
Distance = 40 NM.

Find: Time

PROCEDURES

1. Set speed over ▲ (index)
2. Read time under distance

Answer: Time = 0 + 38 minutes.

PRACTICE

Solve the following problems for time.

	GS (KTS)	DIST	TIME
1.	465	140 NM	_____
2.	153	290 NM	_____
3.	215	585 NM	_____
4.	304	208 NM	_____
5.	117	70 NM	_____

Answers
1. 0 + 18 2. 1 + 54 3. 2 + 43 4. 0 + 41 5. 0 + 36

TO FIND **DISTANCE**, AGAIN GO BACK TO THE RATIO:

rate per hour		distance
▲ (index)	or	time

EXAMPLE:

Given: Ground speed = 120 knots
Time = 7 min.

Find: Distance

PROCEDURES:

1. Set speed over ▲ (index)

2. Read distance over time

Answer: Distance = 14 NM.

PRACTICE

Solve the following problems for distance:

	GS (KTS)	TIME	DIST
1.	137	0 + 53	_____
2.	346	2 + 24	_____
3.	97	1 + 08	_____
4.	1025	0 + 32	_____
5.	191	1 + 46	_____

Answers

1. 121 NM 2. 831 NM 3. 110 NM 4. 546 NM 5. 337 NM

504. SOLUTION OF TIME IN MINUTES AND SECONDS

The smaller index mark at 36 (on the inner scale) is called the seconds index due to the fact that one hour is equivalent to 3,600 seconds. When this index is placed opposite a speed on the outer scale, a distance read on the outer scale will relate to a corresponding time in seconds on the inner scale. For example, if the seconds index (36) is placed under a ground speed of 144 knots, 50 seconds are required to go 2.0 NM, and in 150 seconds 6.0 NM will be traveled.

505. FUEL CONSUMPTION PROBLEMS

Problems dealing with fuel consumption are worked in the same manner as time-distance problems. However, while time is still on the inner scale, fuel (consumed and consumption rate) is on the outer scale.

EXAMPLE

Given: Fuel consumption . . . . . 11 gal. per hour
Time flown . . . . . .4 + 30

Find: Fuel consumed

PROCEDURES

1. Set fuel consumption over ▲ (index).

2. Read fuel consumed over time.

Answer: Fuel consumed = 49.5 gallons rounded up to 50 gallons.

PRACTICE

	RATE PER HOUR	TIME	QUANTITY
1.	38 gal.	1 + 30	_____ gal.
2.	115 lbs.	+ 50	_____ lbs.
3.	_____	3 + 45	432 gal.
4.	245 lbs.	_____	1225 lbs.
5.	750 lbs.	11 + 00	_____ lbs.

Answers

1. 57 2. 96 3. 115. 4. 5 + 00 5. 8250

506. AIRSPEED CONVERSIONS

By correcting calibrated airspeed for temperature and pressure altitude, TRUE AIRSPEED can be calculated. True airspeed calculations are also affected by a number of other variables. However, adequate accuracy can be obtained by simply correcting for temperature and pressure altitude. These corrections must be applied, as aircraft seldom fly at sea level on a standard day.

Prior to working the example problem, review the following facts:

1. CAS scale is numbered from 80 to 1000 knots.

2. Pressure altitude is numbered from 0 to 80,000 feet.

3. Temperature section indicates from -80º C. to +120 C.

4. TAS is numbered from 100 to 1000.

5. The temp bar rises as you rotate the top disc to the right.

EXAMPLE:

Given: Calibrated airspeed = 250 knots
Pressure altitude = 12,500 feet
Indicated air temperature = -20º C.

Find: True airspeed

PROCEDURES:

1. Set CAS over PA (Pressure Altitude)

2. Align cursor to intersect temperature at temperature bar.

3. Follow down the cursor and read **TAS**.

Answer: TAS = 288 KNOTS

PRACTICE

Solve the following problems for TAS:

	CALIBRATED AIRSPEED	PRESSURE ALTITUDE	CALIBRATED AIR TEMPERATURE	TRUE AIRSPEED
1.	180 knots	5000 feet	-10º C.	_____ knots
2.	260 knots	10,000 feet	- 5º C.	_____ knots
3.	150 knots	20,000 feet	-25º C.	_____ knots
4.	190 knots	8500 feet	+ 5º C.	_____ knots

Answers

1. 187 2. 295 3. 202 4. 216

507. THE WIND SIDE OF THE CR-2 COMPUTER

Ground speed computation is basic to flying. Being able to compute accurate ground speed is important when determining times and fuel requirements. The variables to be considered during preflight planning that affect ground speed are TAS, Wind, Crab Angle, and True Course. For the purposes of this course we will only concern ourselves with TAS and WIND.

As you work through a problem, make sure you keep the following in mind:

1. Winds obtained during a weather brief or from a winds-aloft chart are given in degrees True. Only the winds given by Approach/Departure Control or a tower are magnetic.

2. As the winds are True, the desired course to be flown must also be True. A Magnetic course is converted to a True course by accounting for Magnetic Variation (MAG VAR). This conversion is easily made with the CR-2.

NOTE

You will be converting MAG course to True course solely for use on the wind side of the CR-2 in determining ground speed.

3. Ground Speed is computed with the CR-2 by adding or subtracting a wind component to or from the aircraft's TAS.

Prior to using the CR-2, make sure you are familiar with its makeup. If you require more detailed information, refer to your AI pubs, CR-2 Instruction Manual, or consult your RI academic instructor.

Use your CR-2 and work through the following examples:

Given: TAS = 140 knots

Wind = 220º at 35 knots

MAG Course = 085º

Find: Ground Speed

1. Find 220º (wind direction) on degree scale.

2. Plot the wind dot at 35 (wind speed).

3. Place MAG Course of 085º over the TC index.

4. Determine whether a head, tail or no-wind condition exists.

5. Read up from the wind dot to the right crosswind scale to determine crosswind component (25 knots).

6. Add 25 knots (tailwind component) to 140 knots (TAS) to determine the ground speed.

Answer: Ground Speed = 165 knots

NOTE

The headwind/tailwind and left/right crosswind scales CAN be assigned incremental value other than those printed on the CR-2.

However, the values assigned must remain the same throughout the problem.

For example, a line must represent 2, 4, 5 KTS, etc. But then **all** the lines must represent that value during the entire process.

PRACTICE

	TAS	WIND(T)	COURSE(MAG)	GS
1.	150 KTS	120º /20	340º	_____
2.	165 KTS	180º /10	246º	_____
3.	96 KTS	090º/15	360º	_____
4.	116 KTS	050º/35	212º	_____
5.	204 KTS	040º/40	131º	_____

Answers

1. 165 KTS

2. 161 KTS

3. 96 KTS

4. 148 KTS

5. 204 KTS

PRACTICE PROBLEMS

1. Find Time, Speed, or Distance.

	TIME	SPEED	DISTANCE		TIME	SPEED	DISTANCE
a.	1+40		410	j.		145	126
b.	6+20		1645	k.	1+17	160	
c.		182	225	l.		154	196
d.	3+19	228		m.	+33		78
e.		294	502	n.	+19	139	
f.	4+35	456		o.	60 sec	198	
g.	5+33		400	p.	45 sec	155	
h.		124	612	q.		172	4.3
i.	5+40		1480	r.	80 sec		5.05
				s.		236	6.9

2. Find Time, Consumption Rate, or Fuel Command.

	TIME	CONSUMPTION RATE (GPH)	FUEL CONSUMED (GALS)		TIME	CONSUMPTION RATE (GPH)	FUEL CONSUMED (GALS)
a.	3+24	28		l.		150	293
b.	1+46		390	m.	+32		124
c.	7+40	186		n.		90	610
d.		43	73	o.	10+00	444	
e.	2+17	31		p.	4+20		1390
f.	1+25		225	q.		410	1540
g.		290	1410	r.	1+15	1200	
h.		190	1500	s.	6+00		780
i.	2+40	225		t.	2+10	142	
j.	+42		104	u.	3+15		390
k.	1+50	90		v.		200	284

3. Find TAS.

	PRESS ALT	IND TEMP	CAS	TAS
a.	3000	0	140	_____KTS
b.	8000	-5	160	_____KTS
c.	12,000	-10	190	_____KTS
d.	10,000	0	200	_____KTS
e.	3000	0	180	_____KTS

4. Find Ground Speed.

	TAS	WIND(T)	COURSE (MAG)	GS
a.	300	040º/60 KTS	345º	_____KTS
b.	150	240º/20 KTS	131º	_____KTS
c.	89	350º/10 KTS	090º	_____KTS
d.	133	120º/40 KTS	155º	_____KTS
e.	200	180º/25 KTS	065º	_____KTS

PRACTICE PROBLEM ANSWERS

1.

a. 246
b. 260
c. 1+14
d. 759
e. 1+43
f. 2097
g. 72
h. 4+56
i. 261
j. 52
k. 205
l. 1+16
m. 142
n. 44
o. 3.3
p. 1.94
q. 90
r. 226
s. 105

2.

a. 95
b. 220
c. 1428
d. 1+42
e. 71
f. 159
g. 4+52
h. 7+53
i. 600
j. 149
k. 165
l. 1+57
m. 232
n. 6+46
o. 4,440
p. 320
q. 3+45
r. 1500
s. 130
t. 307
u. 120
v. 1+25

3.

a. 143
b. 177
c. 224
d. 231
e. 184

4.

a. 265
b. 157
c. 91
d. 101
e. 212

508. CHAPTER FIVE REVIEW QUESTIONS

1. Your ground speed is 150 knots. In 2 hours and 20 minutes you will fly a distance of _____ NM.

2. How much flight time is available when your fuel supply is 154 gallons and the rate of consumption is 55 gallons per hour? _____ hours _____ minutes

3. On your chart, the distance from "A" to "B" measures 243 NM. You flew this distance in an elapsed time of 1 hour and 23 minutes. Your ground speed was _____ knots.

4. On your chart, the distance from your departure point to your destination measures 278 NM. At a ground speed of 153 knots, your estimated time enroute would be _____ hours, _____ minutes.

5. At 1035Z, your fuel remaining was 300 pounds. Your rate of consumption is 120 pounds per hour. You will be able to remain airborne for _____ hours and _____ minutes.

6. During preflight, the forecaster gives you winds of 190º/25 knots. You plan to fly a TAS of 170 knots on a MAG course of 126º with a MAG VAR of 2º W. Your ground speed will be _____ knots.

7. You are making an instrument approach. The distance from the radio facility to the airport is 4.3 NM. At an approach speed of 105 knots, you will reach the airport in _____ minutes and _____ seconds.

8. A ground speed check on your TACAN indicates you flew 7 NM in 2 minutes and 40 seconds. Your ground speed was _____ knots. At this rate, in a flight of 2 hours and 40 minutes, you would fly a distance of _____ NM.

9. During a flight, a pilot noticed a prominent landmark and found that he was 35 NM from his point of departure. The flight began at 1620Z and this landmark was passed at 1630Z. The ground speed made good was _____miles.

10. You departed your base at 0800 and arrived at your destination at 1020. The measured distance on the chart was 340 NM. If the total fuel used was 640 pounds, your rate of consumption was _____ pounds per hour.

11. You depart your base at 1330 and arrived at your destination at 1615 with 110 gallons fuel remaining. The distance flown was 450 NM. If the total fuel capacity of your aircraft is 300 gallons, your fuel consumption on the flight was _____ gallons per hour. At this fuel consumption rate, the maximum range of your aircraft is _____ NM.

509. CHAPTER FIVE REVIEW ANSWERS

1. 350
2. 2+48
3. 176
4. 1+49
5. 2+30
6. 159
7. 2; 27
8. 157; 419
9. 210
10. 274
11. 69; 710

CHAPTER SIX
FLIGHT PLANNING RULES (FLIGHT LOG)

600. INTRODUCTION

This chapter introduces the student to the process and rules to be used while filling out the "Single-Engine Jet Flight Log," commonly referred to as a jet log or flight log. The process will be demonstrated in the classroom while working the "Lecture Problem."

Step 1: READ ALL THE INFORMATION PROVIDED IN THE FLIGHT PLANNING PROBLEM.

Step 2: EXAMINE DEPARTURE WEATHER AND DETERMINE IF TAKEOFF MINIMUMS ARE MET (OPNAV 3710.7 paragraph 5.3.3.1) BY:

NOTE

Actual T/O minimums will be determined using current observation of the time of T/O clearance.

1. Selecting the lowest published minimums for an approach you can shoot, and;

2. Comparing with the following:

   a. Standard Instrument Rated Pilot

   b. Precision - 200-½ but not less than published mins.

   c. Nonprecision - 300-1 but not less than published mins.

While looking up these minimums, copy the appropriate frequencies into the top line of your flight log.

Step 3: EXAMINE DESTINATION WEATHER AND DETERMINE IF AN ALTERNATE AIRFIELD IS REQUIRED (OPNAV 3710.7, Figure 4-1). Additionally, read any special instructions that may be contained in the DOD FLIP.

While looking up these minimums copy appropriate frequencies onto your Flight Log.

Step 4: SELECT AN ALTERNATE (IF REQUIRED) USING THE FOLLOWING CONSIDERATIONS:

1. Terminal Forecast

2. NAVAID Compatibility

3. NOTAMs

4. Approach Plate Remarks (i.e., symbol NA and Symbology)

5. Copy frequencies and information on to Flight Log.

Step 5: COMPUTE CLIMB TAS USING CR-2, 3, 4, OR 5.

1. Compute average altitude for climb.

2. Departure elevation plus cruise altitude divided by two.

3. Round to nearest 500' using normal rounding procedures.

$$\frac{\text{DEP FIELD ELEV} + \text{CRUISE}}{2}$$

4. Use CR-2/3/5 to compute TAS for the climb.

Rounding procedures: Round miles and minutes off to the nearest whole number for each calculation (.5 or greater rounds up). Round fuel quantities up. Any fraction over a pound, round up to the next pound. Example: 145.2 lbs rounds up to 146 pounds.

Step 6: COMPUTE CRUISE TRUE AIRSPEED (TAS) USING CR-2, 3, 4, OR 5.

Step 7: COMPUTE TIME TO CLIMB.

1. Subtract starting altitude from cruise altitude.

2. Round to nearest 100 feet and divide by rate of climb.

3. Round time to nearest whole minute.

Step 8: DETERMINE YOUR CLIMB AND CRUISE FUEL FLOW USING THE FUEL FLOW CHART (Figure 24-17) IN YOUR NATOPS MANUAL.

NOTE

For problems and test, this calculation has been done for you.

Step 9: REVIEW ROUTE OF FLIGHT AND RECORD EACH LEG ON FLIGHT LOG.

1. Rules for leg entries on the Flight Log:

   a. NAVAID to NAVAID, on and off airways;

   b. Course changes of 6º or more on Victor Airways;

   c. Both ends of a direct route - anytime aircraft is not on an airway;

d. Any mandatory reporting point.

2. Fill in the NAVAID, frequency, magnetic course, and distance:

a. Magnetic course and distance from the departure airfield to the first fix (INTERSECTION OR NAVAID) on an airway **may** be found in 1) the Enroute Supplement in the NAVAIDs section of some airports; **or**, 2) on appropriate Approach Plates as Enroute/Feeder Fixes. In the absence of these two sources, 3) measure the distances directly off the Low Altitude Charts and compare to mileage scale, and use a nearby compass rose on the chart to measure the course.

b. To determine magnetic course and distance on a direct leg:

3. Measure courses and distances directly off the charts. Use the compass rose for course and mileage scale for distance.

Step 10: DETERMINE COMPULSORY REPORTING POINTS FOR NONRADAR ENVIRONMENT AND MARK ACCORDINGLY; e.g., FIXES ARE COMPULSORY REPORTING POINTS UNDER THE FOLLOWING CIRCUMSTANCES:

1. Both ends of a direct route

2. Solid Triangle at a Fix

Step 11: COMPUTE GROUND SPEED (GS) USING WIND SIDE OF CR-2, 3, 4, OR 5.

1. Using computed GS for the climb, compute the time to first fix.

2. Three possibilities concerning your point of level-off exist: Fill in the blanks below during the class lecture problem.

a. Crossing the fix at the same point and time as reaching cruise; altitude.

b. Reaching cruise altitude prior to the fix;

c. Reaching cruise altitude after crossing the first fix

3. In most practice problems, 2c is the case. This is referred to as a split leg; part of a leg is climb and part is cruising. Fuel flow, air speed, ground speed, distance, and time for climb and cruise must be computed for this leg.

Step 12: COMPUTE ETE AND LEG FUEL FOR EACH LEG USING THE COMPUTATION SIDE OF THE CR-2, 3, 4, OR 5.

Step 13: CALCULATE EFR FOR EACH LEG AND COMPUTE TOTAL DISTANCE, ETE AND FUEL FOR DEST AND ALT.

Step 14: COMPLETE "ALTERNATE, ROUTE, ALT, TIME, AND FUEL" LINE OF THE FLIGHT LOG.

Step 15: COMPLETE T-34C FUEL PLAN USING FLIGHT LOG INFORMATION.

Step 16: COMPLETE DD-175 FOR THE FLIGHT

601. LECTURE PROBLEM

DIRECTIONS:

1. Read the problem.

2. Complete the flight log and DD 175.

Unit of Assignment:	CTW 5/NAS Whiting Field
Aircraft/BUNO/Radio Call:	T-34C/137773/6E432
Aircraft Nav Equipment:	VOR and TACAN
Transponder:	4096 Codes with Mode C
Type of Flight:	IFR

	Airport	**Forecast Weather ± 1 hr.**
Departure:	Meridian NAS, MS	19005KT 0800 FG OVC004 QNH29.92INS
Destination:	Mobile Regional, AL	09015KT 4800 HZ BKN020 QNH30.01INS
Alternate:		
	Crestview/Bob Sikes, FL	17010KT 3200 HZ OVC007 QNH29.99INS
	Pensacola NAS	18005KT 1600 BR OVC010 QNH30.00INS
	Whiting Field NAS-North FL	23020KT 3200 HZ BKN008 QNH29.98INS

Plan to depart NAS Meridian on RWY 19L at 0800 local standard time via radar departure to Meridian VORTAC, V543 to Eaton VORTAC, V114 to Gulfport VORTAC, V20 to Semmes VORTAC (IAF) for a TACAN A approach to RWY 14.

Alternate Airports	**Route of flight**
Crestview/Bob Sikes:	V241 to Crestview VORTAC (IAF) for a VOR-A approach to RWY 17.
Pensacola NAS:	V241 to Bratt Int., direct to Saufley VOR (IAF) for a VOR RWY 19 to RWY 19.
Whiting Field NAS:	V241 to Pensi Int., direct to TROJN (IAF) for a TACAN RWY 23 approach to RWY 23.

Climb Data		**Cruise Data**	
Airspeed:	120 KCAS	Altitude:	16,000 feet
Rate of climb:	1500 FPM	Airspeed:	170 KCAS
Wind/temp:	030º/10 knots 0º C.	Wind/temp:	130º/20 knots -15ºC
Fuel flow:	300 lbs/hr.	Fuel flow:	250 lbs/hr.

Fuel Data

Fuel on board:	815 lbs.
Hours fuel on board:	3+00
Taxi and turnup:	30 lbs.
Fuel for each approach:	30 lbs.
Endurance fuel flow:	168 lbs/hr.

Additional Data

Pilot's Instrument Rating:	Standard
Alternate approach time:	0+10
Magnetic variation:	10º W (exaggerated for demonstration purposes)

THIS PAGE INTENTIONALLY LEFT BLANK

CHAPTER SEVEN
HOLDING

700. INTRODUCTION

This chapter provides a basic introduction to Holding covering ATC holding clearances, holding concepts, and basic holding pattern orientation relative to holding fixes and approach patterns. Specific flight procedures are covered in the RI Flight Procedures lecture following this course.

701. LESSON TOPIC LEARNING OBJECTIVES

TERMINAL OBJECTIVE

1. Understand and recall the uses and aspects of holding patterns.

ENABLING OBJECTIVES

1. Translate ATC holding clearances to establish the holding pattern at named fixes.

    a. Standard holding pattern.

    b. Nonstandard holding pattern.

    c. TACAN holding patterns.

2. State holding pattern timing according to flight altitude.

    a. At or below 14,000 feet MSL.

    b. Above 14,000 feet MSL.

3. State maximum holding pattern airspeeds.

702. HOLDING PROCEDURES

In this section, procedures will be discussed for two eventualities that may occur while an aircraft is enroute to a destination. First, a holding clearance may be issued; secondly, you may lose radio communications. An aviator must be able to understand and respond correctly to either situation. Holding clearances may be issued by ATC to ensure IFR traffic separation criteria or sequence approaches due to a backup of arriving aircraft at a particular airport.

During this discussion, the student should use the plastic RMI device (no. 2B25) frequently to "visualize" the correct manner to comply with a holding clearance. Holding is the maneuvering of an aircraft within a specified airspace with respect to a particular fix. An aircraft will hold at a navigational fix. This fix can be a VOR, NDB, an intersection, or a TACAN radial/DME fix.

There are two instances when an aircraft must hold. The first is when instructed by the controller. The second is upon reaching a clearance limit. A clearance limit cannot be exceeded without further clearance. Therefore, holding is mandatory until further clearance is obtained. An example of the second situation might be: You are approaching your clearance limit with two-way communication. The controller is handling an emergency and is unable to give you further clearance before you arrive at the clearance limit.

A holding clearance will always contain an expected further clearance time (EFC). EFC times apply to aircraft regardless of the phase of flight. In the terminal environment, holding may also be utilized to descend an aircraft to an appropriate altitude from which an approach may be commenced. This is referred to as a shuttle descent.

The standard no-wind holding pattern is flown by following a specified holding course inbound to the holding fix, making a standard rate (3° per second) 180° turn to the right, flying a heading outbound to parallel the holding course, and making another 180° standard rate turn to the right to intercept and follow the holding course to the fix. The holding pattern is nonstandard when the turns are made to the left. Unless otherwise instructed by ATC, pilots are expected to hold in a standard pattern (Figure 7-1).

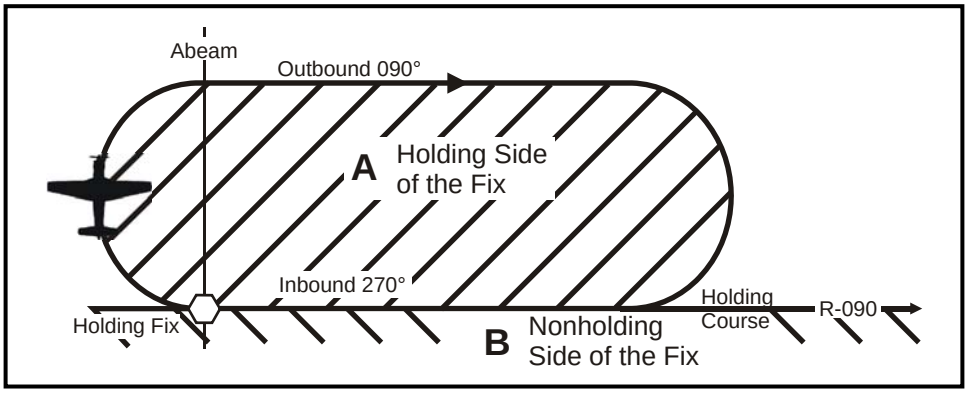

Figure 7-1 Holding Side of the Fix

NOTE

You always hold inbound to the Fix identified in the holding clearance.

The standard no-wind length of the legs of the holding pattern (except TACAN holding) is one minute at or below 14,000 feet and 1½ minutes above 14,000 feet. The length of the legs while using TACAN is specified in NM.

The inbound holding course is the course to the holding fix, while in the holding pattern. The outbound heading is the reciprocal of the inbound holding course. It should be noted that the holding side is the side of the holding pattern on which the turns are made.

ATC should issue holding instructions to you at least five minutes before you reach a clearance limit fix. If instructions are not received within three minutes of reaching the fix, reduce airspeed so as to cross the fix at or below the maximum holding airspeed. If holding instructions have not been received upon arrival at an enroute fix, hold in accordance with the depicted holding pattern. In the absence of a depicted pattern, hold in a standard pattern inbound to the fix on the course the aircraft approached the enroute fix.

In the terminal phase, if it is necessary to hold at the initial approach fix and no holding pattern is depicted on the appropriate approach plate, holding will be accomplished in a holding pattern on the final approach course inbound to the initial approach fix (IAF) making turns **on the procedure turn side** (Figures 7-2 and 7-3).

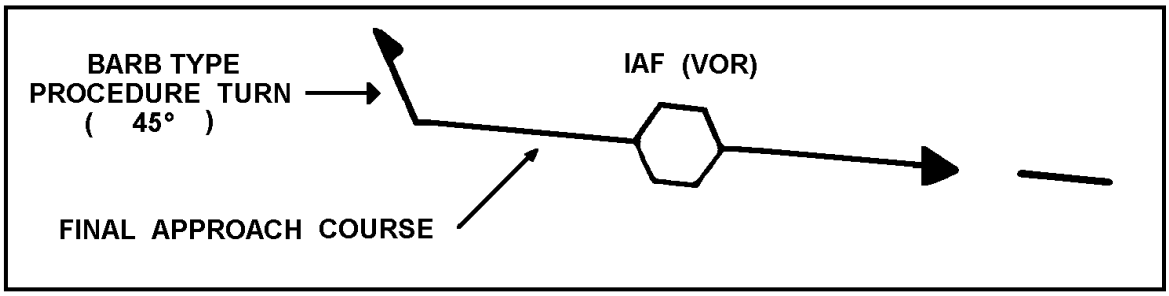

Figure 7-2 Making Turns on the Procedural Side #1

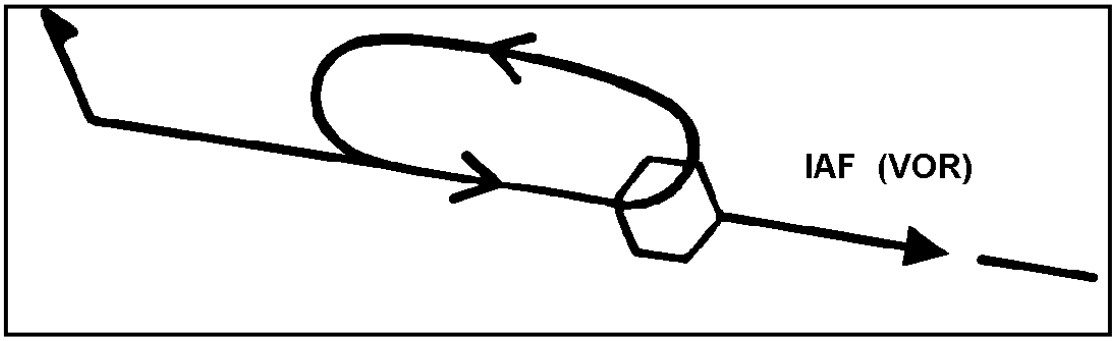

Figure 7-3 Making Turns on the Procedural Side #2

When you are given instructions for holding, the controller will designate:

1. The direction of holding from the fix
2. The holding fix
3. The radial, bearing, or airway on which the aircraft is to hold
4. Direction of turns (if nonstandard)

5. The assigned altitude (not required, if remaining the same)

6. The expected further clearance time.

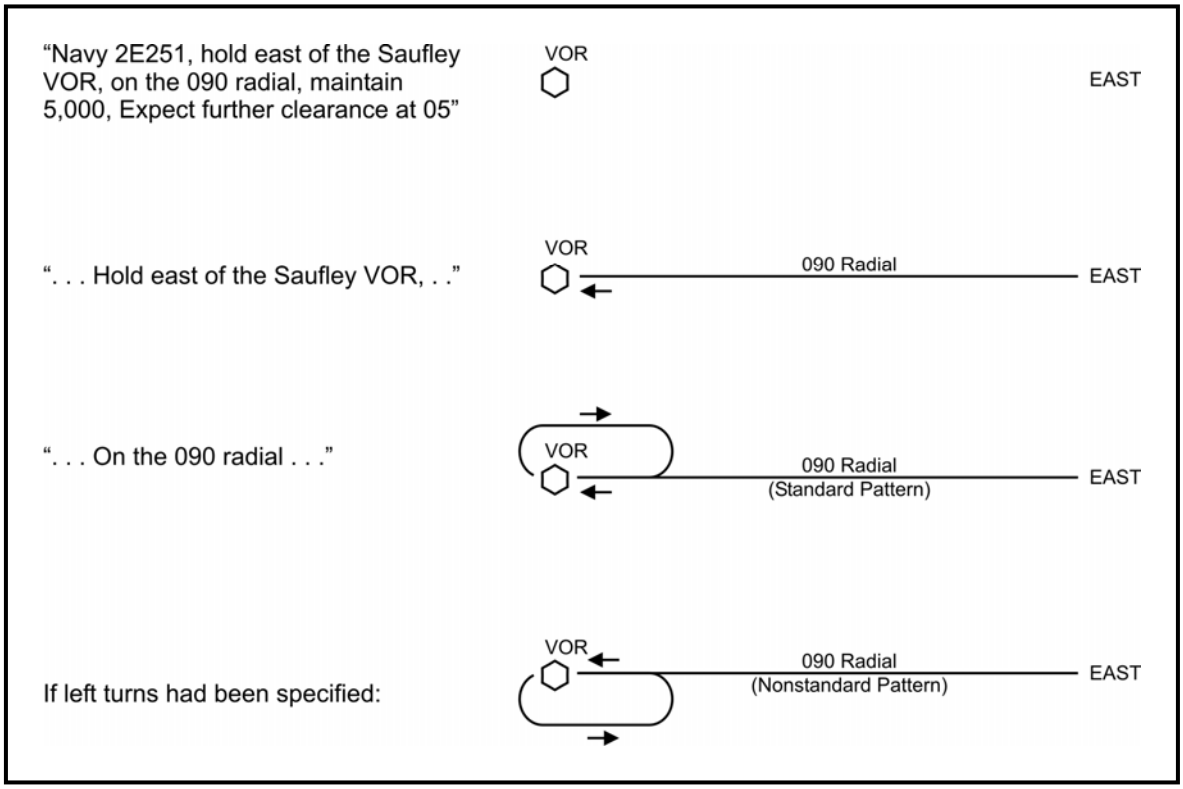

Figure 7-4 VOR - Holding

A TACAN holding fix is defined by a radial and distance. The holding pattern is not overhead of the NAVAID as with VOR holding patterns. Figure 7-5 illustrates a typical TACAN holding clearance.

"...hold west of the 20 DME fix on the 090 radial of the Jax VORTAC, 5 mile legs . . ."

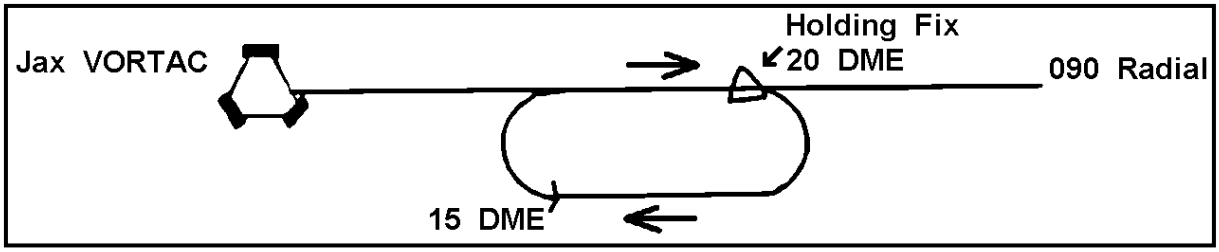

Figure 7-5 Hold West of the 20 DME Fix

1. AIRSPEED. Pilots will not exceed the following maximum airspeeds while in the holding pattern unless depicted otherwise. If the situation requires an airspeed greater than the maximum allowed for holding, notify ATC so that appropriated separation may be applied.

All aircraft

0 – 6000 feet MSL	200 KIAS
Above 6000 – 14,000 feet MSL	230 KIAS
Above 14,000 feet MSL	265 KIAS

Exceptions:

a. Holding patterns at USAF airfields only – 310 KIAS maximum unless otherwise depicted.

b. Holding patterns at Navy airfields only – 230 KIAS maximum all altitudes unless otherwise depicted.

2. HOLDING (FEDERAL AVIATION ADMINISTRATION)

a. Whenever an aircraft is cleared to a fix other than the destination airport and delay is expected, it is the responsibility of the ATC controller to issue complete holding instruction (unless the pattern is charted), an Expect Further Clearance time and the best estimate of any additional enroute/terminal delay.

b. If the holding pattern is charted and the controller does not issue complete holding instructions, the pilot is expected to hold as depicted on the appropriate chart. Holding instructions that contain **only** the holding direction (i.e., "Hold East") inform pilots that the pattern is charted.

A voice report is mandatory upon arriving at and departing from a holding fix. Voice reports will be made to the appropriate controlling agency.

ARRIVAL EXAMPLE: "Jacksonville Center, Navy 2E251, Saufley, 05, five thousand"

DEPARTING EXAMPLE: "Jacksonville Center, Navy 2E251, departing Saufley"

THIS PAGE INTENTIONALLY LEFT BLANK

CHAPTER EIGHT
INTRODUCTION TO GROUND, AIRBORNE, LOST COMMUNICATION, AND EMERGENCY VOICE PROCEDURES

800. INTRODUCTION

This chapter provides a review of basic radio communication phraseology and procedures. A description of the various ATC agencies you will be communicating with and the format and procedures for the required voice reports in VFR and IFR environments are provided.

801. LESSON TOPIC LEARNING OBJECTIVES

TERMINAL OBJECTIVE

1. Recall the functions of ATC, and the procedures for requesting an IFR clearance. Recall ATC's process of granting IFR clearances, the phraseology and format for voice procedures, lost communications procedures, and an understanding of holding procedures.

ENABLING OBJECTIVES

1. Recall the functions of Departure Control, Air Route Traffic Control, and Approach Control.

2. Recall how an IFR clearance is requested from ATC by the pilot.

3. Recall the steps required by ATC to process an IFR flight request, and who relays this clearance to the pilot.

4. List the mandatory items contained in the basic IFR clearance, and specific voice reports used in receiving the clearance.

5. Recall who issues detailed departure clearances, and the specific items contained in a departure clearance.

6. Recall the procedures required when issued a short range clearance.

7. Name the two methods that Departure Control may use to establish an aircraft in the enroute phase of the flight.

8. Name the method a pilot may use to establish himself/herself in the enroute phase of the flight.

9. Recall when an approach clearance is issued and by which agency.

10. Apply the correct format and spoken phraseology for voice reports.

11. Recall the correct voice call for ground stations.

12. Select the correct termination word for voice reports.

13. Define a discrete frequency.

14. State "handoff" procedures.

15. List the voice reports required by ATC in a nonradar environment.

16. List the voice reports required by ATC in a radar environment.

17. List the additional voice reports required by ATC.

18. State ATIS procedures.

19. Using the correct message format and phraseology, write voice reports for the following:

    a. "OFF" report.

    b. Initial contact reports – nonradar environment.

        i. When at a NAVAID.

            (a). Position report required.

            (b). Position report not required.

        ii. When required at a time or altitude.

    c Initial contact reports – radar environment.

    d. Position reports.

    e. Entering holding reports.

    f. Leaving holding reports.

    g. Leaving altitude reports.

    h Mandatory reports during an approach (nonradar).

        i. Leaving altitude.

        ii. Final approach fix.

8-2 INTRODUCTION TO GROUND, AIRBORNE, LOST COMMUNICATION, AND EMERGENCY VOICE PROCEDURES

iii. Missed approach.

20. Recall the procedure to be followed if operating in VMC conditions when a communications failure occurs while on an IFR clearance.

21. Recall the procedure ATC expects you to follow if operating in IFR conditions when the communications failure occurs.

a. Route to be flown.

b. Altitude to be maintained.

c. Enroute holding and clearance limit procedure.

d. Terminal holding procedures.

e. Descent for approach procedures.

f. Special military procedures.

22. Recall procedures to follow if the communications failure occurs while being radar vectored.

23. Recall lost communications transponder procedures.

802. RADIO COMMUNICATION PHRASEOLOGY AND TECHNIQUES

Radio communications are a critical link in the ATC system. Aviators must have a sense of whom they are communicating with, what information is required by particular controllers, and how best to convey intentions and/or requests. This lesson topic provides an introduction to ATC facilities and the procedures used to communicate with them.

References

1. Flight Information Handbook

2. IFR Enroute Supplement United States

3. GP

To fly safely in the IFR environment, knowledge of standard radio phraseology, voice report formats, and an understanding of lost communications and holding procedures is essential.

The single most important consideration in pilot-controller communications is understanding. Brevity is important and contacts should be kept as brief as possible, but the controller must know what you want to do before he can properly carry out his control duties and you, the pilot,

must know exactly what he wants you to do. Specific phraseology has been established for routine messages between controllers and pilots to standardize, expedite, simplify, and promote understanding. However, concise phraseology may not always be adequate. Use whatever words are necessary to get your message across.

Spoken Phraseology

1. Numbers are standard except the digits 0 and 9.

   0 is spoken - ZERO and
   9 is spoken - NINER (to lessen the confusion between nine and five)

2. Numbers indicating hundreds and thousands in round numbers (ceiling heights and upper wind levels) up to 9900 are spoken as:

   500 --- FIVE HUNDRED
   4500 --- FOUR THOUSAND FIVE HUNDRED
   9900 --- NINER THOUSAND NINER HUNDRED

Numbers above 9900 shall be spoken by separating the digits preceding the word "thousand." Example:

   10,000 --- ONE ZERO THOUSAND
   13,500 --- ONE THREE THOUSAND FIVE HUNDRED

3. Altitudes up to but not including 18,000 feet MSL are spoken by stating the separate digits of the thousands plus the hundreds.

Examples:

   12,000 --- ONE TWO THOUSAND
   14,500 --- ONE FOUR THOUSAND FIVE HUNDRED

   Altitudes at and above 18,000 feet MSL (FL 180) are spoken by stating the words "flight level" followed by the first three digits of the altitude. Example:

   FL 190 (ALT. 19,000) --- FLIGHT LEVEL ONE NINER ZERO

4. Airway or jet route numbers are spoken:

   V12 --- VICTOR TWELVE
   V99 --- VICTOR NINETY- NINE
   V455 -- VICTOR FOUR FIFTY-FIVE
   J533 --- JET FIVE THIRTY-THREE

5. All other numbers are transmitted by pronouncing each digit.

8-4 INTRODUCTION TO GROUND, AIRBORNE, LOST COMMUNICATION, AND EMERGENCY VOICE PROCEDURES

Examples:

10 --- ONE ZERO
106 --- ONE ZERO SIX

6. When a radio frequency contains a decimal point, the decimal point is spoken as "point."

Example:

Frequency 255.4 --- TWO FIVE FIVE POINT FOUR

7. The 24-hour clock system is used when transmitting time. The hour is indicated by the first two figures and the minutes by the last two figures. Example:

0920 --- ZERO NINER TWO ZERO
1530 --- ONE FIVE THREE ZERO

Time may be stated in minutes only (two figures) when no misunderstanding as to the hour is likely to occur.

8. The directions of bearing, radial, course, or heading are spoken in three digits and should always be magnetic. The word "true" must be added when it applies. Examples:

(magnetic course)	005 --- COURSE ZERO ZERO FIVE
(true heading)	050 --- HEADING ZERO FIVE ZERO TRUE
(radial)	195 --- ONE NINER FIVE RADIAL

NOTE

Degrees is not included

9. Speeds are stated in separate digits followed by the word "knots." (The controller may omit the word "knots" when using speed adjustment procedures, "Reduce/increase speed to ONE FIVE ZERO.")

Example:

250 --- TWO FIVE ZERO KNOTS

10. The phonetic alphabet (listed in Section A of the IFR Supplement) should be used by pilots when identifying their aircraft during initial contact with ATC facilities. Additionally, use the phonetic equivalents for single letters and to spell out groups of letters or difficult words during adverse communications conditions. Example:

FIVE --- FOXTROT INDIA VICTOR ECHO

11. The following are ground station voice calls used during most IFR flights:

"(NAME) GROUND"	-Airport Ground Control
"(NAME) CLEARANCE DELIVERY"	-Airport Clearance Delivery
"(NAME) TOWER"	-Airport Control Tower
"(NAME) RADIO"	-Flight Service Station
"(NAME) METRO"	-Military Weather Service (PMSV)
"(NAME) DEPARTURE"	-ATC Departure Control
"(NAME) CENTER"	-Air Route Traffic Control Center
"(NAME) APPROACH"	-ATC Approach Control
"(NAME) G-C-A"	-Radar Ground Controlled Approach Facility at named airport (for PAR or ASR approaches)

12. Common words and phrases which are used to terminate transmissions are:

a. ACKNOWLEDGE - Let me know that you have received and understand this message.

b. Words to acknowledge a message:

AFFIRMATIVE - Yes

NEGATIVE -	No
ROGER -	I have received all of your last transmission (acknowledgment of reception only).
WILCO -	I have received your message, understand it and will comply.
VERIFY -	Request confirmation of information; e.g., "Verify assigned heading of 150."
READ BACK -	Read all of this message back to me (verbatim).
GO AHEAD -	Proceed with your message.
SAY AGAIN -	Request a repeat of the last transmission (the term "Repeat" is gunfire control talk for send another salvo and therefore not used).

13. You should acknowledge all calls or clearances unless the controller or FSS specialist advises otherwise. There are some occasions when controllers must issue time-critical instructions to other aircraft and they may be in a position to observe your response, either visually or on radar. If the situation demands your response, take the appropriate action or advise the controller of any problem. Example:

ATC CONTROLLER: "NAVY THREE ECHO TWO FOUR ONE, JACKSONVILLE CENTER, IDENT."

8-6 INTRODUCTION TO GROUND, AIRBORNE, LOST COMMUNICATION, AND EMERGENCY VOICE PROCEDURES

PILOT: Take action; actuate the "ident" switch on your transponder.

CONTROLLER: "NAVY THREE ECHO TWO FOUR ONE, RADAR CONTACT. " (The controller observed your ident on the radar.)

PILOT: "NAVY THREE ECHO TWO FOUR ONE, ROGER." (The term "radar contact" means no further position reports required.)

803. ATC

ATC is a service operated by appropriate authorities to promote the safe, orderly, and expeditious flow of air traffic. ATC facilities can be contacted over radio frequencies and ATC operational telephone lines (lines used for operational purposes such as controller instructions, briefings, opening and closing flight plans, issuance of IFR clearances and amendments, etc.).

ATC Towers

Towers have been established to provide for a safe, orderly, and expeditious flow of traffic on and in the vicinity of an airport. Towers use air/ground communications, visual signaling, and other devices to provide ATC services to aircraft operating in the vicinity of an airport or on the runways, taxiways, and other areas of an airport/heliport that are utilized for taxiing/hover taxiing, air taxiing, takeoff, and landing of aircraft, exclusive of loading ramps and parking areas.

Tower, Ground Control, and Clearance Delivery positions are all normally located in the control tower within close proximity to one another. Although they perform three separate functions, they work hand in hand to ensure the safe, orderly, and expeditious flow of arriving and departing aircraft.

Tower

At those airports/heliports with a tower, specific approval for entry onto the movement area must be obtained from ATC. The aircrew of departing aircraft should communicate with the control tower on the appropriate ground control/clearance delivery frequency prior to taxi to receive taxi clearance and/or IFR clearance information. Unless otherwise advised by the tower, the aircrew should remain on that frequency during taxiing and runup, then change to tower frequency when ready to request takeoff clearance.

Ground Control

Ground control frequencies are provided to eliminate frequency congestion on the tower frequency. They are used for issuance of taxi information, clearances, and other necessary contacts between the tower and aircraft or other vehicles operated on the airport. Aircrew who have just landed should not change from the tower frequency to the ground control frequency until they are directed to do so by the controller. Normally, only one ground control frequency is assigned at an airport.

Clearance Delivery

At locations where the amount of traffic so warrants, another frequency, designated as a clearance delivery frequency, may be assigned. If available, this frequency should be used to request flight clearances; otherwise, use Ground Control for this purpose. ATC issues clearances, and clearance delivery/ground control simply relays the clearance to aircrews.

Approach/Departure Control

Approach and departure control services are provided by an approach control facility for arriving and departing aircraft and, on occasion, enroute aircraft. At some airports not served by an approach control facility, the Air Route Traffice Control Center (ARTCC) provides limited approach control services.

Air Route Traffic Control Center

ARTCCs are established primarily to provide air traffic service to aircraft operating on IFR flight plans within controlled airspace, principally during the enroute phase of flight.

Flight Service Stations

FSSs are air traffic facilities that provide pilot briefings, enroute communications, and VFR search and rescue services; assist lost aircraft and aircraft in emergency situations; relay ATC clearances; originate Notices to Airmen; broadcast aviation weather and National Airspace System (NAS) information; receive and process IFR flight plans; and monitor NAVAIDs. In addition, at selected locations, FSSs provide Enroute Flight Advisory Service (Flight Watch), take weather observations, issue airport advisories, and advise Customs and Immigration of transborder flights.

Supplemental Weather Service Locations (SWSLs) are airport facilities staffed with contract personnel who take weather observations and provide current local weather information to aviators via telephone or radio. All other services are provided by the parent FSS. You may contact the nearest FSS anywhere by dialing 1-800-WX BRIEF.

Other Services

Automatic Terminal Information Service (ATIS)

The continuous broadcast of recorded noncontrol information in selected terminal areas. Its purpose is to improve controller effectiveness and to relieve frequency congestion by automating the repetitive transmission of essential but routine information, e.g., “Los Angeles Information Alpha. One three zero zero Coordinated Universal Time weather, measured ceiling 2000 overcast, visibility three, haze, smoke, temperature seven one, dew point five seven, wind two five zero at five, altimeter two niner niner six. ILS Runway two five left approach in use, runway two five right closed, advise you have Alpha.”

8-8 INTRODUCTION TO GROUND, AIRBORNE, LOST COMMUNICATION, AND EMERGENCY VOICE PROCEDURES

ATIS information includes the time of the latest weather sequence, ceiling, visibility, obstructions to visibility, temperature, dew point (if available), wind direction (magnetic) and velocity, altimeter, other pertinent remarks, instrument approach, and runway in use. The ceiling/sky condition, visibility, and obstructions to vision may be omitted from the ATIS broadcast if the ceiling is above 5000 feet and the visibility is more than five miles. ATIS is continuously broadcast on the voice feature of a TVOR/VOR/ VORTAC located on or near the airport or on a discrete VHF/UHF frequency. The departure runway will be given if different from the landing runway except at locations having a separate ATIS for departure. The broadcast may include the appropriate frequency and instructions for VFR arrivals to make initial contact with Approach Control. The aircrew of aircraft arriving at or departing from the terminal area can receive the continuous ATIS broadcast at times when cockpit duties permit, and may listen to as many repeats as desired. ATIS broadcast shall be updated upon the receipt of any official hourly and special weather information. A new recording will also be made when there is a change in other pertinent data such as runway change, instrument approach in use, etc.

UNICOM

A non-government communications facility which may provide airport advisory information at certain airports. Locations and frequencies of UNICOMs are shown on aeronautical charts and publications.

804. ESTABLISHING COMMUNICATIONS

Initial Contact

The term “initial contact” means the first radio call you make to a facility or the first call to a different controller/FSS specialist within a facility. When no previous communications exist, communications must be established prior to message transmission (except for very short messages such as checking-in after a hand-off). These are called “courtesy calls” when a detailed or lengthy message is to follow.

Use the following format:

1. Addressee

2. Aircraft identification

3. Type of message to follow or your request

Example A:

TO ESTABLISH COMMUNICATIONS WHEN A LENGTHY MESSAGE OR REQUEST IS TO FOLLOW:

PILOT: “MOBILE RADIO, NAVY 6E432.”

CONTROLLER: "NAVY 6E432, MOBILE RADIO, GO AHEAD."

Example B:

TO ESTABLISH COMMUNICATIONS WHEN THE TYPE OF MESSAGE TO FOLLOW IS INCLUDED (A VFR POSITION REPORT TO FSS).

PILOT: "MOBILE RADIO, NAVY 6E432, POSITION REPORT."

Example C:

TO ESTABLISH COMMUNICATIONS WHEN THE MESSAGE OR REQUEST IS SHORT:

PILOT: "MOBILE RADIO, NAVY 6E432, REQUEST YOUR ALTIMETER SETTING."

NOTE

During subsequent contacts with the same controller, state your message, position, or request in one transmission.

VFR Communications

Flight plan filing, destination changes, enroute weather, weather forecasts, and similar data should be requested through Flight Service Stations or appropriate military facilities capable of performing these services. On all VFR flights, pilots of UHF equipped aircraft should monitor the standard Flight Service Station UHF frequency 255.4 MHz. When flying below 18,000 feet MSL, a position report should be made to the nearest FSS every 200 NM or each hour, whichever occurs first. Above 18,000 feet MSL, all flights must be on an IFR flight plan over the continental U.S.

A VFR position report contains, in this order, the aircraft:

1. identification,
2. position,
3. time,
4. altitude,
5. type of flight plan (VFR), and
6. destination airport.

8-10 INTRODUCTION TO GROUND, AIRBORNE, LOST COMMUNICATION, AND EMERGENCY VOICE PROCEDURES

Example:

Navy 6E432 was over the Crestview VORTAC at 1427, altitude 6500 feet, enroute to NAS Whiting Field on a VFR flight plan.

"CRESTVIEW RADIO, NAVY 6E432, CRESTVIEW 27, 6500, VFR, NAVY WHITING."

IFR Communications

ATC has been delegated the responsibility to maintain air traffic separation of all aircraft flying on an IFR clearance. Your aircraft will be under the control of ATC from takeoff until landing, Departure Control (DEP) during the climb, ARTCC during the enroute phase, and Approach control (APP) during the descent into the terminal area.

DEP/APPs are located at airports and ARTCCs are located strategically around the country. The term ATC means one or all three collectively. As you will note in the text, the ATC clearance which you first receive will be the basic enroute clearance from the ARTCC.

ARTCCs are capable of direct communications with IFR air traffic on certain frequencies. Maximum communications coverage is possible through the use of remote center/air ground sites comprised of VHF and UHF transmitters and receivers. These sites are located throughout the United States and are indicated on the IFR Enroute Charts. Although the sites may be several hundred miles away from the ARTCC, they are remoted to the centers by land lines or microwave links. As IFR operations are expedited through the use of direct communications, pilots are requested to use these frequencies strictly for communications pertinent to the control of IFR aircraft. DEP, through the tower, will provide a specific departure clearance when you are ready for takeoff, and APP will issue your approach clearance upon your arrival at your destination.

Departure Control, through the tower, will provide a specific departure clearance when you are ready for takeoff and Approach Control will issue your approach clearance upon your arrival at your destination.

When a pilot files a flight plan with base o perations, the processing of the clearance begins. Flight plans should be filed at least 30 minutes prior to your desired takeoff time. Base operations personnel will relay the request to ATC (normally via a Flight Service Station) where it is placed in a computer with other clearance requests. The computer will analyze flight times, routes, altitudes, etc., and grant a specific clearance to each aircraft. ATC will relay this clearance to Ground Control/Clearance Delivery at the departure airport. (Normally ATC will wait until the clearance is requested.) Ground Control/Clearance Delivery will in turn relay the clearance to the pilot. All controlling agencies involved with the flight will receive copies of the clearance; DEP, ARTCCs along your route of flight, and APP at your destination.

During the time it takes for the clearance to be processed, the pilot normally preflights the aircraft. When requesting taxi, the pilot should state the fact that he is on an IFR flight plan and then state the destination and put the clearance on request. If ATIS is available, the code letter for the ATIS broadcast should also be included in the initial call.

805. GROUND VOICE PROCEDURES

The following format will be used for initial contacts:

1. Addressee – name of facility being called,
2. Calling unit's identification – your full aircraft identification as filed in the flight plan, and
3. Body of message.

Example:

PILOT l: 1. "NAVY MCCAIN GROUND"

2. "NAVY 6E432"

3. "TAXI, IFR MOBILE/BATES, INFORMATION BRAVO, CLEARANCE ON REQUEST"

When Ground Control receives this call, they will contact ATC and request your clearance. Ground Control will answer you in the following manner:

GROUND CTRL: "NAVY 6E432, NAVY McCAIN GROUND, TAXI RUNWAY 09, TIME 50, CLEARANCE ON REQUEST." (Meaning they are awaiting an answer from ATC.)

NOTE

Because of the high fuel consumption rate experienced by turbojet aircraft while operating on the ground, certain procedures have been established to enable pilots of these aircraft to determine taxi and ATC clearance delays prior to engine start.

When Ground Control receives the clearance from ATC they will relay it to the aircraft as follows:

GROUND CTRL: "NAVY 6E432, McCAIN GROUND, WE HAVE YOUR CLEARANCE, ADVISE WHEN READY TO COPY."

AIRCRAFT: "McCAIN GROUND, NAVY 6E432, READY TO COPY."

The ground controller will read your clearance.

GROUND CTRL: "ATC CLEARS NAVY 6E432 TO THE MOBILE REGIONAL AIRPORT, VIA RADAR VECTORS MERIDIAN, V543 EATON, V114 GULFPORT, V20 SEMMES, CLIMB AND MAINTAIN ONE SIX THOUSAND, CONTACT MERIDIAN DEPARTURE ON 276.4, SQUAWK 4023"

AIRCRAFT: "MCAIN GROUND NAVY 6E432, ROGER."

8-12 INTRODUCTION TO GROUND, AIRBORNE, LOST COMMUNICATION, AND EMERGENCY VOICE PROCEDURES

Normally ATC clearances will be relayed to pilots of departing aircraft by the **Ground Control position**. At many busy airports, however, a **Clearance Delivery position** has been established and a separate radio frequency has been designated for this purpose. No visual surveillance or control over the movement of aircraft is exercised by Clearance Delivery.

Example:

GROUND CTRL: "NAVY 6E432, McCAIN GROUND, YOUR CLEARANCE IS AVAILABLE, CONTACT CLEARANCE DELIVERY WHEN READY."

AIRCRAFT: “McCAIN GROUND NAVY 6E432, WILCO."

Change to clearance delivery frequency.

AIRCRAFT: “McCAIN CLEARANCE DELIVERY, NAVY 6E432, READY TO COPY." Clearance delivery will read you your clearance.

Elements Of An IFR Clearance

ATC IFR clearances will contain all or part of the following items. These items will normally correspond with those filed in the DD 175; however, it is ATC's prerogative to change any altitude, route, or departure time to maintain separation.

Example:

1.	Aircraft identification:	"6E432
2.	Clearance limit (point to which cleared):	Mobile Regional
3.	Departure procedure or SID:	Radar Vectors to Meridian
4.	Route of flight:	V523 LBY V114 GPT V20 SJI
5.	Altitude data:	16,000
6.	Holding instructions (if applicable):	None
7.	Special information (if applicable):	None
8.	Frequency and transponder code information:	276.4, Squawk 4023"

"ATC clears Navy 6E432 to Mobile Regional Airport via radar vectors to Meridian, then Victor-523 to Eaton, Victor-114 to Gulfport, Victor-20 to Semmes. Climb and maintain 16,000 feet, departure frequency is 276.4, squawk 4023."

Have DD 175 ready to note possible changes to your requested flight plan. Clearances must be read back verbatim **only if directed to "read back" by the controller**.

Abbreviated IFR Clearances

ATC may issue abbreviated IFR clearances to departing aircraft. These clearances do not include all of the information of a detailed clearance. An abbreviated clearance cannot be issued or accepted if the route of flight originally filed with ATC has been changed by the pilot. In this case, the pilot must request that a detailed clearance be issued by ATC. If ATC has changed any portion of the clearance, they will issue the changes to the pilot.

NOTE

When the term "flight planned route" or "as filed" is used, it does not include the altitude, SID or SID transitions. This will be issued separately.

Example of an abbreviated clearance:

"ATC CLEARS NAVY 6E432 TO THE MOBILE REGIONAL AIRPORT VIA RADAR VECTORS MERIDIAN, FLIGHT PLANNED ROUTE (OR AS FILED), CLIMB TO AND MAINTAIN ONE SIX THOUSAND, DEPARTURE FREQUENCY 276.4, SQUAWK 4023."

NOTE

ATC will issue a detailed clearance when requested by the pilot.

Elements Of An Abbreviated Clearance

Example:

1.	Aircraft identification:	"6E432
2.	Clearance limit:	Mobile Regional
3.	Departure procedure or SID:	Radar Vectors Meridian
4.	Route of flight:	**AS FILED**
5.	Altitude data:	**16,000**
6.	Holding instructions:	NONE
7.	Special information:	NONE
8.	Frequency and transponder code information:	276.4, squawk 4023"

8-14 INTRODUCTION TO GROUND, AIRBORNE, LOST COMMUNICATION, AND EMERGENCY VOICE PROCEDURES

Clearance Limits

Initial clearance granted to departing aircraft will include, whenever practicable, the destination airport as the clearance limit. ATC may, however, utilize short-range clearance procedures in lieu of clearance to the destination airport. When any part of the route beyond the short-range clearance limit differs from that requested in the original flight plan, the clearance will include the proposed routing beyond the clearance limit, preceded by the words "expect further clearance" (EFC).

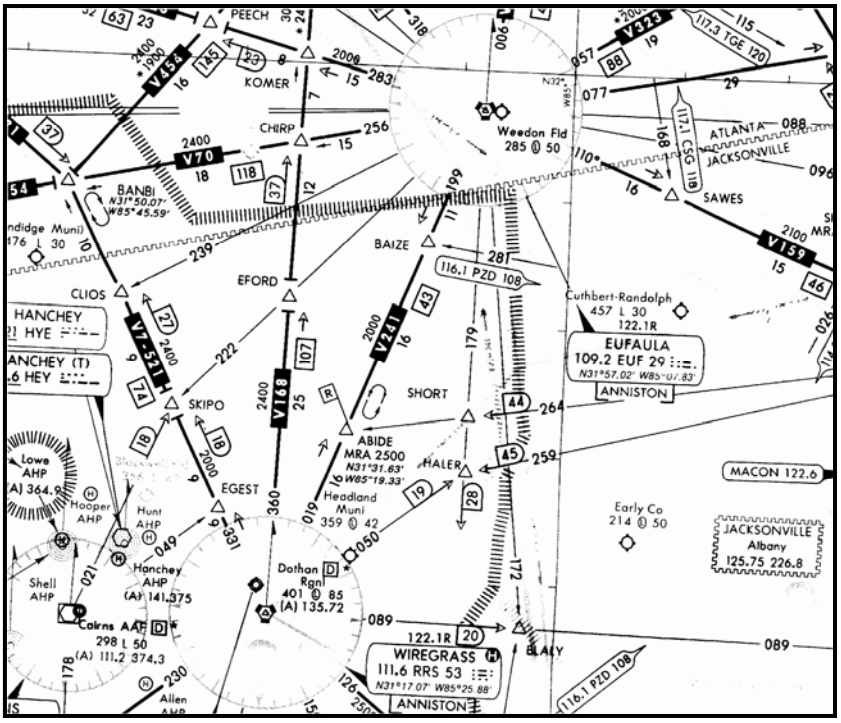

Figure 8-1 Clearance Limits

When a flight has been cleared to a fix short of its destination airport, additional clearance to proceed beyond or instructions to hold at the fix will be issued at least five minutes before the aircraft is estimated to reach the fix. If additional clearance has not been received and you still have two-way communications with the center, hold in accordance with the depicted pattern. If no pattern is depicted, enter a standard holding pattern on the course from which the aircraft approached the fix.

When an air traffic clearance has been obtained under IFR, the pilot in command of the aircraft shall **NOT** deviate from the provisions thereof unless an amended clearance is obtained. The most important and guiding principle to remember is the last ATC clearance received has precedence over related portions of any previous ATC clearance. It is possible to change your flight plan while enroute; however, you must request and receive an amended clearance prior to deviating from your original clearance. Should a pilot, for any reason, be incapable of complying with any provision of an amended ATC clearance or restriction, the pilot is expected

to immediately advise ATC. A brief reason, such as "unable due to fuel," may be included if considered necessary.

Upon arriving in the vicinity of your destination airport, you will be handed off to the Approach Control serving the terminal airport. Approach Control will issue a clearance for an instrument approach to your destination, depending on your intentions and the existing traffic in the area. They may let you use an approach of your own choosing or they may assign you a specific one. Normally the Approach Control facility will have extensive radar coverage of the terminal area. They may use this radar for traffic advisory information or they may use it for a radar approach to the field. Approach Control will handle all Ground Controlled Approaches (GCA) serving the airport in their area.

The Terminal Radar Approach Control (TRACON) facility controls aircraft approaching and departing airports, generally out to about 50 miles from the airport. A TRACON "sees" aircraft using radar. A TRACON has responsibility for controlling specifically defined and limited sections of "airspace." That involves ensuring that all aircraft entering or departing the airspace are kept separated at safe distances. When necessary TRACONs reroute aircraft to avoid dangerous weather patterns. A TRACON's total airspace is subdivided into small sections called sectors. Each sector is assigned to an individual air traffic controller who works in the TRACON facility. That controller directs the movement of aircraft in and out of that space on an individual radar screen and maintains voice contact with pilots. Although the controller's individual responsibility is only for his or her own sector, all controllers within a TRACON have full radar information on all the aircraft that are under control of the entire TRACON facility. Because they are colocated, these controllers are able to communicate with one another instantaneously, something that contributes significantly to assuring the safety of aircraft.

Approach/Departure Control at Navy airfields normally consists of a Radar Air Traffic Control Center (RATCC). This same type of facility at an Air Force Base is called Radar/Approach Control (RAPCON). The following diagram shows air traffic over the United States during a peak period and provides a link to the FAA for additional information.

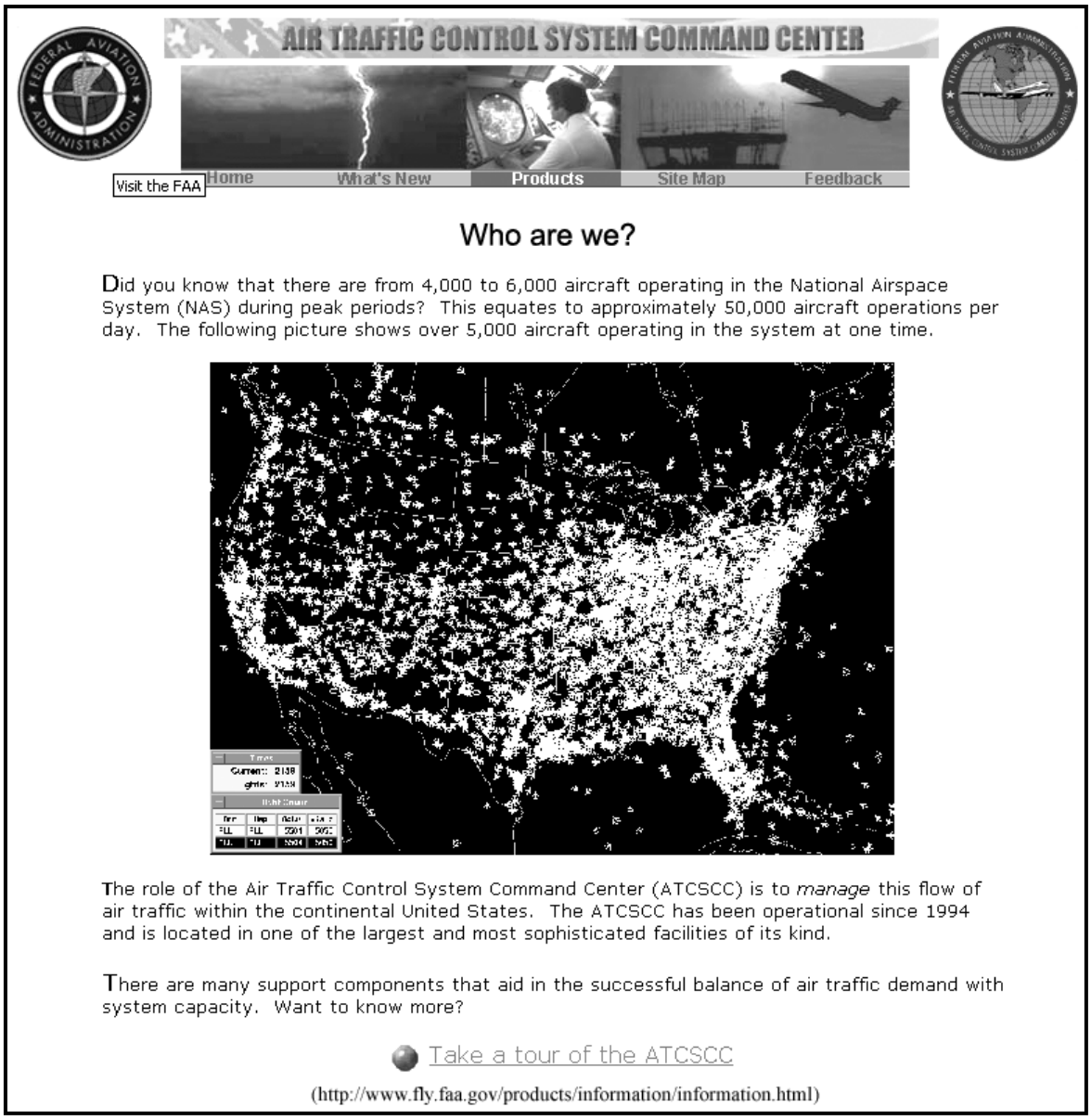

Figure 8-2 ATC System Command Center

806. TAKEOFF/DEPARTURE INSTRUCTIONS

After you have your basic IFR clearance, you will be given departure (sometimes referred to as "Release") instructions immediately prior to takeoff. Departure control frequencies, transponder codes, and climb-out instructions may be contained in the departure instructions. The example below may vary depending on facility and controller.

When at the hold short line:

PILOT: "McCAIN TOWER, NAVY 6E432, TAKEOFF, IFR."

NOTE

This call to tower differs from the standard "takeoff" called used for VFR flying. You are requesting an IFR departure into the ATC airway structure. Tower instructions to "HOLD SHORT" or "POSITION AND HOLD" MUST BE READ BACK TO TOWER.

TOWER: "NAVY 6E432, McCAIN TOWER, AFTER TAKEOFF TURN RIGHT HEADING 180, CLIMB TO 16,000, SQUAWK 4023, CONTACT MERIDIAN DEPARTURE ON 276.4 WHEN SAFELY AIRBORNE, YOU ARE CLEARED FOR TAKEOFF."

PILOT: "McCAIN TOWER, NAVY 6E432, WILCO."

Departure Control

After takeoff, the first controlling agency you will talk to is the local Approach/Departure Control. Their primary objectives are to:

1. Increase the departure rate of IFR aircraft from airports, and

2. Establish aircraft on course by the most expeditious routes consistent with the traffic situation.

Departure Control will establish aircraft enroute in one of three ways. All three departures will take you to your first enroute fix. They may simply issue radar vectors, clear you direct, or they will be the controlling agency for a published DP. Departure procedures are available at most military and joint civil/military airports. After a DP is accepted in the air traffic clearance, the pilot will conform to exact routings, altitudes, and specific restrictions shown on the departure chart or received from the air traffic controller. DPs can be found in the base operations flight planning room. Each graphic departure procedure will have a name and number depending upon the direction of departure. Nongraphic departure procedures are also found under the section in the Instrument Approach Procedures book.

DP Example:

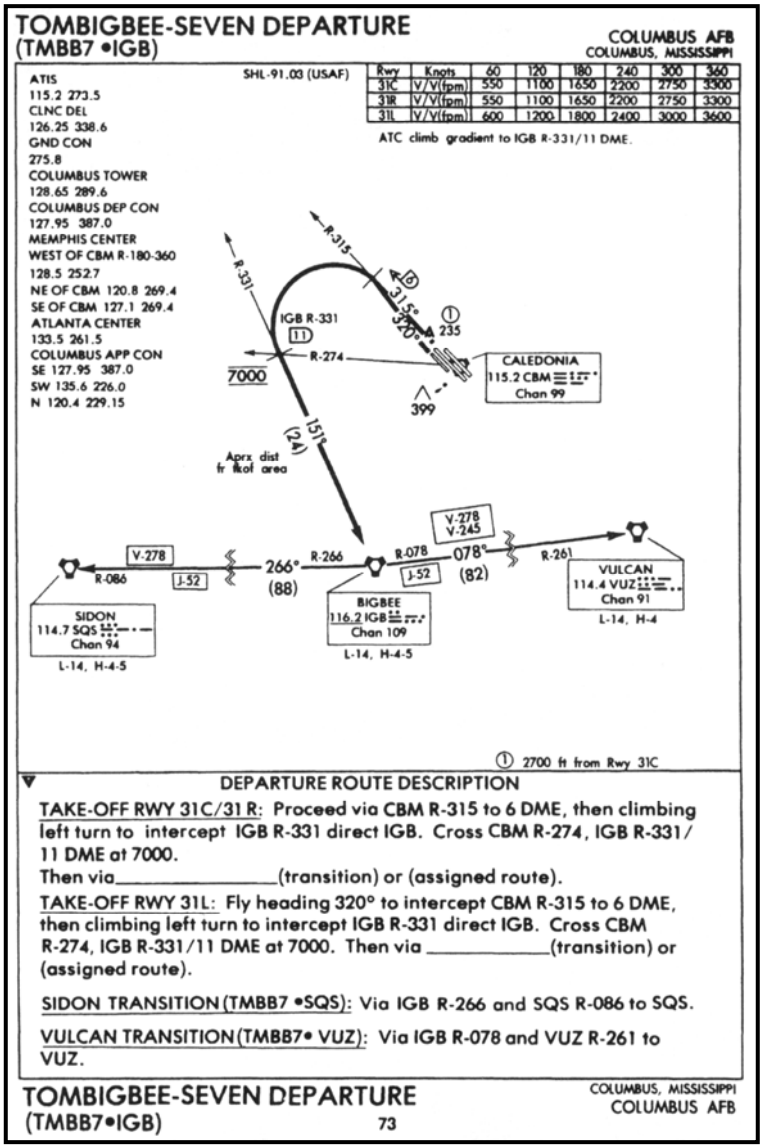

Figure 8-3 DP

807. AIRBORNE VOICE REPORTS

Each segment of an IFR flight has its own detailed procedures; i.e., Departure Control voice procedures, Air Route Traffic Control procedures, and Approach Control procedures. Further, each segment procedures are broken down into situations; e.g., initial contact reports, position reports, etc., and whether the flight is operating in a radar environment or not. DEP/APP (located at airports) and ARTCC (located at centers) coordinate the transfer of aircraft, called "handoff", between themselves as to the frequency assignment, position, time, altitude assignment, and radar environment of the transfer. Therefore, the initial contact report from the pilot to the new controller is expected and should include the appropriate message information.

Departure Control Reports

NOTE

All sample communications will reference the flight planning lecture problem**.**

Airborne Report

A pilot's first voice report on an IFR flight will be an "OFF" report to Departure Control when safely airborne. The report should include the name of the departure airport and the altitude assignment. Example:

PILOT: "MERIDIAN DEPARTURE, NAVY 6E432, OFF NAVY McCAIN, PASSING 1,500 FOR 16,000."

DEPARTURE CTRL: "NAVY 6E432, RADAR CONTACT"

OR

"NAVY 6E432, NEGATIVE RADAR CONTACT, REPORT MERIDIAN."

NOTE

We will first go through a radar contact scenario.

To provide radar vectors, Departure Control might say:

DEPARTURE CTRL: "NAVY 6E432, TURN RIGHT 240, VECTORS TO THE MERIDIAN VORTAC"

PILOT: "NAVY 6E432, RIGHT 240."

Approaching the Meridian VOR, the controller would expect you to receive the VOR signal and be able to navigate to the VOR on your own.

DEPARTURE CTRL: "NAVY 6E432, POSITION NOW 4 MILES EAST OF THE MERIDIAN VOR, CLEARED FROM YOUR PRESENT POSITION DIRECT TO THE MERIDIAN VOR, RESUME NORMAL NAVIGATION."

PILOT: "NAVY 6E432, WILCO."

Frequency Change-Radar Environment

A frequency change will occur when an aircraft is handed off from Departure Control to an ARTCC, from one center to another, from sector to sector within a center, or from a center to Approach Control. If the aircraft is presently in a radar environment, the services **MAY** be terminated. The controller may or may specify a fix, time, or altitude when the transfer is to take place. The controller will use the following phraseology to affect the transfer.

CONTROLLER: "NAVY 6E432, MERIDIAN DEPARTURE, CONTACT MEMPHIS CENTER ON 323.0 AT (FIX, OR TIME, OR ALTITUDE)."

Pilots are expected to maintain a listening watch on the transferring controller's frequency until the time, fix, or altitude specified. The controller will omit frequency change restrictions whenever pilot compliance is expected upon receipt.

Example:

CONTROLLER: “NAVY 6E432, MERIDIAN DEPARTURE, CONTACT MEMPHIS CENTER ON 323.0."

PILOT: “NAVY 6E432, SWITCHING TO MEMPHIS CENTER, 323.0”

Initial Contact – Radar Environment

When operating in a radar environment, just report altitude:

"(Name) CENTER (aircraft identification) at (**EXACT** altitude/flight level) or / LEAVING (**EXACT** altitude/flight level) CLIMBING/DESCENDING TO MAINTAIN (altitude/flight level)."

NOTE

Exact altitude/flight level means to the nearest 100-foot increment. Exact altitude/flight level reports on initial contact provide ATC with information required prior to using MODE C altitude information for separation purposes.

Example:

PILOT: "MEMPHIS CENTER, NAVY 6E432, ONE SIX THOUSAND."

If radio communications cannot be established on the new frequency, attempt to re-contact the transferring controller for further instructions. Write down each frequency assigned in the order received. If unable to contact the transferring controller, contact the nearest FSS on 255.4 and request they contact either controller for further instructions.

Enroute Phase – Radar Environment

As you approach the boundary of Memphis Center's airspace, you would be transferred to Houston Center via a frequency change as previously described.

Discrete Frequencies

Once in a radio contact with ATC, you can expect to be assigned a **discrete frequency**. A discrete frequency is a separate frequency for use in direct pilot-controller communications in ATC which reduces frequency congestion by controlling the number of aircraft operating on a particular frequency at one time. Discrete frequencies are normally designated for each control sector in enroute/terminal ATC facilities. Pilots on IFR flights are required to maintain a continuous watch on assigned ATC frequencies, and furnish reports as required. One frequency all UHF equipped aircraft are required to monitor is 243.0 MHz (guard) for emergency purposes whether on an IFR or a VFR flight.

Arrival Phase – Radar Environment

Approaching the Mobile area and depending on traffic conditions, Houston Center would start descending you to a lower altitude in preparation for an approach into Mobile.

Example:

HOUSTON CENTER: "NAVY 6E432, DESCEND AND MAINTAIN 8000."

Leaving Altitude Report

A voice report is required to the controlling agency without request upon vacating an assigned altitude when cleared to a lower altitude. The report includes the altitude being vacated.

Example:

PILOT: "HOUSTON CENTER, NAVY 6E432, LEAVING 16,000 FOR 8000."

As you get closer to the Mobile area, you will be switched to Mobile Approach.

HOUSTON CTR: "NAVY 6E432, CONTACT MOBILE APPROACH ON 269.3."

PILOT: “NAVY 6E432, SWITCHING TO MOBILE APPROACH, 269.3.”

ATIS

Automatic Terminal Information Service (ATIS) is a transcribed broadcast service available at most large airports. ATIS provides essential, but routine terminal information such as ceilings, visibility, altimeter setting, wind, and duty runway, etc. On initial contact with Approach

Control, pilots should notify the controller that they have received the broadcast by code letter of the broadcast.

Example:

"… WITH INFORMATION DELTA."

Approach Control - Radar Environment

The pilot's initial contact with Approach Control in a radar environment would be (name) APPROACH (aircraft identification), (altitude), (ATIS information received), REQUEST.

PILOT: "MOBILE APPROACH, NAVY 6E432, 8000 WITH INFORMATION (letter), REQUEST."

MOBILE APP: "NAVY 6E432, MOBILE APPROACH, MOBILE ALTIMETER IS XX.XX, SAY YOUR REQUEST."

PILOT: "APPROACH, NAVY 6E432, REQUEST VOR-ALPHA APPROACH TO MOBILE REGIONAL AIRPORT."

MOBILE APP: "NAVY 6E432, CLEARED DIRECT SEMMES, CLEARED FOR THE VOR-ALPHA APPROACH."

Passing over Semmes, you would start the VOR-Alpha approach and make the mandatory report leaving altitude:

PILOT: "MOBILE APPROACH, NAVY 6E432, LEAVING 8000 FOR THE APPROACH."

NOTE

> You do not need to say "leaving 8000 for 1800" because the controller knows you are descending to the altitude published in the approach plates.

In the vicinity of the Final Approach Fix, Mobile Approach will have you contact Mobile tower for clearance to land. Example:

MOBILE APP: "NAVY 6E432, CONTACT MOBILE TOWER, 239.0"

PILOT: "MOBILE APPROACH NAVY 6E432, SWITCHING TO MOBILE TOWER, 239.0" When the new frequency is set, contact the tower.

PILOT: "MOBILE TOWER, NAVY 6E432," (then state position, i.e., "3 DME").

MOBILE TOWER: "NAVY 6E432, WIND 090 AT 10, CLEARED TO LAND RUNWAY 14, CHECK WHEELS DOWN."

PILOT: "MOBILE TOWER, NAVY 6E432, CLEARED TO LAND, GEAR IS DOWN AND LOCKED."

NOTE

A gear down report to tower or approach is MANDATORY to receive clearance to land.

Nonradar Environment

Now consider the same route of flight in a nonradar environment. All calls up to and including the departure control will be the same. After your "OFF" report to Meridian Departure, you will receive the following response in a nonradar environment. Example:

MERIDIAN DEP: "6E432, MERIDIAN DEPARTURE, NEGATIVE RADAR CONTACT. CLEARED FROM YOUR PRESENT POSITION DIRECT TO THE MERIDIAN VOR, REPORT MERIDIAN."

PILOT: "6E432, WILCO."

Position Reports – Nonradar Environment

Federal Aviation Regulations require pilots to furnish position reports passing certain reporting points. Reporting points are indicated by symbols on enroute charts. The designated compulsory reporting point symbol is the solid triangle (▲), the "on request" reporting point symbol is the open triangle (Δ). Reports of passing an "on request" reporting point are only necessary when requested by ATC.

Position reports are also required when passing a fix defining a direct route of flight as used in the flight plan or ATC clearance to define the route of flight off airways.

Courtesy Calls

A position report is always preceded by a "courtesy" call to alert the controller that a position report is to follow. It contains the name of the compulsory reporting point.

Upon flying over the Meridian VOR, you would give your courtesy call to Meridian Departure.

Example:

PILOT: "MERIDIAN DEPARTURE, NAVY 6E432, MERIDIAN."
The controller will either acknowledge your courtesy call with a “GO AHEAD” and the pilot will make a full position report or “ROGER” and the pilot will not make the position report. If the pilot’s courtesy call is acknowledged by “GO AHEAD,” give the position report using the following format:

IFR Position Report

1. Identification
2. Position
3. Time
4. Altitude
5. Type of flight plan (Not required in IFR reports made direct to ARTCC)
6. Next position reporting point
7. Name only of the next succeeding reporting point along the route of flight
8. Remarks

This format is on the inside back cover of the IFR Supplement as a quick reference.

The acronym to remember the format for making IFR position report is "**P T A P T P**" which stands for:

P osition (present position at the compulsory reporting point)

T ime (actual time at the reporting point)

A ltitude (your present altitude)

P osition (the next compulsory reporting point along your route of flight)

T ime (ETA at the next reporting point)

P osition (succeeding reporting point)

Example:

PILOT: "MERIDIAN DEPARTURE, NAVY 6E432, MERIDIAN 07, PASSING 2000 FOR 16,000, EATON, 27, GULFPORT."

P - MERIDIAN

T - 07

A - PASSING 2000 FOR 16,000

P - EATON

T - 27

P – GULFPORT

Response To Your Position Report

MERIDIAN DEP: "NAVY 6E432, MERIDIAN DEPARTURE, ROGER, CONTACT MEMPHIS CENTER ON 124.4 OR 323.0."

PILOT: "MERIDIAN DEPARTURE, NAVY 6E432, SWITCHING TO MEMPHIS CENTER, 323.0."

Initial Contact Enroute Reports – Nonradar Environment

The following phraseology should be used by pilots for establishing the initial contact with a facility:

1. When instructed to report enroute between two position reporting points or an altitude or time where your position is unknown:

"(Name) CENTER (aircraft identification) ESTIMATING (next reporting point) (time), (altitude/flight level) or PASSING (altitude/flight level) FOR (altitude/flight level)."

Example:

PILOT: "MEMPHIS CENTER, NAVY 6E432, ESTIMATING EATON, 27, PASSING 4000 FOR 16,000."

MEMPHIS CTR: "NAVY 6E432, MEMPHIS CENTER, REPORT EATON."

PILOT: "MEMPHIS CENTER, NAVY 6E432, WILCO."

2. When instructed to report at a fix where a position report will follow the initial contact:

"(Name) CENTER (aircraft identification), (position)."

8-26 INTRODUCTION TO GROUND, AIRBORNE, LOST COMMUNICATION, AND EMERGENCY VOICE PROCEDURES

Example: (If instructed to contact Memphis Center at Eaton.)

PILOT: "MEMPHIS CENTER, NAVY 6E432, EATON."

The controller will either acknowledge with a "GO AHEAD" and the pilot will make a full position report or "ROGER" and the pilot will not make the position report.

When the second or the third reporting point is your destination's initial approach fix, add the word "destination" to the position report. Example:

PILOT: "MEMPHIS CENTER, NAVY 6E432, EATON, 27, 16,000, GULFPORT, 46, SEMMES, DESTINATION."

MEMPHIS CTR: "NAVY 6E432, MEMPHIS CENTER, ROGER."

NOTE

> Position reports are not required in a radar environment. Discontinue position reports when advised that your aircraft is in "RADAR CONTACT." Once advised that you are in radar contact, this fact will not be repeated when handed off to another controller. Resume position reports when advised "RADAR CONTACT LOST" or "RADAR SERVICE TERMINATED."

When in radar contact and ATC requests a pilot to report a specific fix, report only the specific fix requested.

Example:

PILOT: “MEMPHIS CENTER, NAVY 6E432, EATON.”

Enroute Phase – Nonradar Environment

As you approach the boundary of Memphis Center's airspace, you will be transferred to Houston Center via a frequency change. Initial contact with Houston Center will be accomplished as previously described.

Arrival Phase – Nonradar Environment

Approaching the Mobile area and depending upon traffic conditions, Houston Center will start descending you to a lower altitude in preparation for an approach into Mobile.

Example:

HOUSTON CENTER: "NAVY 6E432, DESCEND AND MAINTAIN 8000, REPORT LEVEL."

LEAVING ALTITUDE REPORT (JUST AS IN RADAR ENVIRONMENT)

PILOT: "HOUSTON CENTER, NAVY 6E432, LEAVING 16,000 FOR 8000."

PILOT: "HOUSTON CENTER, NAVY 6E432, LEVEL 8000."

HOUSTON CENTER: "NAVY 6E432, HOUSTON CENTER, CONTACT MOBILE APPROACH ON 269.3."

PILOT: "HOUSTON CENTER, NAVY 6E432, SWITCHING TO MOBILE APPORACH ON 269.3."

Approach Control Voice Reports – Nonradar Environment

Prior to reaching the destination IAF, the center will hand off aircraft to Approach Control. If ATIS is available, the pilot should obtain current information prior to contacting the destination Approach Control. The pilot's initial contact with Approach Control in a nonradar environment will be (make a courtesy call if the situation warrants it):

(Name) APPROACH (aircraft identification) ESTIMATING (IAF), (time), (altitude) (and a request for the type of instrument approach to be made; PAR, VOR, TACAN, etc.) TO (airport). Example:

PILOT: "MOBILE APPROACH, NAVY 6E432, ESTIMATING SEMMES, THREE FIVE, EIGHT THOUSAND WITH INFORMATION “DELTA”, REQUEST VOR-ALFA TO MOBILE REGIONAL AIRPORT."

MOBILE APP: "NAVY 6E432, CLEARED DIRECT SEMMES, CLEARED FOR THE VOR-ALFA APPROACH, MAINTAIN 8000 UNTIL SEMMES, REPORT SEMMES."

PILOT: “NAVY 6E432 WILCO.”

Passing over Semmes, you will execute the VOR A approach and make the following voice report:

PILOT: "MOBILE APPROACH, NAVY 6E432, SEMMES, 58, LEAVING 8000."

MOBILE APP: "NAVY 6E432, ROGER."

In this example you report Semmes only because the controller requested. **The IAF is not a mandatory voice report**. You report leaving 8000 because leaving altitude is always a mandatory report. You do not report the altitude to which you are going because it is part of a published approach. For mandatory nonradar communications see Flight Information Handbook section B.

8-28 INTRODUCTION TO GROUND, AIRBORNE, LOST COMMUNICATION, AND EMERGENCY VOICE PROCEDURES

Final Approach Fix Report

In a nonradar environment a voice report is required to Approach Control without request when over the final approach fix (FAF). The report consists of position only. No altitude is necessary as it is specified on the approach plate. Some final approach fixes are not named. In this case report them as "final approach fix." This situation is encountered more on TACAN than VOR approaches.

Example:

PILOT: "MOBILE APPROACH, NAVY 6E432, SEMMES." (SEMMES is both the IAF and FAF.)

MOBILE APP: "NAVY 6E432, CONTACT MOBILE TOWER, 239.0."

PILOT: "MOBILE APPROACH, NAVY 6E432, SWITCHING TO MOBILE TOWER, 239.0."

When the new frequency is set, contact the tower:

PILOT: "MOBILE TOWER, NAVY 6E432" (then state position, i.e., "3 DME").

MOBILE TOWER: "NAVY 6E432, THE WIND 095 AT 12, CLEARED TO LAND RUNWAY 14, CHECK WHEELS DOWN."

PILOT: "MOBILE TOWER, NAVY 6E432, CLEARED TO LAND, GEAR IS DOWN AND LOCKED."

NOTE

A gear down report to tower or approach is MANDATORY to receive clearance to land.

808. ADDITIONAL REPORTS

The reference for the mandatory VOICE reports to ATC is the FIH (Flight Information Handbook). See the FIH for additional required reports.

Missed Approach Report (Radar And Nonradar Environments)

A report to Approach Control shall be made, without request, when the approach has been missed. The report will include "MISSED APPROACH" and a request for another approach or for clearance to the alternate.

If requesting clearance to the alternate after the missed approach, give

1. Name of the alternate airport
2. Route
3. Desired altitude
4. Fuel endurance in hours plus minutes
5. ETE to the alternate IAF in hours plus minutes.

The acronym for remembering the content of this report is "**DRAFT**":

D – Destination

R – Route

A – Altitude requested

F – Fuel remaining (in hours plus minutes, not pounds)

T – Time enroute

Example:

"MOBILE APPROACH, NAVY 6E432, MISSED APPROACH, REQUEST CLEARANCE TO NAVY WHITING, VIA DIRECT PENSI INTERSECTION, FOUR THOUSAND, FUEL ONE PLUS THREE ZERO, ESTIMATED TIME ENROUTE ZERO PLUS THREE FIVE."

Altitude Verification

At times controllers will ask pilots to verify the fact that they are at a particular altitude. The phraseology used will be "VERIFY AT (altitude)." In climbing/descending situations, controllers may ask pilots to "VERIFY ASSIGNED ALTITUDE AS (altitude)." Pilots should confirm that they are at the altitude stated by the controller or that the assigned altitude is correct as stated. If this is not the case, they should inform the controller of the actual altitude being maintained or the different assigned altitude. Pilots should not take action to change their actual altitude to that stated in the controller's verification request unless the controller specifically authorizes a change.

Holding Reports

Pilots are required to report: (1) the time and altitude when reaching any assigned holding fix or point to which cleared, and (2) when leaving any assigned holding fix or point. (Not required by pilots of aircraft involved in instrument training at military terminal area facilities when radar service is being provided.)

8-30 INTRODUCTION TO GROUND, AIRBORNE, LOST COMMUNICATION, AND EMERGENCY VOICE PROCEDURES

Vacating Altitude Report

Pilots are required to report to the ATC controlling agency when vacating an assigned altitude for a newly assigned altitude. The report will include the altitude being vacated and the altitude to which climbing/descending. It is not required to report reaching an assigned altitude or passing altitudes unless requested.

Example:

"HOUSTON CENTER, NAVY 6E432, LEAVING ONE SIX THOUSAND FOR EIGHT THOUSAND."

Speed Adjustments

Advise ATC anytime cruising true airspeed varies plus or minus 5%, or 10 knots, whichever is greater, from that given in the flight plan. When complying with speed adjustments maintain an indicated airspeed within plus or minus 10 knots of the assigned airspeed. Holding airspeed, enroute descent airspeed, and approach airspeed changes do not require reports.

Malfunctions

Pilots are required to report to the ATC controlling agency any in-flight malfunctions of navigation or communication equipment, such as loss of VOR or TACAN or impairment of communications capability. The report shall include aircraft's ID, equipment affected, the degree to which the pilot's capability to operate IFR is impaired, and the nature and extent of assistance desired from the controlling agency.

Weather (WX)

Pilots encountering unusual or unforecasted weather, weather on an IFR approach differing from the latest observation, or weather below landing minimums which caused the pilot to execute a missed approach are required to make a Pilot Weather Report or PIREP. The PIREP format is contained in the Flight Information Handbook.

809. SUMMARY OF IMPORTANT IFR VOICE REPORTS

OFF REPORT "-------- OFF (AIRPORT) CLIMBING TO (ALTITUDE), OVER."

INITIAL CONTACT REPORT WITH CENTERS/SECTOR CONTROLLERS (NONRADAR)

1. AT A FIX "-------- (POSITION), OVER."

2. AT A TIME OR ALTITUDE "--------ESTIMATING (POSITION), (TIME), (ALTITUDE),"

INITIAL CONTACT REPORT WITH CENTERS/SECTOR CONTROLLERS (RADAR) "----- (ALTITUDE)."

POSITION REPORTS

COURTESY CALL "--------(POSITION), OVER."
P T A P T P "--------(POSITION), (TIME), (ALTITUDE), (POSITION), (TIME), (POSITION)."

HOLDING REPORTS

ENTERING "--------(POSITION), (TIME), (ALTITUDE)."
LEAVING "-------- DEPARTING (POSITION)."

VACATING ALTITUDE REPORT

"--------LEAVING (ALTITUDE) FOR (ALTITUDE)."

APPROACH CONTROL REPORTS

INITIAL CONTACT "-------- ESTIMATING (IAF), (TIME), (ALTITUDE), REQUEST (TYPE APPROACH) TO (AIRPORT)."

VACATING ALTITUDE WHEN CLEARED FOR APPROACH "--------LEAVING (ALTITUDE)."

FINAL APPROACH FIX (NONRADAR ONLY) "-------- (POSITION) INBOUND."
OR "--------FINAL APPROACH FIX INBOUND."

MISSED APPROACH "-------- MISSED APPROACH REQUEST (ANOTHER APPROACH OR CLEARANCE TO ALTERNATE)."

810. LOST COMMUNICATIONS

For the following examples, use the procedures contained in the Flight Information Handbook, Section A. Additionally, you will need to view the Low Altitude Chart 18, panels E, F and G.

Assume that two pilots have filed an IFR flight plan from NAS Whiting Field to Marianna Municipal Airport and the route of flight reads "direct to Crestview VORTAC, V198 to Marianna VORTAC." If ATC cleared the flight "as filed" and the pilots had two-way radio failure in IFR conditions in the vicinity of Corky (CORKY) Intersection, they would proceed to Marianna VORTAC via V198 according to the last ATC clearance.

Let's develop the example in the above paragraph a step further. Assume the pilots filed the flight plan similarly, but ATC only gave a short range clearance and cleared them to Chews (CHEWS) Intersection via V198. Chews Intersection is now the clearance limit. If the pilots

had two-way radio failure in IFR conditions in the vicinity of Corky (CORKY) Intersection, they would proceed to Chews (CHEWS) Intersection according to the ATC clearance and then proceed to Marianna VORTAC according to the filed flight plan.

Developing the example one more step, assume that the pilots again filed the same flight plan. This time, however, ATC cleared the pilots as follows: "…cleared direct to Crestview VORTAC V241 To Dared (DARED) Intersection. Expect further clearance direct to Marianna VORTAC". In this case, the short range clearance limit, Dared (DARED) Intersection, is not on the filed flight plan.

When the short range clearance limit is not on the **FILED** route of flight, a pilot should request expected further clearance (EFC) from the short range clearance limit to the intended destination if the EFC is not contained in the original clearance. If the pilots developed two-way radio failure enroute to Dared (DARED) Intersection, they would continue to Dared (DARED) according to the ATC clearance and proceed to Marianna VORTAC according to the EFC.

With two-way radio failure in IFR conditions on an ATC clearance, a pilot will fly at the **highest** of the following altitudes for the **route segment** being flown:

1. The altitude assigned in the last ATC clearance received;

2. The Minimum Enroute Altitude depicted on IFR Enroute Charts; or

3. The altitude ATC has advised may be expected in a further clearance.

When it is necessary to climb or descend the following applies:

1. Climb or descend to the assigned altitude in accordance with the last ATC clearance received,

2. Climb or descend to the Minimum Enroute Altitude or climb to the Minimum Crossing Altitude at the time or place necessary to comply with the minimum, or

3. Climb/Descend to the altitude ATC has advised may be expected in a further clearance at the time or place included in the expected further clearance.

Assume two pilots filed an IFR flight plan from Cross City to Marianna Municipal Airport and the route of flight reads: Direct to HEVVN Intersection V521 to Marianna VORTAC. If ATC cleared the pilots as filed, maintain 5000 feet, and they experienced two-way radio failure prior to reaching HEVVN, the pilots would climb to 7000 feet and proceed on V521 to TERES at which time they would descend to 5000 (highest altitude for route segment).

Notice on the chart that HEVVN has a Minimum Crossing Altitude (MCA) of 7000 feet on V521 when flying west. In this case, the pilot must begin the climb so as to pass over HEVVN at 7000 feet.

While on an IFR flight plan with a short range clearance limit, if no holding instructions have been received, continue to the IAF/navigation facility/fix serving the destination airport at the last assigned altitude or Minimum Enroute Altitude (MEA), whichever is higher. If holding instructions have been received, leave the holding fix at the expected further clearance time. Begin descent to commence the approach from the enroute altitude upon reaching the fix from which the approach begins, but not before the estimated time of arrival derived by adding the estimated time enroute (as filed on the flight plan) to the actual departure time.

The pilots have filed an IFR flight plan from Monroe Co. Airport to Troy Municipal Airport via direct CHAFF Intersection, V70 to CRENS Intersection, direct to Troy VOR (the Initial Approach Fix) for a VOR approach to Troy Municipal. If the pilots received a short range clearance of CRENS and then had a two-way radio failure prior to reaching CRENS in IFR conditions, they would proceed to CRENS via the ATC clearance and then direct to the Troy VOR **WITHOUT** holding at CRENS. If, however, the pilots received a clearance to hold at CRENS prior to the radio failure, they would enter holding at CRENS until the EFC time, then proceed to the Troy VOR.

When holding at a short range clearance limit with two-way radio failure in IFR conditions, a pilot should leave the clearance limit at the expected further clearance time and continue to the destination's IAF and execute a full standard instrument approach upon arrival (but not before the ETA).

Going back to the problem developed earlier, assume the pilots were again issued a short range clearance limit of CRENS and prior to reaching CRENS Intersection received the following clearance ". . . hold west of CRENS Intersection on V70, expect further clearance at 1315 . . ." If the pilots experienced two-way radio failure after receiving the above clearance, they would proceed to CRENS via the ATC clearance and hold.

The pilot would leave holding at CRENS at 1315. If holding was necessary at the IAF/navigation facility/fix to be used for the approach at the destination airport, holding and descent to the initial approach altitude for the execution of the instrument approach would be accomplished in a holding pattern in accordance with the procedure depicted on the FLIP Terminal plate. If no holding pattern is depicted, holding and descent would be accomplished in a holding pattern on the final approach course inbound to the initial approach fix (IAF) with turns on the procedure turn side. For an arrival holding example, view the TACAN 14 approach at Whiting Field NAS.

An aircraft operating in accordance with Approach Control instructions, which had departed an outer fix under radar control and subsequently lost communications, would be expected to proceed by the most direct course possible to the appropriate Initial Approach Fix and execute a **FULL** standard instrument approach. Again view the TACAN 14 approach at Whiting Field NAS; PENSI can be considered an outer fix.

A full standard instrument approach need not be executed if the purpose of the radar vector was to establish the aircraft on the final approach course.

8-34 INTRODUCTION TO GROUND, AIRBORNE, LOST COMMUNICATION, AND EMERGENCY VOICE PROCEDURES

Example:

"..TEN MILES FROM WHITING, EXPECT VECTORS TO FINAL APPROACH COURSE FOR A STRAIGHT_IN VOR RUNWAY TWO THREE APPROACH. TURN LEFT HEADING TWO TWO ZERO, DESCEND TO AND MAINTAIN TWO THOUSAND UNTIL ESTABLISHED ON THE ZERO THREE ZERO RADIAL."

If communication were lost after receiving this clearance, since it is clear that the vectors are for the purpose of alignment on the final approach course for a straight-in approach to the airport, the pilot would only execute the final segment of the approach.

On every IFR flight a Flight Information Handbook (FIH) should be carried aboard the aircraft. Check the "Table of Contents" on the front cover for emergency and two-way radio failure procedures. These procedures should be reviewed regularly and are contained in the FIH for ready use when needed in an actual two-way radio failure emergency.

811. EMERGENCIES

If you encounter a distress or urgency condition, you can obtain assistance by contacting the ATC facility in whose area of responsibility the aircraft is operating by simply stating the nature of the difficulty, your intentions, and assistance desired.

Minimum/Emergency Fuel

Minimum fuel is an advisory term indicating that an aircraft's fuel supply has reached a state in which, upon reaching the destination, the aircraft can accept little or no delay. This condition is not an emergency situation but merely indicates that an emergency situation is possible should any undue delay occur. Emergency fuel indicates that you need assistance, such as priority handling, and should be handled as discussed later in this lesson.

Advising ATC of Aircraft Emergencies

You should take the following action to obtain assistance if you are in any distress or urgency condition.

1. If under positive radar control (or in an environment that requires a specific squawk) maintain codes as previously set.

2. In situations other than (1) above: Switch to Mode 3/A, code 7700.

Transmit a distress or urgency message consisting of as many as necessary of the following elements, preferably in the order listed:

1. If distress, MAYDAY, MAYDAY, MAYDAY; if urgency, PAN-PAN, PAN-PAN, PAN-PAN

2. Name of station addressed

3. Aircraft identification and type

4. Nature of distress or urgency

5. Weather

6. Pilot's intention (bailout, ditching, crash landing, etc.) and request (fix, steer, escort, etc.)

7. Present position and heading or, if lost, last known position, time, and heading since that position

8. Altitude or flight level

9. Fuel remaining in hours and minutes

10. Number of people on board

11. Any other useful information

After establishing radio contact, comply with advice and instructions received. Cooperate. Do not hesitate to ask questions or clarify instructions when you do not understand or if you cannot comply with clearance. Help the ground station to control communications on the frequency in use. Silence interfering radio stations. Do not change frequency or change to another ground station unless absolutely necessary. If you do so, advise the ground station of the new frequency and station name prior to the change, transmitting in the blind if necessary. If two-way communications cannot be established on the new frequency, return immediately to the frequency or station where two-way communications last existed.

CHAPTER NINE
COURSE SUMMATION

900. SUMMATION QUESTIONS

THE FOLLOWING QUESTIONS MAY BE USED BY THE INSTRUCTOR TO PROMOTE DISCUSSION:

1. Which of the following statements are true of Flight Service Stations?

   a. They will relay IFR position reports in the event ARTCC cannot be contacted.

   b. They provide general services to aircraft.

   c. They usually can be contacted on 255.4 MHz by military aircraft.

   d. They are normally located at airfields.

   e. All of the above.

2. Immediately after takeoff on an IFR flight plan, a pilot would expect to contact _____ for further instruction.

3. What are the primary differences between a warning area and a restricted area?
_____

4. Detailed information on special use airspace can be found in_____.

5. Above 10,000 feet MSL, an IFR flight plan must be filed if you are unable to maintain cloud clearance of _____ feet over, _____ feet under, and _____ horizontally, and a visibility of at least _____.

6. Aircraft will not be operated at a speed in excess of 250 knots IAS below an altitude of _____ feet MSL.

7. Navy takeoff minimums with a standard instrument rating for non precision approaches are no lower than _____ ceiling and _____ visibility.

8. Navy takeoff minimums with a standard instrument rating for precision approaches are no lower than _____ ceiling and _____ visibility.

9. ATC requires a report when the cruising airspeed changes by _____ % or _____ knots, whichever is greater, from that given in the flight plan.

10. In order to fly VFR below 10,000 feet MSL within controlled airspace, visibility must be _____ and a distance of _____ below, _____ above, and _____ horizontal distance from clouds must be maintained.

11. When can a single-piloted aircraft (with intentions to land) begin an approach when the weather is reported to be below published approach minimums?_____

12. The VOR frequency range is from _____ to _____ MHz.

13. To monitor GUARD, the function switch on the UHF radio must be in the _____ position.

14. The frequency 115.9 could be tuned on the _____ radio.

15. If a pilot enroute desires to change the filed destination or route during an IFR flight he should contact

a. FSS.
b. ARTCC.
c. Departure Control.

16. A pilot enroute on an IFR flight will report the loss of a VOR radio to _____.

a. ARTCC
b. FSS
c. Approach Control
d. All the above

17. When navigating with TACAN equipment, station passage is identified by_____.

18. Because of the large cone of confusion over the TACAN station, a _____ and _____ must be used to designate a holding fix.

19. After a pilot has received his IFR clearance, he will usually receive a _____ clearance from tower.

20. A DD 175 is a request for clearance, but is not a clearance to fly under IFR conditions in controlled airspace. (True/False)

21. The index for aeronautical information, which covers information on all FLIP publications, is found in FLIP GP. (True/False)

9-2 COURSE SUMMATION

22. When a pilot on an IFR flight is cleared to maintain "VFR on TOP," he/she _____ (can/cannot) enter IMC flight conditions.

23. What are the tolerances for penetrating a coastal ADIZ? Time_____, Distance _____

24. Which environment requires voice reports when entering a holding pattern? _____ (Radar/Nonradar)

25. The timing of holding pattern legs, when utilizing VOR is _____ at or below 14,000 feet and _____ above 14,000 feet. When utilizing TACAN the legs are indicated in miles.

26. In a nonradar environment, what are the compulsory voice reports associated with a nonprecision instrument approach?
1. _____

2. _____

3. _____

27. When is an alternate airfield required for an IFR flight?
_____
_____

28. An arcing approach is normally associated with which NAVAID? _____

29. An example of an initial contact with an ARTCC in a nonradar environment and t a fix (which is to be followed immediately by a position report) would be

a. "LOS ANGELES CENTER, NAVY 3E123, ESTIMATING (POSITION), (TIME), (ALTITUDE)."

b. "LOS ANGELES CENTER, NAVY 3E123."

c. "LOS ANGELES CENTER, NAVY 3E123, (POSITION), (TIME), (ALTITUDE)."

30. What does the call sign METRO refer to? _____

31. What is ATIS? _____

32. What is the radio call sign of an FSS named Gainesville? _____

THE FOLLOWING QUESTIONS REFER TO DOBBINS ARB. USE THE IFR SUPPLEMENT AND APPROACH PROCEDURES AND LOW ALTITUDE ENROUTE CHARTS.

33. What is the location identifier of Dobbins ARB? _____

34. What is the elevation of this airport? _____

35. Dobbins Tower has both UHF and VHF guard capability. (True/False)

36. Who would be your controller during a PAR/ASR approach to Dobbins ARB? _____ (Any runway)

37. What is your lowest DH for a PAR approach to Dobbins ARB? _____

38. What is the frequency of the Pilot to Metro service? _____

39. Where is the Dobbins TACAN located in relation to the field? _____

40. Is 100LL and JP-4 fuel available at Dobbins ARB? _____

41. Is oxygen available? _____

42. Who is the tie-in Flight Service Station for Dobbins ARB? _____

43. In the NAVAID section, what does the (T) after the Dobbins TACAN mean? _____

THE FOLLOWING QUESTIONS REFER TO THE TACAN RWY 23 APPROACH TO WHITING FIELD NAS (NORTH).

44. The portion of the planview that is charted to scale is shown by a _____NM ring around the _____.

45. The IAF altitude is _____ feet.

46. The ARC altitude prior to 011 Radial is _____ feet.

47. At what point in the approach can an aircraft descend below 1,700 feet? _____

48. How is the FAF identified? _____

49. Is the published altitude at the FAF a mandatory altitude? _____

50. What are the weather minimums for the straight-in approach? _____

51. What would be your MDA if the duty runway was 32? _____ What would the weather minimums be? _____

9-4 COURSE SUMMATION

52. In the aircraft, how would you identify the Missed Approach Point?
_____
_____

53. What is the touchdown zone elevation for RWY 23? _____

54. You intend to use Whiting Field, North, as an alternate airport. You plan on using the Whiting TACAN RWY 23 approach. What must the forecast weather be? (Destination above Pub mins but below 3000-3) _____

55. What is the highest obstruction on the approach plate? _____ feet _____ (AGL/MSL).

56. What is the highest obstruction at the airport? _____ feet _____ (AGL/MSL)

57. What is the Minimum Safe Altitude on the 270º R of NSE? _____

58. To execute this approach, you would expect to execute a 45º procedure turn. (True/False)

59. What types of nonprecision NAVAID approaches can you execute in a T-34?
_____, _____, and_____.

60. What type of precision approaches can be executed in the T-34? _____

61. Where are the weather minimums for approaches found? _____

62. A single-piloted T–34C has absolute approach weather minimums of _____ when executing an approach.

THE FOLLOWING QUESTIONS REFER TO THE CHART ON NEXT PAGE.

63. This chart is used to determine whether or not an _____ is required for a given flight when filing an _____ flight plan.

64. It is also used to determine what the forecast requirements for ceiling and visibility must be at your _____ for a period of _____ hour(s) before to _____ hour(s) after your ETA.

65. When an alternate is required for a T-34, _____ must be added to the published minimums for the _____ at the alternate in order to determine the weather requirements for filing purposes.

DESTINATION WEATHER ETA plus and minus one (1) hour	ALTERNATE WEATHER ETA plus and minus one (1) hour		
0—0 up to but not including published minimums	3,000 – 3 or better		
Published minimums up to but not including 3,000 -- 3 (single piloted absolute minimums 200 —1/2)	NON-PRECISION	PRECISION	
		ILS	PAR
	* Published minimums plus 300-1	Published minimums plus 200—1/2	• Published minimums plus 200—1/2
3,000 — 3 or better	No alternate required		
* In the case of single-piloted or other aircraft with only one operable UHF/VHF transceiver, radar approach minimums may not be used as the basis for selection of an alternate airfield.			

THE FOLLOWING PERTAIN TO FLIGHT PLANNING PROBLEMS:

66. New lines on the flight log are started for the following reasons:

    1. _____

    2. _____

    3. _____

    4. _____

67. Compulsory position reports are required at each end of a _____ and at _____.

68. Reserve fuel is determined by using 20 minutes at _____ or ten percent of the fuel required to fly from _____ to the _____, whichever is greater.

69. ETE to alternate is figured from destination _____ to _____ airfield.

70. NAVAIDs available for use as an IAF may be found in the _____ under the NAVAID section of the selected airport.

71. Can a single-piloted aircraft file to a destination forecasted to have zero ceiling and zero visibility at arrival time? _____ (Yes/No)

9-6 COURSE SUMMATION

THIS PAGE INTENTIONALLY LEFT BLANK

901. SUMMATION ANSWERS

1. a., b., c., d.

2. Departure Control

3. Warning area is over international waters and no prior permission is required to enter. Restricted area is over land or territorial waters and prior permission is required to enter.

4. AP/1A, 2A and 3A

5. 1000; 1000; 1 SM; 5 SM

6. 10,000

7. 300 feet; 1 SM

8. When there is an operating precision approach radar (PAR) for the duty runway the PAR published minimums may be used. However, the takeoff minimums may not be reduced below 200-½. (ILS is not considered, as the T–34C does not have ILS capability.)

9. 5; 10

10. 3SM; 500 feet; 1000 feet; 2000 feet

11. Never

12. 108.00; 117.95

13. BOTH

14. VOR

15. a.

16. d.

17. minimum DME

18. radial; DME

19. takeoff/departure

20. True

21. True

9-8 COURSE SUMMATION

22. cannot

23. 5 min; 20 NM from centerline

24. Radar and Nonradar

25. 1 minute; 1½ minutes

26. 1. Leaving altitude 2. FAF 3. missed approach

27. When weather at destination is forecast to be below 3000-3 plus or minus one hour of ETA

28. TACAN

29. c.

30. Pilot to Metro Service (PMSV)

31. **A**utomatic **T**erminal **I**nformation **S**ervice

32. Gainesville Radio

33. MGE

34. 1068 feet MSL

35. True

36. Atlanta and then Dobbins GCA (Controller for Radar Approach will be same name as airfield.)

37. 1215 feet MSL

38. 274.75 (IFR Supp or FIH)

39. Located at the field

40. No

41. Yes

42. Macon (MCN) (See Communications section IFR Supplement.)

43. Terminal (Normal anticipated interference-free service 25 NM from the NAVAID up to 12,000 feet MSL)

44. 10; NAVAID - NSE TACAN (See "Remain within 10 NM" in altitude profile.)

45. 3000 or higher

46. 1700 or higher

47. After the 011 Radial in the ARC.

48. 5 DME on the 031º Radial.

49. No, 1400 feet MSL or higher.

50. 400-1

51. 660 feet MSL; 500-1

52. .9 DME on the 031º Radial.

53. 183 feet MSL

54. 700-2

55. 645 feet; MSL

56. 312 feet; MSL

57. 2700 feet MSL

58. False

59. VOR, TACAN, VOR-DME, Localizer, LDA, SDF.

60. PAR

61. FLIP Low Altitude Instrument Approach Procedures Volumes 1 through 15. 63. Minimums section in (parenthesis) following HAT/HAA

62. 200-½ or 2400 RVR (Also remember 200' HAT is required)

63. Alternate; IFR

64. Alternate; one; one

65. 300-1; nonprecision approach

66. 1. NAVAID to NAVAID

9-10 COURSE SUMMATION

2. 6º or more course change

3. Direct leg

4. Solid triangle at a fix

67. Direct leg; solid triangles (on the charts and approach plates)

68. Maximum endurance; takeoff, destination airfield (alternate airfield)

69. IAF; alternate

70. IFR Supplement

71. Yes. An alternate must be selected which is forecasting at least 3000 and 3.

THIS PAGE INTENTIONALLY LEFT BLANK

APPENDIX A
GLOSSARY OF COMMUNICATION TERMS

ACKNOWLEDGE - Let me know that you have received my message.

ADVISE INTENTIONS - Tell me what you plan to do.

AFFIRMATIVE - Yes.

ALTITUDE RESTRICTION - An altitude or altitudes stated in the order to be flown, which must be maintained until reaching a specific point or time. Altitude restrictions may be issued by ATC because of traffic, terrain, or other airspace considerations.

BREAK - Used by controllers to indicate that parts of the same communication pertain to different aircraft; e.g., "KATT ONE ONE TURN LEFT HEADING ONE EIGHT ZERO BREAK SIX ECHO ONE TWO THREE DESCEND AND MAINTAIN FIVE THOUSAND."

BUTTON/CHANNEL - Frequencies for the local operating area that have been preset into the aircraft's radio communication equipment, making the frequencies easier to select.

CAVU - An acronym for "Ceiling and Visibility Unlimited" denoting good weather.

CLEARANCE LIMIT - The fix, point, or location to which an aircraft is cleared when issued an air traffic clearance.

CLEARANCE ON REQUEST - Used by Clearance Delivery to inform the aircrew that their clearance is being processed by ATC.

CLEARED - ATC authorization for an aircraft to perform a specific action; e.g., "DRILLER ONE FOUR THREE IS CLEARED TO LAND RUNWAY ONE THREE LEFT"

CLEARED AS FILED - Means the aircraft is cleared to proceed in accordance with the route of flight filed in the flight plan. This clearance does not include the altitude, SID, or SID transition.

CLEARED FOR THE OPTION - ATC authorization for an aircraft to make a touch-and-go, low approach, missed approach, stop-and-go, or full stop landing at the discretion of the aircrew. It is normally used in training so that an instructor can evaluate a student's performance under changing situations.

CONTACT

1. Establish communications with (followed by the name of the facility and, if appropriate, the frequency to be used).

2 A flight condition wherein the aircrew ascertains the attitude of the aircraft and navigation by visual reference to the surface.

CORRECTION - An error has been made in the transmission, and the correct version follows.

CROSS (FIX) AT (ALTITUDE) - Used by ATC when a specific altitude restriction at a specific fix is required.

CROSS (FIX) AT OR ABOVE (ALTITUDE) - Used by ATC when an altitude restriction at a specified fix is required. It does not prohibit the aircraft from crossing the fix at a higher altitude than specified; however, the higher altitude may not be one that will violate a succeeding altitude restriction or altitude assignment.

CROSS (FIX) AT OR BELOW (ALTITUDE) - Used by ATC when a maximum crossing altitude at a specific fix is required. It does not prohibit the aircraft from crossing the fix at a lower altitude; however, the aircraft must remain at or above the minimum IFR altitude.

DISCRETE FREQUENCY - A separate radio frequency for use in direct aircrew-controller communications in which ATC reduces frequency congestion by limiting the number of aircraft operating on a particular frequency at one time. Discrete frequencies are normally designated for each control sector in enroute/terminal ATC facilities. Discrete frequencies are listed in the Airport/Facility Directory and IFR Enroute Supplement.

DISREGARD - Cancel my last message.

EXECUTE MISSED APPROACH - Instructions issued to an aircrew making an instrument approach that mean continue inbound to the missed approach point and execute the missed approach procedure as described on the Instrument Approach Procedure Chart, or as previously assigned by ATC. The aircrew may climb immediately to the altitude specified in the missed approach procedure upon making a missed approach. No turns should be initiated prior to reaching the missed approach point. When conducting an ASR or PAR approach, execute the assigned missed approach procedures immediately upon receiving instruction to “execute missed approach.”

EXPECT (ALTITUDE) AT (TIME) OR (FIX) - Used under certain conditions to provide the aircrew with an altitude to be used in the event of two-way communications failure. It also provides altitude information to assist the aircrew in planning.

EXPECT FURTHER CLEARANCE (TIME)/EFC - The time an aircrew can expect to receive clearance beyond a clearance limit.

EXPEDITE - Used by ATC when prompt compliance is required to avoid development of an imminent situation.

FIX - A geographical position determined by a visual reference to the surface, by reference to one or more radio NAVAIDs, by celestial plotting, or by another navigational device.

FLY HEADING (DEGREES) - Informs the aircrew of the heading to be flown. The aircraft may have to turn to, or continue on, a specific compass direction in order to comply with the instruction. The aircraft is expected to turn in the shorter direction to the heading, unless otherwise instructed by ATC.

GLIDESLOPE/GLIDEPATH - Provides vertical guidance for aircraft during approach and landing. The glideslope/glidepath is based on the following:

1. Electronic components emitting signals which provide vertical guidance by reference to airborne instruments during instrument approach such as ILS/MLS, or

2. Visual ground aids, such as VASI, which provide vertical guidance for VFR approach or for the visual portion of an instrument approach and landing.

3. PAR (on/above/below) - Used by ATC to inform an aircraft making a PAR approach of its vertical position (elevation) relative to the descent profile. The terms "slightly" and "well" are used to describe the degree of deviation, e.g., "slightly above glidepath." Trend information is also issued with respect to the elevation of the aircraft and may be modified by the terms "rapidly" and "slowly," e.g., "well above glidepath, coming down rapidly."

GO AHEAD - Proceed with your message. Not to be used for any other purpose.

GO AROUND - Instructions for an aircraft to abandon the approach to landing. Additional instructions may follow. Unless otherwise advised by ATC, a VFR aircraft or an aircraft conducting a visual approach should overfly the runway while climbing to traffic pattern altitude and enter the traffic pattern via the crosswind leg. An aircraft on an IFR flight plan making an instrument approach should execute the published missed approach procedure or proceed as instructed by ATC.

GUARD - Universal emergency frequency (243.0 or 121.5 MHz).

HOW DO YOU HEAR ME? - A question relating to the quality of the transmission or to how well the transmission is being received.

IDENT - A request for the aircrew to activate the aircraft transponder identification feature. This action will help the controller to confirm an aircraft's identity or to identify an aircraft

IMMEDIATELY - Used by ATC when such action is required to avoid an imminent situation.

INOPERATIVE - Used to describe a piece of equipment which does not function properly.

INTERCEPT - To meet or cross.

LAST ASSIGNED ALTITUDE - The last assigned altitude/flight level assigned by ATC and acknowledged by the aircrew.

LEAVING – To depart an altitude/flight level at which you were level.

MAINTAIN -

1. Concerning altitudes/flight levels, the term means to remain at the altitude/flight level specified. The phrase "climb and" or "descend and" normally precedes "maintain" and the altitude assignment; e.g., "descend and maintain 5000."

2. Concerning other ATC instructions, the term is used in its literal sense; e.g., maintain VFR.

MINIMUM FUEL - Indicates that an aircraft's fuel supply has reached a state where, upon reaching the destination, it can accept little or no delay. This is not an emergency situation but merely indicates that an emergency situation is possible should any undue delay occur.

MISSED APPROACH -

1. A maneuver conducted by an aircraft when an instrument approach cannot be completed to a landing. The route of flight and altitude are shown on the Instrument Approach Procedure Chart. An aircraft executing a missed approach prior to the Missed Approach Point (MAP) must continue along the final approach to the MAP. The aircraft may climb immediately to the altitude specified in the missed approach procedure.

2. A term used by the aircrew to inform ATC that a missed approach is being executed.

3. At locations where ATC radar service is provided, the aircrew should conform to radar vectors, when provided by ATC, in lieu of the published missed approach procedure.

NEGATIVE - "No" or Permission not granted" or "That is not correct."

NEGATIVE NUMBERS - Used to indicate that the aircrew does not have the current weather and landing information.

NO JOY - Used by the aircrew to indicate that they were unable to communicate with an ATC facility on the assigned frequency.

NORDO - Non-radio-equipped aircraft Not to be used to designate aircraft which have radio failure.

PASSING - Climbing or descending through an altitude/flight level.

PILOT'S DISCRETION - When used in conjunction with altitude assignments, this term means that ATC has offered the aircrew the option of starting a climb or descent when desired and conducting the climb or descent at any rate. However, once the altitude has been vacated, the aircraft may not return to that altitude.

READ BACK - Repeat my message to me.

A-4 GLOSSARY OF COMMUNICATION TERMS

RECYCLE - Indicates that ATC is not properly receiving your transponder and that you should reset the code or turn it off and back on again.

REPORT - Used to instruct aircrews to advise ATC of specified information; e.g., "REPORT PASSING HAMILTON VOR."

REQUEST - To ask for.

ROGER - I have received all of your last transmission. It should not be used to answer a question requesting a yes or no answer.

RTB - An acronym for "Return(ing) to Base."

SAY AGAIN - Used to request a repeat of the last transmission. Usually specifies transmission or portion thereof not understood or received; e.g., "SAY AGAIN ALL AFTER ABRAM VOR."

SAY ALTITUDE - Used by ATC to ascertain an aircraft's specific altitude/flight level. When the aircraft is climbing or descending, the aircrew should state the indicated altitude rounded to the nearest 100 feet.

SAY HEADING - Used by ATC to request an aircraft heading. The aircrew should state the actual heading of the aircraft

SEARCH AND RESCUE (SAR) - A service which seeks missing aircraft and assists those found to be in need of assistance. It is a cooperative effort using the facilities and services of available federal, state, and local agencies.

SPEAK SLOWER - Used in verbal communications as a request to reduce speech rate.

SQUAWK (MODE, CODE, FUNCTION) - Activate specific modes/codes/functions on the aircraft transponder; e.g., "SQUAWK THREE/ALPHA, TWO ONE ZERO FIVE, LOW."

STAND BY - Means the controller or aircrew must pause for a few seconds, usually while the other attends to other duties of a higher priority. Also means to wait as in "stand by for clearance." The caller should reestablish contact if a delay is lengthy. "Stand by" is not an approval or denial.

STEREO ROUTE - A routinely used route of flight established by users and ARTCCs identified by a coded name, e.g., ALPHA 2. These routes minimize flight plan handling and communications.

SWITCHING - A response to an ATC request to change radio frequencies and/or controllers.

TRAFFIC - A term used by ATC to refer to one or more aircraft.

TRAFFIC IN SIGHT - Used by aircraft to inform a controller that previously issued traffic is in sight.

UNABLE - Indicates inability to comply with a specific instruction, request, or clearance.

VECTOR - A heading issued to an aircraft to provide navigational guidance by radar.

VERIFY - Request confirmation of information; e.g., "VERIFY ASSIGNED ALTITUDE."

WHEN ABLE - When used in conjunction with ATC instructions, gives the aircrew the latitude to delay compliance until a condition or event has been reconciled. Unlike for "pilot discretion," when instructions are prefaced with "when able," the aircrew is expected to seek the first opportunity to comply. Once a maneuver has been initiated, the aircrew is expected to continue until the specifications of the instruction have been met. "When able" should not be used when expeditious compliance is required.

WILCO - I have received your message, understand it, and will comply with it.