NAVAIR 01-H57BC-1

NATOPS FLIGHT MANUAL

NAVY MODEL

TH-57B/C HELICOPTER

THIS PUBLICATION SUPERSEDES NAVAIR 01-H57BC-1 DATED 15 JANUARY 2010.

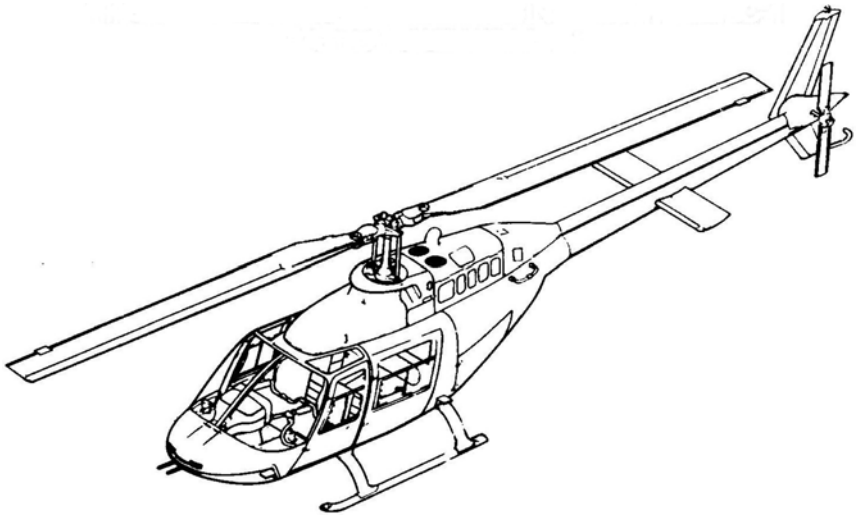

DISTRIBUTION STATEMENT C — Distribution authorized to U.S. Government agencies and their contractors to protect publications required for official use or for administrative or operational purposes only, determined on 15 August 2012. Other requests for this document shall be referred to Commander, Naval Air Systems Command (PMA-273), 22581 Saufley Rd, Bldg 3258, Patuxent River, MD 20670.

DESTRUCTION NOTICE — For unclassified, limited documents, destroy by any method that will prevent disclosure of contents or reconstruction of the document.

ISSUED BY AUTHORITY OF THE CHIEF OF NAVAL OPERATIONS AND
UNDER THE DIRECTION OF THE COMMANDER,
NAVAL AIR SYSTEMS COMMAND.

THE AIRCRAFT 1

INDOCTRINATION 2

NORMAL PROCEDURES 3

FLIGHT CHARACTERISTICS 4

EMERGENCY PROCEDURES 5

ALL-WEATHER OPERATIONS 6

COMM/NAVIGATION PROCEDURES 7

WEAPON SYSTEMS 8

FLIGHTCREW COORDINATION 9

NATOPS EVALUATION 10

PERFORMANCE DATA 11

INDEX

0801LP1128330

15 AUGUST 2012

DEPARTMENT OF THE NAVY
NAVAL AIR SYSTEMS COMMAND
RADM WILLIAM A. MOFFETT BUILDING
47123 BUSE ROAD, BLDG 2272
PATUXENT RIVER, MARYLAND 20670-1547

15 August 2012

LETTER OF PROMULGATION

1. The Naval Air Training and Operating Procedures Standardization (NATOPS) Program is a positive approach toward improving combat readiness and achieving a substantial reduction in the aircraft mishap rate. Standardization, based on professional knowledge and experience, provides the basis for development of an efficient and sound operational procedure. The standardization program is not planned to stifle individual initiative, but rather to aid the Commanding Officer in increasing the unit's combat potential without reducing command prestige or responsibility.

2. This manual standardizes ground and flight procedures but does not include tactical doctrine. Compliance with the stipulated manual requirements and procedures is mandatory except as authorized herein. In order to remain effective, NATOPS must be dynamic and stimulate rather than suppress individual thinking. Since aviation is a continuing, progressive profession, it is both desirable and necessary that new ideas and new techniques be expeditiously evaluated and incorporated if proven to be sound. To this end, Commanding Officers of aviation units are authorized to modify procedures contained herein, in accordance with the waiver provisions established by OPNAV Instruction 3710.7, for the purpose of assessing new ideas prior to initiating recommendations for permanent changes. This manual is prepared and kept current by the users in order to achieve maximum readiness and safety in the most efficient and economical manner. Should conflict exist between the training and operating procedures found in this manual and those found in other publications, this manual will govern.

3. Checklists and other pertinent extracts from this publication necessary to normal operations and training should be made and carried for use in naval aircraft.

4. Per NAVAIRINST 13034.1 series, this flight clearance product provides NAVAIR airworthiness certification subsequent to design engineering review. It does not authorize aircraft system modification, nor does it satisfy NAVAIR requirements for configuration management. Refer to OPNAVINST 4790.2 series for policy guidance on configuration management and modification authority.

Approved

R. L. MAHR
Rear Admiral, United States Navy
By direction of
Commander, Naval Air Systems Command

INTERIM CHANGE SUMMARY

The following Interim Changes have been cancelled or previously incorporated into this manual.

INTERIM CHANGE NUMBER(S)	REMARKS/PURPOSE
1 thru 16	Previously incorporated.

The following Interim Changes have been incorporated into this Change/Revision.

INTERIM CHANGE NUMBER(S)	REMARKS/PURPOSE
17	Operating Torque Limitations
18	Hydraulics Check Advance Change
19	N_f Limitations
20	Deceleration Check
21	Vibration Check

Interim Changes Outstanding — To be maintained by the custodian of this manual.

INTERIM CHANGE NUMBER	ORIGINATOR/DATE (or DATE/TIME GROUP)	PAGES AFFECTED	REMARKS/PURPOSE

Summary of Applicable Technical Directives

Information relating to the following recent technical directives has been incorporated into this manual.

CHANGE NUMBER	DESCRIPTION	DATE INC. IN MANUAL	VISUAL IDENTIFICATION

Information relating to the following applicable technical directives will be incorporated in a future change.

CHANGE NUMBER	DESCRIPTION	DATE INC. IN MANUAL	VISUAL IDENTIFICATION

RECORD OF CHANGES

Record entry and page count verification for each printed change and erratum:

Change No. and Date of Change	Date of Entry	Page Count Verified by (Signature)

LIST OF EFFECTIVE PAGES

Effective Pages	Page Numbers
Original	1 (Reverse Blank)
Original	3 (Reverse Blank)
Original	5 (Reverse Blank)
Original	7 (Reverse Blank)
Original	9 (Reverse Blank)
Original	11 (Reverse Blank)
Original	13 thru 39 (Reverse Blank)
Original	41 thru 45 (Reverse Blank)
Original	47 (Reverse Blank)
Original	1-1 thru 1-5 (Reverse Blank)
Original	2-1 thru 2-49 (Reverse Blank)
Original	3-1 thru 3-8
Original	4-1 thru 4-13 (Reverse Blank)
Original	49 (Reverse Blank)
Original	5-1 thru 5–6
Original	51 (Reverse Blank)
Original	6-1 thru 6-6
Original	7-1 thru 7-29 (Reverse Blank)
Original	8-1 thru 8–10
Original	9-1 thru 9-10
Original	10-1 thru 10–20
Original	53 (Reverse Blank)
Original	11-1 thru 11-11 (Reverse Blank)
Original	55 (Reverse Blank)

Effective Pages	Page Numbers
Original	12-1 thru 12-4
Original	13-1 thru 13-2
Original	14-1 thru 14-30
Original	15-1 thru 15–2
Original	16-1 thru 16–6
Original	57 (Reverse Blank)
Original	17-1 thru 17-14
Original	59 (Reverse Blank)
Original	18-1 thru 18-22
Original	61 (Reverse Blank)
Original	19-1 (Reverse Blank)
Original	63 (Reverse Blank)
Original	20-1 thru 20–11 (Reverse Blank)
Original	65 (Reverse Blank)
Original	21-1 thru 21–18
Original	67 (Reverse Blank)
Original	22-1 thru 22–2
Original	23-1 thru 23–10
Original	24-1 thru 24–6
Original	25-1 thru 25–6
Original	26-1 thru 26–18
Original	27-1 thru 27–2
Original	28-1 thru 28–3 (Reverse Blank)
Original	29-1 thru 29–5 (Reverse Blank)
Original	Index–1 thru 23 (Reverse Blank)

NATOPS Flight Manual

TH-57B/C

CONTENTS

Page No.

PART I — THE AIRCRAFT

CHAPTER 1 — GENERAL DESCRIPTION

1.1 THE HELICOPTER 1-1

1.2 SPEED RANGE 1-1

1.3 TAKEOFF GROSS WEIGHT 1-1

1.4 HELICOPTER ARRANGEMENT 1-1

CHAPTER 2 — SYSTEMS

2.1 POWERPLANT 2-1
2.1.1 Engine Anti-Icing System 2-1
2.1.2 Twist Grip (Throttle) 2-3
2.1.3 Turbine Power Control 2-4
2.1.4 Overspeed Control 2-4
2.1.5 Fuel Control 2-4
2.1.6 Engine Instruments and Indicators 2-4

2.2 OIL SUPPLY SYSTEM 2-11
2.2.1 Engine Oil Temperature Gauge 2-11
2.2.2 Engine Oil Pressure Gauge 2-11
2.2.3 Airframe-Mounted Oil Filter System 2-13

2.3 DRIVE TRAIN 2-13
2.3.1 Engine to Transmission Drive 2-13

2.4 FREEWHEELING UNIT 2-13

2.5 ROTOR SYSTEM 2-13
2.5.1 Main Rotor 2-13
2.5.2 Tail Rotor 2-14
2.5.3 Tail Rotor Drive 2-14
2.5.4 Rotor Rpm Indicator 2-14
2.5.5 Rotor Brake (C) 2-14

Page No.

2.6 TRANSMISSION SYSTEM 2-14
2.6.1 Transmission Oil System 2-14

2.7 TAIL ROTOR GEARBOX 2-17

2.8 FUEL SUPPLY SYSTEM 2-17
2.8.1 Airframe-Mounted Fuel Filter 2-17
2.8.2 Fuel Quantity Indicator 2-17
2.8.3 Fuel Pressure Indicator 2-20
2.8.4 Fuel Pump Caution Light 2-20

2.9 ELECTRICAL POWER SYSTEM 2-20
2.9.1 TH-57B General Description 2-20
2.9.2 TH-57C General Description 2-20
2.9.3 Voltage Regulator 2-20
2.9.4 Starter-Generator System 2-25
2.9.5 Standby Generator (C) 2-25
2.9.6 Battery Switch 2-25
2.9.7 Dc Loadmeter 2-25
2.9.8 Dc Voltmeter (B) 2-25
2.9.9 TH-57C Ac and Dc Voltmeter 2-25
2.9.10 Circuit Breaker Panel 2-25
2.9.11 Battery 2-25
2.9.12 Inverters (C) 2-26
2.9.13 Dc External Power Start Receptacle 2-26

2.10 HYDRAULIC POWER SUPPLY SYSTEM 2-26
2.10.1 Flight Control Servo Units 2-28
2.10.2 Hydraulic Control Switch 2-28

2.11 FLIGHT CONTROL SYSTEM 2-28
2.11.1 Collective Pitch Control Lever 2-30
2.11.2 Cyclic Pitch Control Stick 2-30
2.11.3 Directional Control Pedals 2-30
2.11.4 Force Trim System 2-31

2.12 MINISTAB FLIGHT CONTROL SYSTEM (C) 2-31
2.12.1 System Operational Description 2-31
2.12.2 AFCS Controller 2-31
2.12.3 Trim Damper Units 2-32
2.12.4 Computer 2-32
2.12.5 Control Tube/Actuator Assemblies 2-32
2.12.6 Air Data Computer 2-35

Page No.

2.13 LANDING GEAR SYSTEM 2-35

2.14 TAILBOOM 2-35

2.15 HORIZONTAL STABILIZER 2-35

2.16 VERTICAL FIN 2-35

2.17 TAIL SKID 2-35

2.18 INSTRUMENTS 2-35
2.18.1 Pitot Static System (C) 2-35
2.18.2 Pitot Static System (B) 2-36
2.18.3 Altimeters 2-36
2.18.4 Airspeed Indicator 2-36
2.18.5 Instantaneous Vertical Speed Indicator (C) 2-36
2.18.6 Vertical Speed Indicator (B) 2-36
2.18.7 Turn-and-Slip Indicators 2-36
2.18.8 Magnetic-Compass (Standby) 2-36
2.18.9 Compass Heading System 2-36
2.18.10 Radar Altimeters 2-37

2.19 EMERGENCY EQUIPMENT 2-40
2.19.1 Caution Panel 2-40
2.19.2 Chip Detector System 2-43
2.19.3 Chip Detector Warning Lights 2-43
2.19.4 Fire Detector System 2-43
2.19.5 Engine Failure Warning System 2-43
2.19.6 Rotor Rpm Warning System 2-43

2.20 FREE AIR TEMPERATURE BULB 2-44

2.21 LIGHTING EQUIPMENT 2-44
2.21.1 Exterior Lights 2-44
2.21.2 Interior Lights 2-46

2.22 ENVIRONMENTAL CONTROL SYSTEM 2-46

2.23 VENTILATING SYSTEM 2-46

2.24 PITOT HEATER 2-48
2.24.1 Pitot Heater Operation 2-48

2.25 ENTRANCE/EGRESS 2-48

2.26 PILOT AND COPILOT SEATS 2-48
2.26.1 Shoulder Harness 2-48

Page No.

2.27 PASSENGER SEATS 2-48

2.28 MISCELLANEOUS EQUIPMENT 2-48
2.28.1 Fire Extinguisher 2-48
2.28.2 First-Aid Kits 2-48
2.28.3 Data Cases 2-48
2.28.4 Mooring Fittings 2-49
2.28.5 Tow Rings 2-49
2.28.6 Ground Handling Wheels 2-49
2.28.7 Rotor Tiedown 2-49
2.28.8 Exhaust Duct Cover 2-49
2.28.9 Pitot Covers and Intake Plugs 2-49
2.28.10 Ashtrays 2-49

CHAPTER 3 — SERVICE AND HANDLING

3.1 FUELING AND SERVICING 3-1
3.1.1 Crew and Truck 3-1
3.1.2 Grounding 3-1
3.1.3 Electrical Hazard 3-1
3.1.4 Static Differential 3-1
3.1.5 Attaching Wire Clamp 3-1
3.1.6 Fire Extinguishers and Attendant 3-1
3.1.7 Maintenance Step 3-5
3.1.8 Installation and Removal of Ground Handling Wheels 3-5

3.2 SERVICING GUIDELINES 3-7
3.2.1 Servicing Engine Oil System 3-7
3.2.2 Servicing Transmission Oil System 3-7
3.2.3 Servicing Hydraulic System 3-8

CHAPTER 4 — OPERATING LIMITATIONS

4.1 INTRODUCTION 4-1

4.2 INSTRUMENT MARKINGS 4-1

4.3 ENGINE LIMITATIONS 4-1
4.3.1 N_f Rpm 4-1
4.3.2 N_g Rpm 4-1
4.3.3 Engine Oil Pressure 4-1
4.3.4 Engine Oil Temperature 4-2
4.3.5 Turbine Outlet Temperature 4-2

4.4 ROTOR LIMITATIONS 4-7

Page No.

4.5 TRANSMISSION OIL SYSTEM LIMITS 4-7

4.6 TORQUE 4-7

4.7 FUEL PRESSURE (INDICATED) 4-7

4.8 STANDBY GENERATOR LIMITATIONS (C) 4-7

4.9 ROTOR BRAKE LIMITATIONS 4-7

4.10 STARTER LIMITATIONS 4-7

4.11 AIRSPEED LIMITS 4-8

4.12 ALTITUDE LIMITATIONS 4-8

4.13 CLIMB/DESCENT LIMITS 4-9

4.14 ACCELERATION LIMITS 4-9

4.15 WEIGHT LIMITATIONS 4-9

4.16 WEIGHT AND CENTER-OF-GRAVITY LIMITS 4-9
4.16.1 Longitudinal Center-of-Gravity Limits 4-11

4.17 MINIMUM CREW REQUIREMENTS 4-11

4.18 REQUIRED EQUIPMENT FOR IMC FLIGHT 4-11

4.19 PROHIBITED OPERATIONS 4-11

4.20 PROHIBITED MANEUVERS 4-12

4.21 REQUIRED EQUIPMENT FOR NIGHT FLIGHT 4-12

4.22 REQUIRED EQUIPMENT FOR OVER WATER AND SHIPBOARD OPERATIONS 4-12

PART II — INDOCTRINATION

CHAPTER 5 — INDOCTRINATION

5.1 INTRODUCTION 5-1

5.2 GROUND TRAINING SYLLABUS 5-1
5.2.1 Pilot Ground Training 5-1
5.2.2 Aircrew Ground Training 5-1

5.3 FLIGHT TRAINING SYLLABUS 5-1
5.3.1 Pilot Flight Training 5-2
5.3.2 Aircrew Flight Training 5-2

Page No.

5.4 FLIGHTCREW DESIGNATION, QUALIFICATIONS, AND REQUIREMENTS 5-2
5.4.1 Designation 5-2
5.4.2 Designating Authority 5-2
5.4.3 Qualifications 5-2
5.4.4 Currency 5-6

5.5 PERSONAL FLYING EQUIPMENT 5-6
5.5.1 All Flights 5-6
5.5.2 Extended Overwater Flights 5-6
5.5.3 Night and Instrument Flights 5-6

PART III — NORMAL PROCEDURES

CHAPTER 6 — FLIGHT PREPARATION

6.1 MISSION PLANNING 6-1
6.1.1 Introduction 6-1
6.1.2 Factors Affecting Helicopter Performance 6-1
6.1.3 Weight and Balance 6-2
6.1.4 General Precautions 6-2
6.1.5 Fuel 6-2
6.1.6 Briefing 6-2
6.1.7 Debriefing 6-6

CHAPTER 7 — SHORE-BASED PROCEDURES

7.1 INTRODUCTION 7-1

7.2 SCHEDULING 7-1

7.3 GROUND OPERATIONS 7-1
7.3.1 Preflight Inspection 7-1
7.3.2 Fireguard 7-1
7.3.3 Helicopter Acceptance 7-1

7.4 DISCREPANCY REPORTING 7-2

7.5 EXTERIOR INSPECTION 7-2

7.6 PREFLIGHT INSPECTION 7-2
7.6.1 Aircraft 7-2
7.6.2 Cockpit 7-2
7.6.3 Forward Fuselage (Right Side) 7-6
7.6.4 Upper Forward Cowling Access Door (Right Side) 7-6
7.6.5 Transmission Access Door (Right Side) 7-6

Page No.

7.6.6 Engine Compartment (Right Side) 7-7
7.6.7 Aft Fuselage (Right Side) 7-7
7.6.8 Tailboom (Right Side) 7-8
7.6.9 Tail Rotor 7-8
7.6.10 Tailboom (Left Side) 7-9
7.6.11 Aft Fuselage (Left Side) 7-9
7.6.12 Engine Compartment (Left Side) 7-9
7.6.13 Transmission Access Door (Left Side) 7-10
7.6.14 Upper Fuselage Area 7-10
7.6.15 Rotor System 7-11
7.6.16 Upper Forward Cowling Access Door (Left Side) 7-11
7.6.17 Forward Fuselage (Left Side) 7-11
7.6.18 Fuselage (Front Section) 7-12

7.7 PRESTART 7-12

7.8 WASH 7-14

7.9 START 7-14

7.10 PRETAKEOFF 7-16

7.11 HYDRAULICS CHECK 7-20

7.12 TAKEOFF CHECKLIST 7-20

7.13 TYPES OF TAKEOFF 7-21
7.13.1 Vertical Takeoff to Hover 7-21
7.13.2 No-Hover Takeoff 7-21
7.13.3 Maximum Power Takeoff 7-21
7.13.4 Confined Area Takeoff 7-21
7.13.5 Crosswind Takeoff 7-21
7.13.6 Maximum Load Takeoff 7-21

7.14 INSTRUMENT FLIGHT CHECKLIST 7-22

7.15 AIR TAXIING 7-22

7.16 CLIMB 7-22
7.16.1 Level-Off Checklist 7-23

7.17 CRUISE 7-23

7.18 DESCENT 7-23

Page No.

7.19 TYPES OF APPROACHES 7-23
7.19.1 Normal Approach 7-23
7.19.2 Steep Approach 7-25

7.20 TYPES OF LANDINGS 7-25
7.20.1 Vertical Landing from a Hover 7-25
7.20.2 No-Hover Landing 7-25
7.20.3 Sliding Landing 7-25
7.20.4 Confined Area Landing 7-26

7.21 WAVEOFF 7-26

7.22 LANDING CHECKLIST 7-26

7.23 HOT REFUELING/HOT SEATING 7-26
7.23.1 Hot Refuel Checklist 7-26
7.23.2 Post-Refuel/Hot Seat Checklist 7-26

7.24 ENVIRONMENTAL CONTROL SYSTEM 7-27
7.24.1 Cabin Cooling 7-27
7.24.2 Cabin Heat 7-27
7.24.3 Cabin Defogging 7-27

7.25 SHUTDOWN 7-28
7.25.1 Shutdown Checklist 7-28

7.26 POSTFLIGHT EXTERNAL INSPECTION 7-29

CHAPTER 8 — SHIPBOARD PROCEDURES

8.1 INTRODUCTION 8-1

8.2 QUALIFICATION AND CURRENCY REQUIREMENTS 8-1
8.2.1 Air-Capable Ship Qualification 8-1

8.3 BRIEFING 8-2

8.4 HANGAR AND FLIGHT DECK OPERATIONS 8-3
8.4.1 Securing the Aircraft 8-3
8.4.2 Precautions in Movement of Helicopters 8-3
8.4.3 Flight Deck Operations 8-4
8.4.4 Preflight/Postflight 8-4

8.5 LANDING SIGNALMAN ENLISTED 8-4

Page No.

8.6 NIGHT OPERATIONS 8-4
8.6.1 Preflight/Postflight 8-4
8.6.2 Taxi and Operations 8-4

8.7 EMERGENCY PROCEDURES 8-4

8.8 AIR-CAPABLE SHIP OPERATIONS 8-5
8.8.1 Field Deck Landing Practice 8-5
8.8.2 Relative Winds 8-5
8.8.3 Launch Procedures 8-5
8.8.4 Recovery Procedures 8-10

CHAPTER 9 — SPECIAL PROCEDURES

9.1 PRACTICE AUTOROTATIONS 9-1
9.1.1 Power Recovery Autorotation 9-1
9.1.2 Full Autorotation 9-2
9.1.3 Low Rpm Recovery 9-4
9.1.4 Instrument Autorotation 9-4

9.2 SIMULATED ENGINE FAILURES 9-5
9.2.1 Hover 9-5
9.2.2 Air Taxi 9-5

9.3 FORMATION FLIGHT 9-5
9.3.1 Introduction 9-5
9.3.2 Elements of a Formation 9-5
9.3.3 Basic Formations 9-5
9.3.4 Rendezvous 9-8
9.3.5 Formation Takeoffs and Landings 9-8
9.3.6 Responsibilities 9-8

9.4 TACTICAL OPERATIONS 9-8
9.4.1 Tactical Maneuvers 9-8
9.4.2 Tactical Approaches 9-8

9.5 UNAIDED NIGHT OPERATIONS 9-9

9.6 NIGHT VISION DEVICE UTILIZATION 9-9
9.6.1 General 9-9
9.6.2 NVD Physiology 9-9
9.6.3 NVD Operations 9-10
9.6.4 NVD Crew Brief 9-10
9.6.5 NVD Briefing Guide 9-10

Page No.

CHAPTER 10 — FUNCTIONAL CHECKFLIGHT PROCEDURES

10.1 GENERAL 10-1
10.1.1 Check Pilot Qualification 10-1
10.1.2 Conditions Requiring Functional Checkflights 10-1

10.2 PROCEDURES 10-2

10.3 GROUNDCHECKS 10-3

10.4 HOVER CHECKS 10-9

10.5 FLIGHT CHECKS 10-13

PART IV — FLIGHT CHARACTERISTICS

CHAPTER 11 — FLIGHT CHARACTERISTICS

11.1 INTRODUCTION 11-1

11.2 LEVEL FLIGHT CHARACTERISTICS AT VARIOUS SPEEDS 11-1

11.3 MANEUVERING FLIGHT 11-1

11.4 LOW-g MANEUVERING 11-1
11.4.1 Recovery Procedure 11-2

11.5 MAST BUMPING 11-2
11.5.1 Recovery Procedure 11-3

11.6 VORTEX RING STATE 11-3
11.6.1 Recovery Procedure 11-3

11.7 POWER REQUIRED EXCEEDS POWER AVAILABLE 11-3
11.7.1 Recovery Procedure 11-4

11.8 DYNAMIC ROLLOVER CHARACTERISTICS 11-4
11.8.1 Dynamic Rollover 11-4
11.8.2 Slope Landings and Takeoffs 11-6
11.8.3 Crosswind Landings and Takeoffs 11-6
11.8.4 Recovery Procedure 11-6

11.9 ROTOR BLADE STALL 11-6
11.9.1 Recovery Procedure 11-7

11.10 LOSS OF TAIL ROTOR EFFECTIVENESS (UNANTICIPATED RIGHT YAW) 11-7
11.10.1 Weathercock Stability (120° to 240°) 11-7
11.10.2 Tail Rotor Vortex Ring State (210° to 330°) 11-7

Page No.

11.10.3 Main Rotor Disk Vortex (285° to 315°) 11-7
11.10.4 Loss of Translational Lift 11-9
11.10.5 Loss of Tail Rotor Effectiveness 11-9
11.10.6 Recovery Procedure 11-9

11.11 LOSS OF TAIL ROTOR AUTHORITY 11-10

11.12 CONTROL FEEDBACK 11-10

11.13 ROTOR DROOP 11-10

11.14 VIBRATION IDENTIFICATION 11-10
11.14.1 Low-Frequency Vibrations 11-10
11.14.2 Medium-Frequency Vibrations 11-11
11.14.3 High-Frequency Vibrations 11-11
11.14.4 Recovery Procedure 11-11

PART V — EMERGENCY PROCEDURES

CHAPTER 12 — EMERGENCY PROCEDURES

12.1 INTRODUCTION 12-1

12.2 SPECIAL INSTRUCTIONS 12-1
12.2.1 Definition of Landing Terms 12-1
12.2.2 Precautionary Landings 12-1
12.2.3 Memory Items 12-1

CHAPTER 13 — GROUND EMERGENCIES

13.1 EMERGENCY SHUTDOWN 13-1

13.2 ABORT START 13-1

13.3 POST SHUTDOWN FIRE (INTERNAL) 13-2

CHAPTER 14 — IN-FLIGHT EMERGENCIES

14.1 ENGINE FAILURE 14-1
14.1.1 Engine Failure In Flight 14-2
14.1.2 Engine Failure at High Airspeed and Low Altitude 14-2

14.2 OVERTORQUE/OVERSPEED/OVERTEMP 14-2

14.3 COMPRESSOR STALL 14-2

14.4 UNDERSPEEDING N_f/N_r 14-4

14.5 POWER REQUIRED EXCEEDS POWER AVAILABLE 14-5

Page No.

14.6 DYNAMIC ROLLOVER 14-5

14.7 ENGINE OVERSPEED (N_f) ROTOR RPM (N_r) 14-6

14.8 FUEL CONTROL FAILURE 14-6

14.9 ENGINE RESTART IN FLIGHT 14-6

14.10 MAIN DRIVE SHAFT FAILURE 14-7

14.11 SPRAG CLUTCH SLIPPAGE 14-8

14.12 SPRAG CLUTCH SEIZURE 14-8

14.13 IMMINENT TRANSMISSION FAILURE 14-9

14.14 ENGINE FIRE IN FLIGHT 14-9

14.15 FUSELAGE FIRE 14-10

14.16 FUEL BOOST PUMP FAILURE 14-10

14.17 SUSPECTED FUEL LEAKAGE 14-11

14.18 MAST BUMPING 14-12

14.19 MAIN GENERATOR FAILURE 14-12

14.20 STANDBY GENERATOR FAILURE (C) 14-14

14.21 INVERTER FAILURE (C) 14-14
14.21.1 FCS Inverter Failure (C) 14-14
14.21.2 Avionics Inverter Failure (C) 14-14

14.22 DC LOADMETER AND VOLTMETER 14-15

14.23 ELECTRICAL FIRE 14-15
14.23.1 Electrical Fire — Unknown Origin 14-15
14.23.2 Electrical Fire — Known Origin 14-16

14.24 SMOKE AND FUME ELIMINATION 14-16

14.25 HYDRAULIC SYSTEM MALFUNCTIONS 14-17
14.25.1 Hydraulic System Failure 14-17
14.25.2 Hydraulic Power Cylinder Malfunction 14-17

14.26 HIGH-FREQUENCY VIBRATION 14-18

14.27 JAMMED FLIGHT CONTROLS AND OTHER FLIGHT CONTROL MALFUNCTIONS 14-19

Page No.

14.28 UNCOMMANDED RIGHT ROLL DURING FLIGHT BELOW 1G 14-19

14.29 ROTOR BLADE STALL 14-19

14.30 VORTEX RING STATE 14-20

14.31 TAIL ROTOR FAILURE AND DIRECTIONAL CONTROL MALFUNCTIONS . . . 14-20
14.31.1 Complete Loss of Tail Rotor Thrust 14-21
14.31.2 Fixed Pitch Right Pedal (Low Power) 14-22
14.31.3 Fixed Pitch Left Pedal (High Power) 14-23
14.31.4 Loss of Tail Rotor Effectiveness 14-24

14.32 SINGLE INSTRUMENT INDICATIONS 14-24
14.32.1 N_g Tachometer or Turbine Outlet Temperature System 14-24
14.32.2 Torquemeter 14-25
14.32.3 Engine or Transmission Oil Pressures 14-25
14.32.4 Engine or Transmission Oil Temperatures 14-26
14.32.5 N_r and N_f Tachometer Malfunction 14-26
14.32.6 Pitot-Static Instruments 14-26
14.32.7 Gyro Instruments 14-26
14.32.8 Fuel Quantity Indicator 14-26

14.33 EMERGENCY DESCENT 14-27

14.34 LOST PLANE PROCEDURES 14-27

14.35 INADVERTENT ENTRY INTO INSTRUMENT METEOROLOGICAL CONDITIONS 14-27
14.35.1 Single Helicopter Inadvertent IMC Procedure 14-27
14.35.2 Two Helicopters 14-28
14.35.3 Four Helicopters 14-28

14.36 ENVIRONMENTAL CONTROL SYSTEM MALFUNCTIONS 14-28
14.36.1 Heater Malfunction 14-28

14.37 ICING 14-30

14.38 ICS/RADIO SELECTOR PANEL FAILURE 14-30

CHAPTER 15 — LANDING EMERGENCIES

15.1 AUTOROTATION 15-1
15.1.1 Landing in the Trees 15-2

CHAPTER 16 — EMERGENCY EGRESS/SURVIVAL PROCEDURES

16.1 EMERGENCY EXITS AND ENTRANCES 16-1
16.1.1 TH-57B/C Door Handles 16-1
16.1.2 TH-57B/C Door Emergency Jettisoning Handles 16-1

Page No.

16.2 EMERGENCY EGRESS 16-2
16.2.1 Emergency Ground Egress 16-2

16.3 EMERGENCY LANDING 16-2
16.3.1 Preparation for Emergency Landing 16-2
16.3.2 Emergency Landing (Pilot/Copilot) 16-3
16.3.3 Emergency Landing (Crew/Passengers) 16-3
16.3.4 Ditching 16-4
16.3.5 Underwater Egress 16-5

16.4 HELICOPTER AIRCREW BREATHING DEVICE 16-6

PART VI — ALL-WEATHER OPERATIONS

CHAPTER 17 — ALL-WEATHER OPERATIONS

17.1 INTRODUCTION 17-1

17.2 CREW MANAGEMENT 17-1
17.2.1 Duties of Flying Pilot 17-1
17.2.2 Duties of Nonflying Pilot 17-1

17.3 INSTRUMENT FLIGHT PROCEDURES 17-1
17.3.1 Required Equipment 17-1
17.3.2 Simulated Instrument Flight 17-1
17.3.3 Start 17-2
17.3.4 After Engine/Rotor Start 17-2
17.3.5 Instrument Takeoff 17-2
17.3.6 Instrument Climb 17-2
17.3.7 Instrument Cruise Flight 17-3
17.3.8 Level-Off Checklist 17-3
17.3.9 Speed Range 17-3
17.3.10 Electronic Equipment 17-3
17.3.11 Holding 17-3
17.3.12 Descent 17-3
17.3.13 Instrument Approaches 17-4
17.3.14 Instrument Autorotations 17-4
17.3.15 Lightning Strikes 17-4

17.4 RMI SLAVING PROCEDURES 17-5

17.5 COLD-WEATHER OPERATION 17-5
17.5.1 Introduction 17-5
17.5.2 Engine Servicing 17-5

Page No.

17.5.3 Preparation for Flight 17-5
17.5.4 Preheating 17-6
17.5.5 Before Starting Engine 17-6
17.5.6 Engine Ground Operation 17-6
17.5.7 Takeoff 17-7
17.5.8 In Flight 17-7
17.5.9 Landing 17-8
17.5.10 Taxi 17-8

17.6 HOT-WEATHER OPERATION 17-9
17.6.1 Desert Operation 17-9
17.6.2 Preparation for Flight 17-9

17.7 MOUNTAIN AND ROUGH TERRAIN FLYING 17-9
17.7.1 Wind Direction and Velocity 17-9
17.7.2 Landing Site Evaluation 17-10
17.7.3 Effects of High Altitude 17-10
17.7.4 Turbulent Air Flight Techniques 17-10
17.7.5 Adverse Weather Conditions 17-11
17.7.6 Summary 17-11

PART VII — COMMUNICATIONS/NAVIGATION EQUIPMENT AND PROCEDURES

CHAPTER 18 — COMMUNICATIONS/NAVIGATION EQUIPMENT AND PROCEDURES

18.1 INTRODUCTION 18-1

18.2 IMPORTANCE OF PROPER PROCEDURES 18-1

18.3 COMMUNICATIONS AND ASSOCIATED ELECTRONIC EQUIPMENT 18-1
18.3.1 Controls 18-1
18.3.2 Antennas 18-2

18.4 TH-57C COMMUNICATIONS AUDIO SYSTEM 18-2
18.4.1 Intercom Control (C) 18-2
18.4.2 Receiver Audio Control Panels (C) 18-3

18.5 TH-57C COMMUNICATION SYSTEM 18-3
18.5.1 Controls and Functions 18-3
18.5.2 Operation 18-4
18.5.3 TH-57B Communications and Audio System 18-4

18.6 VHF RADIO KY-196 (C) 18-4
18.6.1 Operation 18-5

Page No.

18.7 VHF RADIO (KX155) (B) 18-5
18.7.1 COMM Radio Operation 18-5
18.7.2 NAV Radio Operation 18-5

18.8 UHF RADIO (AN/ARC-159 (V1)) (B) 18-6
18.8.1 Controls and Functions 18-6
18.8.2 Function Selector 18-7
18.8.3 Setting Preset Channels 18-7
18.8.4 UHF Radio Operation 18-8

18.9 KTR-909 UHF RADIO (C) 18-8

18.10 TRANSPONDER (KT-79A) AND ALTITUDE ENCODER (KE-127) 18-9
18.10.1 Controls and Functions 18-9
18.10.2 Operation 18-10

18.11 MARKER BEACON (KR-21 AND KA-40) (C) 18-10
18.11.1 Operation 18-10

18.12 DME/TACAN SYSTEM (KTU-709) (C) 18-10
18.12.1 DME Operation 18-10
18.12.2 TACAN Operation 18-11

18.13 ADF (KR-87) (C) 18-11
18.13.1 Controls and Functions 18-13
18.13.2 Operation 18-13

18.14 NAVIGATION AND NAVAIDS SYSTEM (C) 18-13

18.15 NAV 1 RECEIVER (KNS-81) (C) 18-14
18.15.1 Controls and Functions 18-14
18.15.2 Operation 18-15

18.16 COURSE DEVIATION INDICATOR KDI-206 (C) 18-15
18.16.1 Controls and Functions 18-16
18.16.2 Operation 18-16

18.17 NAV 2 RECEIVER (KLN-900 GPS) (C) 18-17

18.18 HORIZONTAL SITUATION INDICATOR KDI-525A (C) 18-20
18.18.1 Controls and Functions 18-20
18.18.2 Operation 18-21

18.19 VISUAL COMMUNICATIONS 18-21
18.19.1 Aircraft Lighting 18-21
18.19.2 Ground-to-Air Signals 18-21

Page No.

PART VIII — WEAPON SYSTEMS

CHAPTER 19 — WEAPON SYSTEMS (Not Applicable)

PART IX — FLIGHTCREW COORDINATION

CHAPTER 20 — COCKPIT MANAGEMENT

20.1 INTRODUCTION 20-1
20.1.1 Systematic Risk and Error Management 20-2

20.2 OPERATIONAL RISK MANAGEMENT 20-2
20.2.1 Three Levels of ORM 20-2
20.2.2 Four ORM Principles 20-2
20.2.3 Five-Step ORM Process 20-2
20.2.4 Time Critical ORM Process (ABCD Process) 20-2

20.3 CREW RESOURCE MANAGEMENT 20-3
20.3.1 Seven CRM Skills 20-3
20.3.2 Workload Management and Task Saturation 20-4
20.3.3 Avionics and Automation Management 20-5
20.3.4 Automation Pyramid 20-5
20.3.5 Sterile Cockpit 20-6

20.4 AIRCREW AUTHORITY POSITIONS 20-6
20.4.1 Flight Leader 20-6
20.4.2 Pilot In Command 20-6
20.4.3 Copilot 20-6
20.4.4 Aircrewman 20-6
20.4.5 Observer 20-7

20.5 AIRCREW OPERATIONAL POSITIONS 20-7
20.5.1 Monitoring Pilot 20-7
20.5.2 Flying Pilot 20-7

20.6 GENERAL CRM PROCEDURES 20-7
20.6.1 Checklist Procedures 20-7
20.6.2 Emergencies and System Failures 20-7
20.6.3 Spatial Disorientation 20-8

20.7 MISSION SPECIFIC CRM PROCEDURES 20-9
20.7.1 IFR CRM and Callouts 20-9
20.7.2 Functional Checkflights 20-11
20.7.3 Formation Flights 20-11
20.7.4 Training 20-11

Page No.

20.7.5 Search and Rescue 20-11
20.7.6 External Loads 20-11
20.7.7 Confined Area Landings 20-11
20.7.8 Overwater and Shipboard Operations 20-11
20.7.9 Night Vision Device Operations 20-11

PART X — NATOPS EVALUATION

CHAPTER 21 — NATOPS EVALUATION

21.1 CONCEPT 21-1

21.2 IMPLEMENTATION 21-1

21.3 DEFINITIONS 21-1
21.3.1 NATOPS Evaluation 21-1
21.3.2 NATOPS Reevaluation 21-1
21.3.3 Qualified 21-1
21.3.4 Conditionally Qualified 21-1
21.3.5 Unqualified 21-2
21.3.6 Area 21-2
21.3.7 Subarea 21-2
21.3.8 Critical Area/Subarea 21-2
21.3.9 Emergency 21-2
21.3.10 Malfunction 21-2

21.4 GROUND EVALUATION 21-2
21.4.1 Open-Book Examination 21-2
21.4.2 Closed-Book Examination 21-2
21.4.3 Oral Examination 21-2
21.4.4 OFT/WST Procedures Evaluation 21-3
21.4.5 Grading Instructions 21-3

21.5 FLIGHT EVALUATION 21-3
21.5.1 Flight Evaluation Grading Criteria 21-3
21.5.2 Flight Evaluation Grade Determination 21-13

21.6 FINAL GRADE DETERMINATION 21-13

21.7 RECORDS AND REPORTS 21-13
21.7.1 NATOPS Evaluation Question Bank 21-13
21.7.2 NATOPS Evaluation Forms 21-14

21.8 QUESTION BANK 21-14

PART XI — PERFORMANCE DATA

CHAPTER 22 — PERFORMANCE DATA INTRODUCTION

22.1 PURPOSE 22-1

22.2 GENERAL 22-1

Page No.

22.3 USE OF CHARTS 22-1

22.4 DATA BASIS 22-2
22.4.1 Flight Test Data 22-2
22.4.2 Derived from Flight Test 22-2
22.4.3 Calculated Data 22-2
22.4.4 Estimated Data 22-2

22.5 SPECIFIC CONDITIONS 22-2

22.6 GENERAL CONDITIONS 22-2
22.6.1 Rigging 22-2
22.6.2 Pilot Technique 22-2
22.6.3 Aircraft Variation 22-2
22.6.4 Instrument Variation 22-2

22.7 PERFORMANCE DISCREPANCIES 22-2

CHAPTER 23 — STANDARD DATA

23.1 AIRSPEED CALIBRATION CHART 23-1

23.2 PRESSURE ALTITUDE 23-1

23.3 DENSITY ALTITUDE CHART 23-1

23.4 TEMPERATURE CONVERSION CHART 23-1

23.5 SHAFT HORSEPOWER VS. TORQUE CHART 23-1

23.6 TORQUE AVAILABLE CHARTS 23-1

23.7 FUEL FLOW CHART 23-1

CHAPTER 24 — TAKEOFF

24.1 HOVERING CHARTS 24-1

24.2 TAKEOFF CHART 24-1

CHAPTER 25 — CLIMB

25.1 CLIMB PERFORMANCE CHARTS 25-1

25.2 CLIMB-DESCENT CHART 25-1
25.2.1 Example 25-5

25.3 SERVICE CEILING CHARTS 25-5

CHAPTER 26 — CRUISE

26.1 CRUISE CHARTS 26-1
26.1.1 Airspeed 26-1
26.1.2 Torque (Percent Q) 26-1

Page No.

26.1.3 Fuel Flow 26-1
26.1.4 Maximum Range 26-1
26.1.5 Maximum Endurance and Maximum Rate of Climb 26-1

26.2 TIME AND RANGE VS. FUEL CHART 26-1

CHAPTER 27 — ENDURANCE

27.1 HOVERING ENDURANCE CHART 27-1

CHAPTER 28 — EMERGENCY OPERATION

28.1 AUTOROTATIONAL GLIDE CHARACTERISTIC CHART 28-1

28.2 GLIDE DISTANCE CHART 28-1

CHAPTER 29 — SPECIAL CHARTS

29.1 RADIUS OF TURN AT CONSTANT AIRSPEED CHART 29-1

29.2 WIND COMPONENT CHART 29-1

29.3 AIRSPEED OPERATING LIMITS CHART 29-1

29.4 DRAG CHART 29-1

INDEX Index-1

LIST OF ILLUSTRATIONS

Page No.

CHAPTER 1 — GENERAL DESCRIPTION

Figure 1-1. General Arrangement 1-2
Figure 1-2. Principal Dimensions 1-3
Figure 1-3. TH-57C Crew Station 1-4
Figure 1-4. TH-57B Crew Station (162XXX) 1-5

CHAPTER 2 — SYSTEMS

Figure 2-1. Engine 2-2
Figure 2-2. Pilot Collective 2-3
Figure 2-3. TH-57C Instrument Panel 2-5
Figure 2-4. TH-57C/GPS Instrument Panel 2-7
Figure 2-5. TH-57B Instrument Panel 2-8
Figure 2-6. Engine Oil System 2-12
Figure 2-7. TH-57C Rotor Brake 2-15
Figure 2-8. Transmission Oil System 2-16
Figure 2-9. Fuel System 2-18
Figure 2-10. Overhead Circuit Breaker Panel and Switches 2-19
Figure 2-11. TH-57B Electrical System Schematic 2-21
Figure 2-12. TH-57C Electrical System Schematic 2-22
Figure 2-13. TH-57C Pedestal Circuit Breaker Panel and Switches 2-23
Figure 2-14. TH-57C Voltmeter Panel and Miscellaneous Switches 2-23
Figure 2-15. TH-57C Electrical Bus Distribution 2-24
Figure 2-16. Hydraulic System 2-27
Figure 2-17. Flight Control System 2-29
Figure 2-18. Cyclic Grip 2-30
Figure 2-19. TH-57C AFCS Controller 2-32
Figure 2-20. TH-57C Computers and Trim Damper Units 2-33
Figure 2-21. TH-57C Electromechanical Linear Actuators 2-34
Figure 2-22. Turn-and-Slip Indicator 2-37
Figure 2-23. Magnetic Compass 2-38
Figure 2-24. TH-57C Compass Heading System 2-39
Figure 2-25. Slaving Adapter 2-40
Figure 2-26. Radar Altimeter System 2-41
Figure 2-27. Caution Panels 2-42
Figure 2-28. Chip Detector Power Unit 2-44
Figure 2-29. Exterior Lighting 2-45
Figure 2-30. Environmental Control System 2-47

Page No.

CHAPTER 3 — SERVICE AND HANDLING

Figure 3-1. Servicing Diagram 3-2
Figure 3-2. Specification/TH-57 Fuel Reference Chart 3-4
Figure 3-3. System Capacities 3-5
Figure 3-4. Ground Handling Wheel 3-6
Figure 3-5. Turning Radius 3-6

CHAPTER 4 — OPERATING LIMITATIONS

Figure 4-1. N_f Overspeed Chart 4-2
Figure 4-2. Rotor Engagement/Disengagement Wind Limitations 4-3
Figure 4-3. Instrument Markings 4-4
Figure 4-4. Airspeed Limitations Placard 4-9
Figure 4-5. Lateral and Longitudinal Center-of-Gravity Limits 4-10
Figure 4-6. Height Velocity Diagram 4-13

CHAPTER 6 — FLIGHT PREPARATION

Figure 6-1. Loading 6-3

CHAPTER 7 — SHORE-BASED PROCEDURES

Figure 7-1. Preflight Sequence 7-3
Figure 7-2. Helicopter Components 7-4
Figure 7-3. Normal Approach 7-24

CHAPTER 8 — SHIPBOARD PROCEDURES

Figure 8-1. Launch and Recovery Winds 8-6

CHAPTER 9 — SPECIAL PROCEDURES

Figure 9-1. Power Recovery Autorotation 9-2
Figure 9-2. Full Autorotation 9-3
Figure 9-3. Four-Plane Division Cruise 9-7

CHAPTER 10 — FUNCTIONAL CHECKFLIGHT PROCEDURES

Figure 10-1. Functional Checkflight Flight Profile 10-2
Figure 10-2. Autorotational Rpm (N_r) Computation Chart 10-15

CHAPTER 11 — FLIGHT CHARACTERISTICS

Figure 11-1. Mast Bumping Recovery/Technique 11-2
Figure 11-2. Slope Landing and Dynamic Rollover Condition 11-5
Figure 11-3. Weathercock Stability 11-8
Figure 11-4. Tail Rotor Vortex Ring State 11-8
Figure 11-5. Main Rotor Disk Vortex Interference 11-9

Page No.

CHAPTER 12 — EMERGENCY PROCEDURES

Figure 12-1. Caution and Warning — Corrective Action 12-2

CHAPTER 14 — IN-FLIGHT EMERGENCIES

Figure 14-1. Lost Sight Dispersal — Inadvertent Instrument Meteorological Conditions 14-29

CHAPTER 17 — ALL-WEATHER OPERATIONS

Figure 17-1. Wind Flow Over and Around Peaks 17-12
Figure 17-2. Approach to Ridgeline 17-13
Figure 17-3. Wind Effects Over Gorge or Canyons 17-13
Figure 17-4. Wind Effects in Valleys or Canyons 17-14
Figure 17-5. Wind Effect in a Confined Area 17-14

CHAPTER 18 — COMMUNICATIONS/NAVIGATION EQUIPMENT AND PROCEDURES

Figure 18-1. Antenna Locations 18-2
Figure 18-2. Audio Control Panel (KMA-24H) 18-3
Figure 18-3. VHF (KY-196) 18-5
Figure 18-4. VHF Radio (KX155) 18-6
Figure 18-5. UHF Radio (AN/ARC-159 (V1)) 18-7
Figure 18-6. KTR-909 UHF Transceiver 18-8
Figure 18-7. Aircraft Transponder (KT-79A) 18-9
Figure 18-8. Marker Beacon (KR-21) 18-10
Figure 18-9. DME KDI-573 18-11
Figure 18-10. ADF Receiver (KR-87) 18-12
Figure 18-11. NAV Receiver (KNS-81) 18-14
Figure 18-12. Course Deviation Indicator 18-16
Figure 18-13. KLN-900 GPS Control Functions 18-18
Figure 18-14. GPS Panel 18-20
Figure 18-15. Horizontal Situation Indicator 18-22

CHAPTER 20 — COCKPIT MANAGEMENT

Figure 20-1. Cumulative Act Effect Diagram (Reason, James (1990). Human Error) 20-1
Figure 20-2. Task Saturation (FAA-H-8083-21, FAA Helicopter Flying Handbook) 20-4
Figure 20-3. Automation Pyramid 20-5

CHAPTER 21 — NATOPS EVALUATION

Figure 21-1. NATOPS Flight Evaluation Worksheet 21-4
Figure 21-2. NATOPS Evaluation Worksheet for Naval Aircrewman 21-10
Figure 21-3. NATOPS Evaluation Sheet 21-13

Page No.

CHAPTER 23 — STANDARD DATA

Figure 23-1. Airspeed Calibration Chart 23-2
Figure 23-2. Density Altitude/Temperature Conversion Chart 23-3
Figure 23-3. Temperature Conversion Chart 23-5
Figure 23-4. Shaft Horsepower vs. Torque 23-6
Figure 23-5. Maximum Torque Available (5-Minute Operation) Chart 23-7
Figure 23-6. Torque Available (Continuous Operation) Chart 23-8
Figure 23-7. Fuel Flow Chart 23-9

CHAPTER 24 — TAKEOFF

Figure 24-1. Hover Chart 24-2
Figure 24-2. Takeoff Chart 24-6

CHAPTER 25 — CLIMB

Figure 25-1. Climb Performance Chart 25-2
Figure 25-2. Climb-Descent Chart 25-4
Figure 25-3. Service Ceiling 25-6

CHAPTER 26 — CRUISE

Figure 26-1. Cruise Chart 26-2
Figure 26-2. Time and Range vs. Fuel Chart 26-18

CHAPTER 27 — ENDURANCE

Figure 27-1. Hover Endurance Chart 27-2

CHAPTER 28 — EMERGENCY OPERATION

Figure 28-1. Autorotational Glide Characteristic Chart 28-2
Figure 28-2. Glide Distance Chart 28-3

CHAPTER 29 — SPECIAL CHARTS

Figure 29-1. Radius of Turn at Constant Airspeed Chart 29-2
Figure 29-2. Wind Component Chart 29-3
Figure 29-3. Airspeed Operating Limits Chart 29-4
Figure 29-4. Drag Chart 29-5

LIST OF ABBREVIATIONS AND ACRONYMS

A

ac. Alternating current.

ADC. Air data computer.

ADF. Automatic direction finder.

ADRL. Automatic distribution requirements listing.

AF FUEL FILTER. Airframe-mounted fuel filter.

AFCS. Automatic flight control system.

AGL. Above ground level.

ALT. Altimeter.

AM. Amplitude modulation.

B

BCP. Bromochloridfluoromethane.

BFO. Beat frequency oscillator.

C

CAS. Calibrated airspeed.

CDI. Course deviation indicator.

cg. Center of gravity.

CL. Caution light.

CQ. Carrier qualifications.

D

dc. Direct current.

DH. Decision height.

DLQ. Deck landing qualifications.

E

ECS. Environmental control system.

EENT. End of evening nautical twilight.

ESS. Explosive safety survey.

ETA. Estimated time of arrival.

F

FAT. Free air temperature.

FCLP. Field carrier landing practice.

FCS. Flight control system.

FDLP. Field deck landing practice.

FLIP. Flight information publication.

FOD. Foreign object damage.

FOV. Field of view.

fpm. Feet per minute.

FT. Force trim.

FUEL QTY IND. Fuel quantity indicator.

G

GOV. Governor.

GPS. Global positioning system.

GPU. Ground power unit.

GSI. Glideslope indicator light.

H

HABD. Helicopter aircrew breathing device.

HIGE. Hover in ground effect.

HOGE. Hover out of ground effect.

HSI. Horizontal situation indicator.

I

IAS. Indicated airspeed.

ICS. Intercommunication system.

IFR. Instrument flight rules.

IGE. In ground effect.

ILS. Instrument landing system.

IMC. Instrument meteorological conditions.

IVSI. Instantaneous vertical speed indicator.

K

KIAS. Knots indicated airspeed.

kt. Knot(s).

L

LOC. Localizer.

LPU. Life preserver unit.

LSE. Landing signal enlisted.

LZ. Landing zone.

M

MAF. Maintenance action form.

MSL. Mean sea level.

N

N_f. Free-power turbine.

N_g. Gas-producer turbine.

nm. Nautical mile.

N_r. Main rotor rpm.

NVD. Night vision device.

O

OAT. Outside air temperature.

OGE. Out of ground effect.

P

PA. Pressure altitude.

PBS. Pushbutton switch.

PIC. Pilot in command.

PQM. Pilot qualified in model.

psi. Pounds per square inch.

Q

Q. Torque.

QUAL. Qualification.

R

RAIM. Receiver autonomous integrity monitoring (GPS).

RMI. Radio magnetic indicator.

rpm. Revolutions per minute.

RT. Receiver transmitter.

S

SGSI. Stabilized glideslope indicator.

shp. Shaft horsepower.

SNA. Student naval aviator.

SOP. Standard operating procedure.

STAB. Ministab flight control system.

T

TACAN. Tactical air navigation.

TAS. True airspeed.

TOT. Turbine outlet temperature.

TR. Tail rotor.

TWIST GRIP. Throttle.

U

UHF. Ultra high frequency.

V

VFR. Visual flight rules.

VHF. Very high frequency.

VIDS. Visual indication display system.

VOR. VHF omnidirectional range.

VSI. Vertical speed indicator.

W

WPT. Waypoint.

X

XMT. Transmit.

Z

Z (ZULU). Greenwich mean time.

PREFACE

SCOPE

This NATOPS manual is issued by the authority of the Chief of Naval Operations and under the direction of Commander, Naval Air Systems Command in conjunction with the Naval Air Training and Operating Procedures Standardization (NATOPS) program. It provides the best available operating instructions for most circumstances, but no manual is a substitute for sound judgment. Operational necessity may require modification of the procedures contained herein. Read this manual from cover to cover. It's your responsibility to have a complete knowledge of its contents.

APPLICABLE PUBLICATIONS

The following applicable publications complement this manual:

NAVAIR 01-H57BC-1B (NATOPS Pilot's Pocket Checklist)

NAVAIR 01-H57BC-1F (NATOPS Functional Checkflight Checklist)

HOW TO GET COPIES

Additional copies of this manual and changes thereto may be procured through the local supply system from NAVICP Philadelphia via DAAS in accordance with NAVSUP P-409 (MILSTRIP/MILSTRAP), or a requisition can be submitted to Naval Supply Systems Command via the Naval Logistics Library (NLL) website, https://www.navsup.navy.mil/navsup. This publication is also available to view and download from the NATEC website, https://mynatec.navair.navy.mil.

AUTOMATIC DISTRIBUTION (with Updates)

This publication and changes to it are automatically sent to activities that are established on the Automatic Distribution Requirements List (ADRL) maintained by Naval Air Technical Data and Engineering Service Command (NATEC), in San Diego, CA. If there is continuing need for this publication, each activity's Central Technical Publication Librarian must coordinate with the NATOPS Model Manager of this publication to ensure appropriate numbers of this and associated derivative manuals are included in the automatic mailing of updates to this publication.

Note

Activities not coordinating with the NATOPS Model Manager unit for more than 12 months may be dropped from distribution.

UPDATING THE MANUAL

To ensure that the manual contains the latest procedures and information, NATOPS review conferences are held in accordance with the current OPNAVINST 3710.7 series.

CHANGE RECOMMENDATIONS

Recommended changes to this manual or other NATOPS publications may be submitted by anyone in accordance with OPNAVINST 3710.7 series.

Change recommendations of any nature, URGENT/PRIORITY/ROUTINE should be submitted directly to the Model Manager via the NATOPS website (https://airworthiness.navair.navy.mil) and the AIRS (Airworthiness Issue Resolution System) database. The AIRS is an application that allows the Model Manager and the NATOPS Office, Naval Air Systems Command (NAVAIR) AIR-4.0P to track all change recommendations with regards to NATOPS

products. The Model Manager will be automatically notified via email when a new recommendation is submitted. A classified side of the website is available to submit classified information via the SIPRNET.

The address of the Model Manager of this aircraft/publication is:

Commanding Officer
ATTN: Model Manager
Commander Training Air Wing Five
Naval Air Station, Whiting Field
Milton, Florida 32570

Telephone:
Commercial (850) 623-7555
DSN 868-7555

YOUR RESPONSIBILITY

NATOPS manuals are kept current through an active manual change program. Any corrections, additions, or constructive suggestions for improvement of its contents should be submitted by urgent, priority or routine change recommendations, as appropriate, at once.

NATOPS FLIGHT MANUAL INTERIM CHANGES

Interim changes are changes or corrections to the NATOPS Flight Manuals promulgated by CNO or COMNAVAIRSYSCOM. Interim Changes are issued either as printed pages, or as a naval message. The Interim Change Summary page is provided as a record of all interim changes. Upon receipt of a change or revision, the custodian of the manual should check the updated Interim Change Summary to ascertain that all outstanding interim changes have been either incorporated or canceled; those not incorporated shall be recorded as outstanding in the section provided.

CHANGE SYMBOLS

Revised text is indicated by a black vertical line in either margin of the page, like the one printed next to this paragraph. The change symbol shows where there has been a change. The change might be material added or information restated. A change symbol in the margin by the chapter number and title indicates a new or completely revised chapter.

WARNINGS, CAUTIONS, AND NOTES

The following definitions apply to WARNINGs, CAUTIONs, and Notes found throughout the manual.

WARNING

Explanatory information about an operating procedure, practice, or condition, etc., that may result in injury or death, if not carefully observed or followed.

CAUTION

Explanatory information about an operating procedure, practice, or condition, etc., that may result in damage to equipment, if not carefully observed or followed.

Note

Explanatory information about an operating procedure, practice, or condition, etc., that must be emphasized.

WORDING

The concept of word usage and intended meaning adhered to in preparing this manual is as follows:

1. “Shall” has been used only when application of a procedure is mandatory.
2. “Should” has been used only when application of a procedure is recommended.
3. “May” and “need not” have been used only when application of a procedure is optional.
4. “Will” has been used only to indicate futurity, never to indicate any degree of requirement for application of a procedure.
5. Land immediately means execute a landing without delay. The primary consideration is to assure the survival of the occupants.
6. Land as soon as possible means land at the first site at which a safe landing can be made.
7. Land as soon as practical means extended flight is not recommended. The landing site and duration of flight is at the discretion of the pilot in command.

NATOPS/TACTICAL CHANGE RECOMMENDATION
OPNAV 3710/6 (4-90) S/N 0107-LF-009-7900

DATE _____

TO BE FILLED IN BY ORIGINATOR AND FORWARDED TO MODEL MANAGER

FROM (originator)	Unit
TO (Model Manager)	Unit

Complete Name of Manual/Checklist	Revision Date	Change Date	Section/Chapter	Page	Paragraph

Recommendation (be sepcific)

☐ CHECK IF CONTINUED ON BACK

Justification

Signature	Rank	Title

Address of Unit or Command

TO BE FILLED IN BY MODEL MANAGER *(Return to Originator)*

FROM	DATE
TO	

REFERENCE

(a) Your Change Recommendation Dated _____

☐ Your change recommendation dated _____ is acknowledged. It will be held for action of the review conference planned for _____ to be held at _____

☐ Your change recommendation is reclassified URGENT and forwarded for approval to _____ _____ by my DTG _____

/S/ _____ MODEL MANAGER | _____ AIRCRAFT

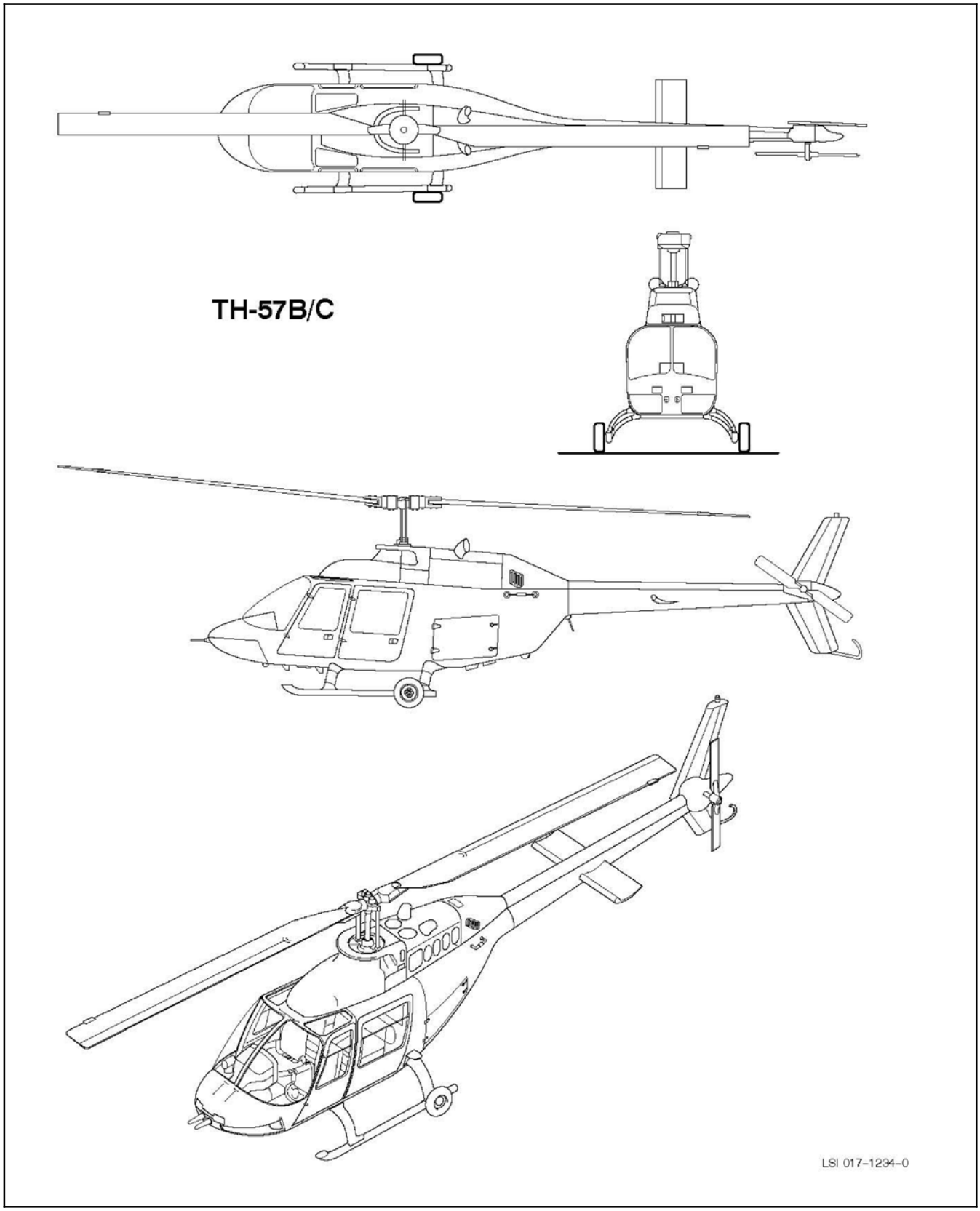
TH-57B/C
LSI 017-1234-0

PART I

The Aircraft

Chapter 1 — General Description

Chapter 2 — Systems

Chapter 3 — Service and Handling

Chapter 4 — Operating Limitations

CHAPTER 1

General Description

1.1 THE HELICOPTER

The TH–57B/C is a single–engine, land–based utility–type helicopter designed for reasonably level, firm terrain. Additionally, the TH–57C is Instrument Flight Rules (IFR) certified. The primary purpose of the TH–57C is training in both basic and advanced instrument (simulated or actual) conditions as well as introducing basic Visual Flight Rules (VFR) tactical maneuvering (to include shipboard operations). The primary purpose of the TH–57B is helicopter familiarization training and basic VFR tactical maneuvering. The standard seating configuration provides for pilot, copilot, and three passengers. The pilot station is on the right side and a full set of dual flight controls is installed on the left side. The airframe consists of the cabin section, cowling section, landing gear section, tailboom section, and vertical fin. The airframe forward section is primarily an aluminum honeycomb, semi–monocoque structure. The tailboom is a full monocoque structure, providing maximum strength–to–weight ratio and rigidity. The honeycomb material aids in maintaining a low noise level because of its soundproofing qualities. Maximum visibility and shielding from direct sunlight are provided by the transparent tinted plastic enclosure that constitutes the nose section, cabin roof panels, and door panels. A 16–cubic–foot capacity baggage compartment is located beneath the engine compartment. The single–compartment fuel cell is located below and behind the passenger seat. The fuel, passengers, and/or cargo are located under the main rotor to minimize the center–of–gravity travel. The main rotor is a two–bladed, semirigid, underslung, flapping type, employing two and one–fourth degrees preconing. Each main rotor blade is attached to a common hub by means of a grip, a pitch change bearing, and a tension–torsion strap assembly to carry blade centrifugal force. The main rotor blades are all metal, consisting of extruded aluminum alloy nose block, aluminum alloy trailing edge, and an aluminum honeycomb filler and are individually interchangeable. The tail rotor (TR) is a two–bladed, semirigid, flapping type. Each blade is connected to a common yoke by means of two spherical bearings and two bolts.

1.2 SPEED RANGE

The speed range of this helicopter, clean configuration, is 0 to 130 knots based on standard day conditions (29.92 inches of mercury at 15 °C at sea level).

1.3 TAKEOFF GROSS WEIGHT

The maximum gross weight for takeoff is 3,200 pounds.

1.4 HELICOPTER ARRANGEMENT

Refer to Figure 1-1 for general arrangement.

Refer to Figure 1-2 for principal dimensions.

Refer to Figures 1-3 and 1-4 for crew station diagrams.

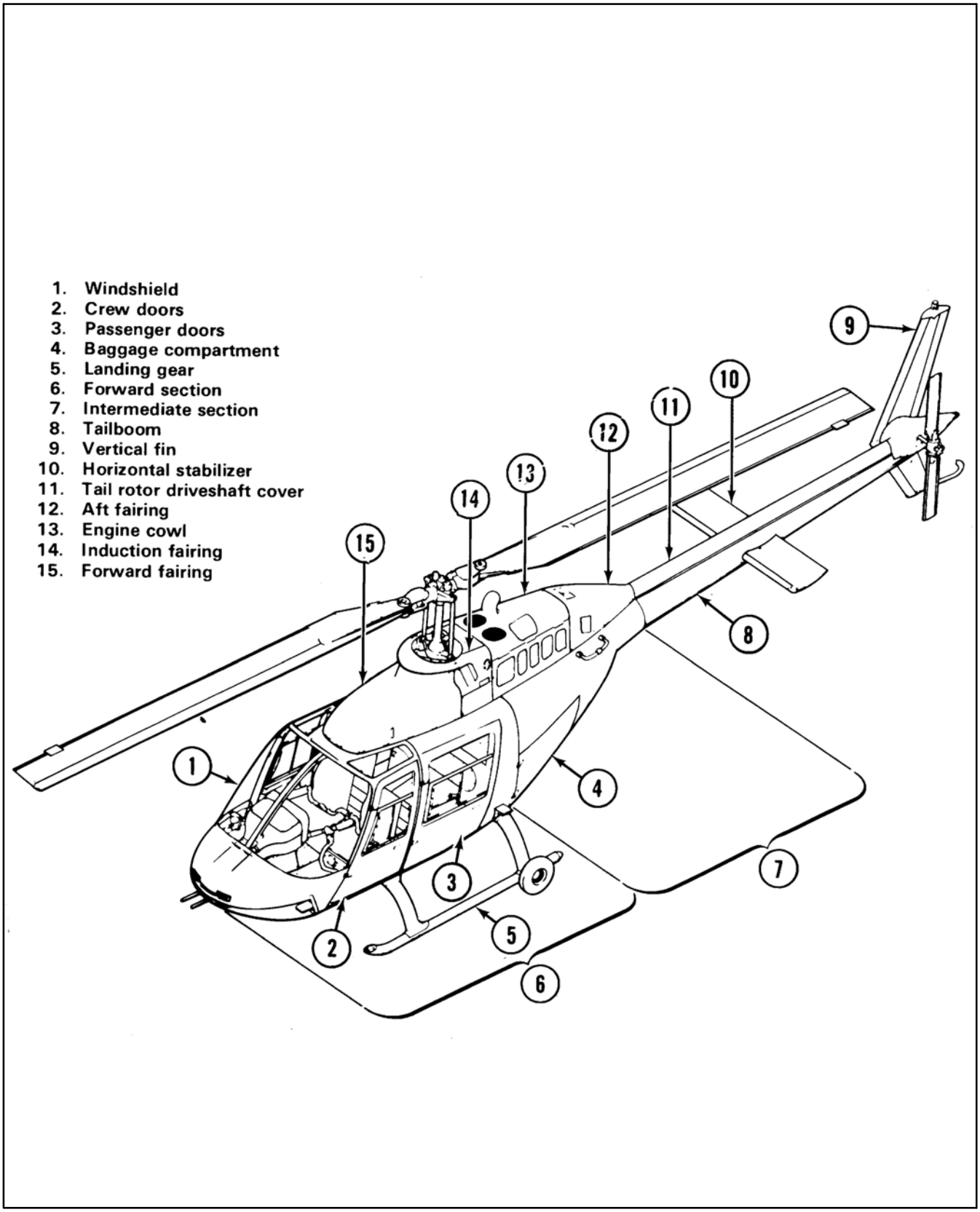

Figure 1-1. General Arrangement

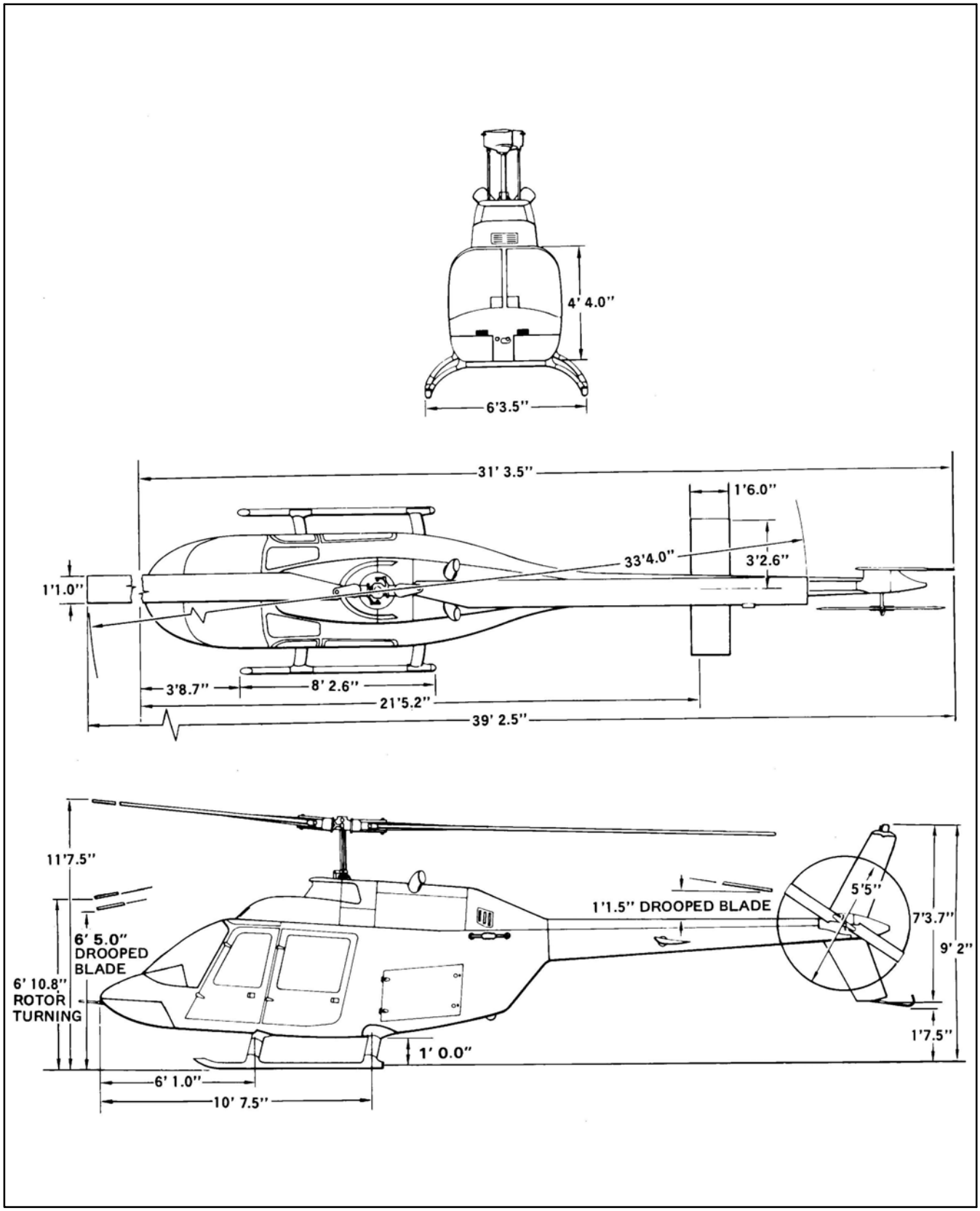

Figure 1-2. Principal Dimensions

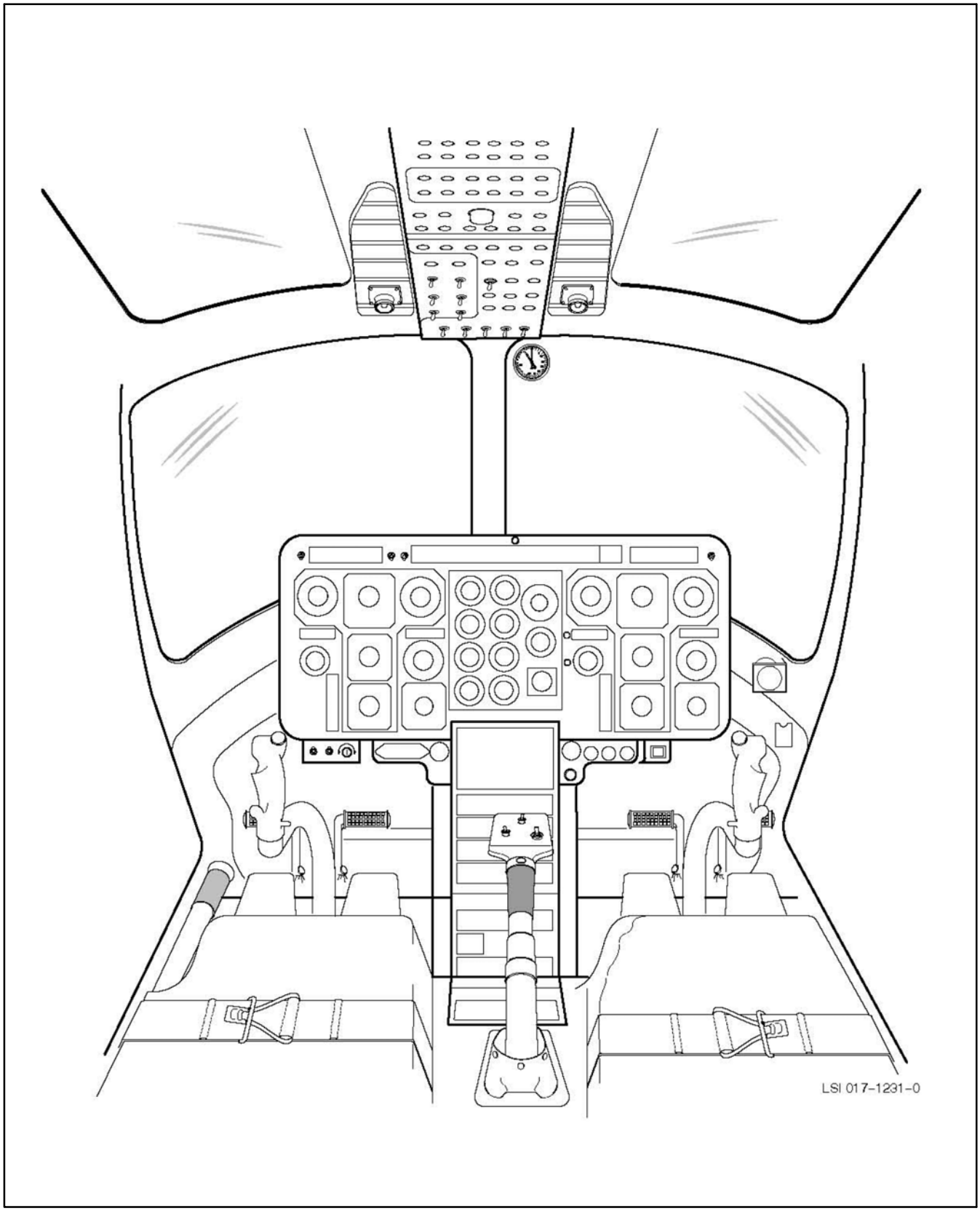

Figure 1-3. TH–57C Crew Station

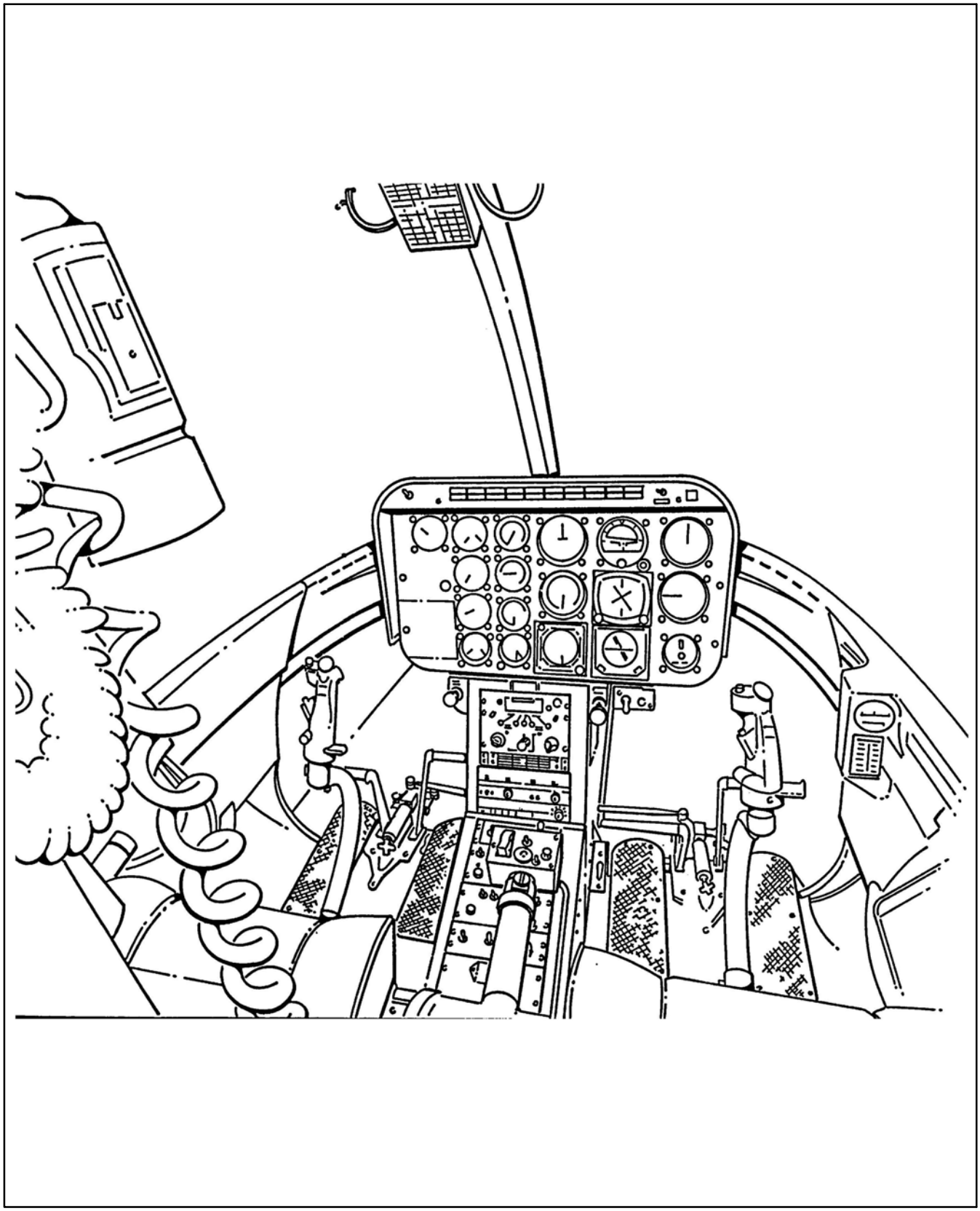

Figure 1-4. TH–57B Crew Station (162XXX)

CHAPTER 2

Systems

2.1 POWERPLANT

The helicopter is powered by a 250–C20J engine (Figure 2-1), manufactured by Rolls Royce. It is an internal combustion, gas turbine engine consisting of a six–axial–and one–centrifugal–stage compressor, a single combustion chamber, a two–stage gas–producer turbine, and a two–stage power turbine. The engine weighs 157 pounds and is capable of developing 420 Shaft Horsepower (shp) on a standard day. This has been limited to 317 shp because of drive train limitations. Additionally, an accessory gearbox powers gear trains from the gas producer and power turbine.

Power is generated in the 250–C20J engine through the use of expanding gases passing over turbine blades. Ambient air enters the compressor inlet section and is compressed approximately 6.5 times its original ambient pressure. The high–pressure air is then ducted rearward to the combustion chamber through a diffuser scroll and two air transfer tubes. The combustion chamber regulates the engine airflow. Fuel is injected through a nozzle in the center rear section of the combustor and is ignited by a capacitance–type ignitor plug used only during the starting cycle. Ignition is self sustained after engine start. The hot combustion gases pass forward through the two–stage gas–producer turbine and the two–stage free–power turbine. The free–power turbine drives the power output shaft. After passing through the power turbine section, the gases are vented through two exhaust ducts. Thrust from the exhausted gases is negligible. The compressor assembly consists of a front support, rotors, case, and diffuser. The compressor front support has seven radial struts that direct the incoming air onto the compressor rotor. An anti–ice system is incorporated to protect both the struts and front support area from inlet icing.

Approximately 75 percent of the air going to the combustion chamber is used for cooling. The remainder of the air is mixed with fuel from the fuel nozzle for burning. The combustion assembly consists of a combustion outer case and liner. The fuel nozzle and spark ignitor thread through the aft end of the outer case into the aft end of the combustion liner.

A burner drain valve is located in the lowest point of the combustion chamber to drain any fuel overboard that may collect in the chamber after engine shutdown.

The turbine assembly is made up of a two–stage Gas–producer Turbine (N_g) and a two–stage Free–power Turbine (N_f). These two components are not mechanically coupled, but are connected by a gas coupling in which the free–power turbine turns as the exhaust gases impinge on its blades. At 100 percent power, the Gas–producer Turbine (N_g) rotates at 51,989 rpm and the Free–power Turbine (N_f) rotates at 33,956 rpm. Approximately two–thirds of the energy delivered to the Gas–producer Turbine (N_g) is used to drive the compressor, while the other one–third is used to power the free–power turbine. The Gas–producer Turbine (N_g) drive train powers the gas–producer fuel control, gas–producer tachometer–generator, starter–generator, engine–driven fuel pump, engine oil pump, and the standby generator. The Free–power Turbine (N_f) gear train drives the power turbine tachometer–generator, power–turbine governor, torquemeter, and the power output shaft.

The compressor blades and vanes are provided with elongated slots between every other vane at the manifold to ensure efficient airflow over the blades and vanes. The air bleed control valve is automatically open during starting and ground idle operation. It remains open until sensing a predetermined pressure ratio, at which time the valve automatically begins to close.

2.1.1 Engine Anti–Icing System

Operation of the engine during icing conditions could result in ice formation on the compressor front support. If ice were allowed to build up, airflow to the engine would be restricted and engine performance decreased. The engine has an anti–icing system to prevent ice formation on the compressor front support. The anti–icing system includes an anti–icing valve mounted at the 12 o'clock position on the front face of the diffuser scroll, two stainless steel lines between the anti–icing valve and the compressor front support, and passages within the compressor front support.

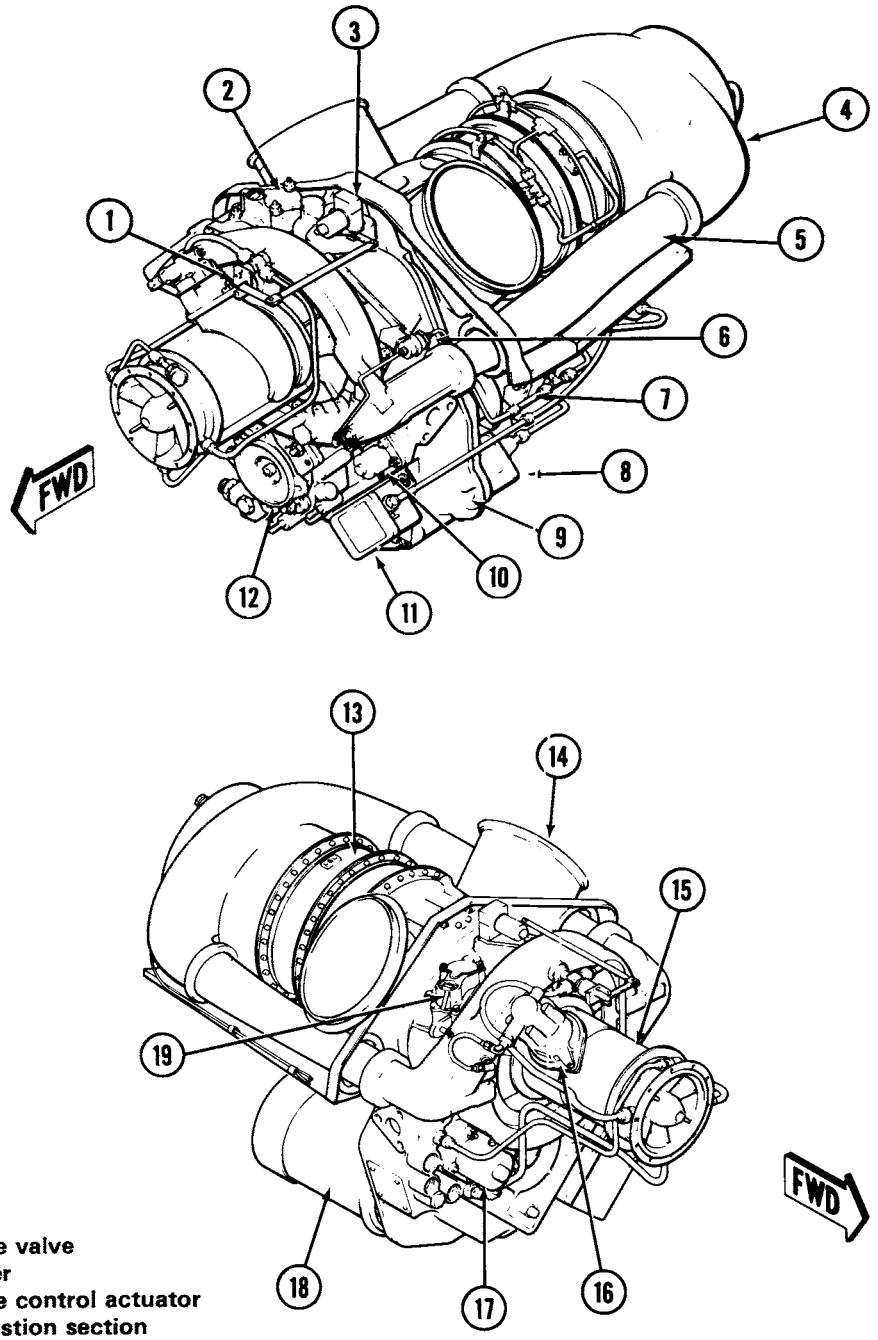

1. Anti-ice valve
2. Oil filter
3. Anti-ice control actuator
4. Combustion section
5. Compressor discharge tubes
6. Air filter
7. Power turbine governor
8. Fuel pump and filter
9. Accessory gearbox
10. Tachometer generator (power turbine)
11. Ignition exciter assembly
12. Freewheeling unit
13. Turbine section
14. Exhaust stack
15. Compressor section
16. Compressor bleed valve assembly
17. Tachometer generator (gas producer)
18. Starter generator
19. Oil pressure regulator

Figure 2-1. Engine

The pilot must turn on the anti–icing system when encountering icing conditions. When this system is on, hot compressor discharge air is directed to two ports on the compressor front support. Hot air flows between the walls of the outer skin, into the hollow radial struts, through the struts, and between the walls of the hub. Anti–icing air is exhausted out of slots on the trailing edges of the struts and out of holes in the hub. The flow of the hot anti–icing air keeps the temperature of the compressor front support above the freezing point of water.

Note

Engine anti–icing will remain in the last energized position in the event of an electrical failure.

2.1.2 Twist Grip (Throttle)

The rotating twist grip (Figure 2-2) is located on the pilot and copilot collective pitch levers and serves as a throttle. The twist grip is a simple single grip that is used to start the engine, adjust the rpm to idle, or to select up to maximum power. The twist grip is rotated to the left to increase power.

A spring–loaded idle release button marked IDLE REL (Figure 2-2) is incorporated on the twist grip to prevent inadvertent closing of the twist grip during flight or ground run. To bypass the idle release, depress and hold the IDLE REL button while closing the twist grip to the off position. It is not necessary to depress the idle release button when moving from the off position to flight idle. The three positions of the twist grip are open, flight idle (approximately 62.5 percent N_g), and off.

Note

The spring–loaded idle release button is located only on the pilot twist grip.

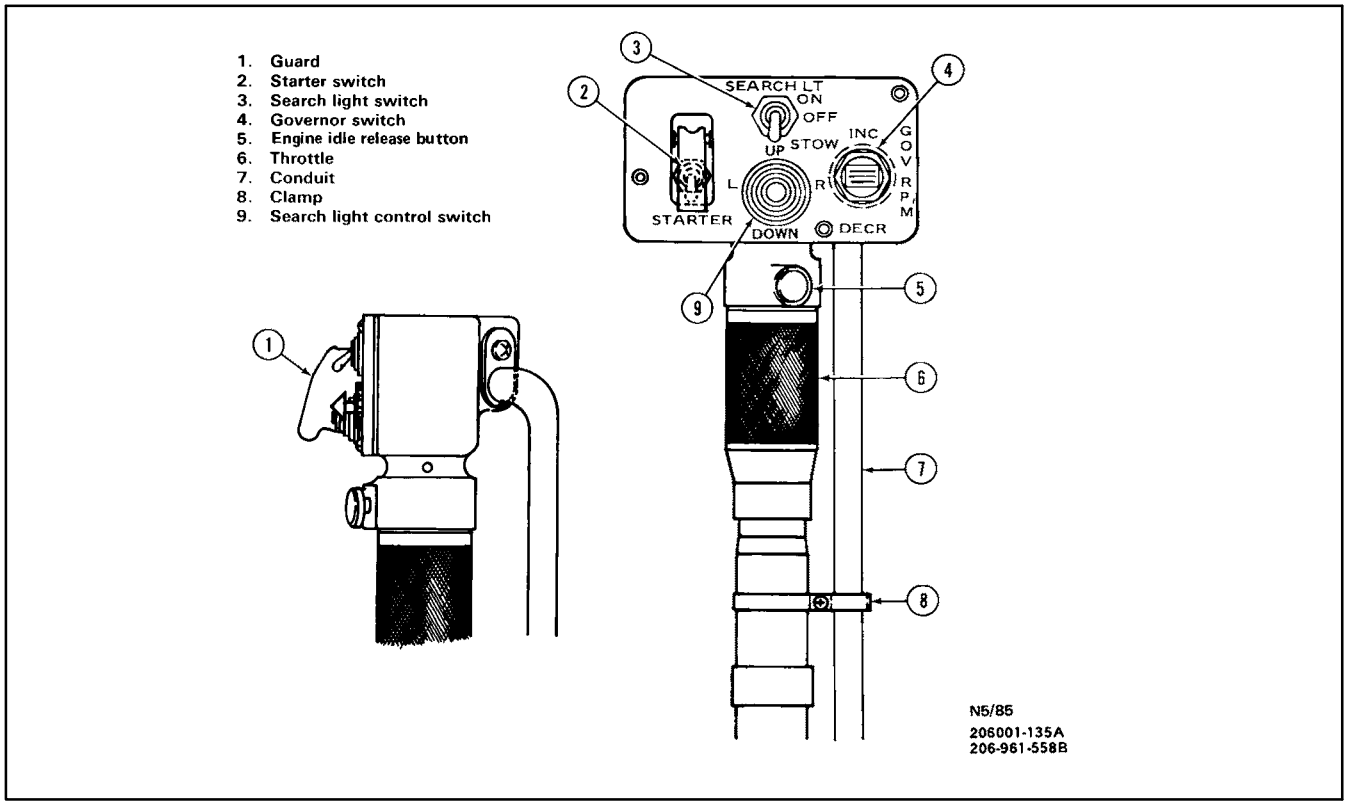

Figure 2-2. Pilot Collective

2.1.3 Turbine Power Control

The power turbine governor lever is connected by linkage to the collective pitch control system. Movement of the collective pitch lever results in a corresponding movement of the power turbine governor lever mounted on the left side of the engine. This action provides droop compensation to minimize transient rpm variations as power changes are made. The power turbine governor control system incorporates a linear actuator, which is controlled electrically from the cockpit by a GOV RPM INC DECR switch mounted on the pilot collective pitch lever (Figure 2-2).

The GOV RPM switch is used to set a power turbine speed (N_f) between 96 and 101 ±0.5 percent rpm. The GOV RPM switch is protected by the GOV CONT circuit breaker.

2.1.4 Overspeed Control

The gas producer fuel control and the power turbine governor serve to provide speed governing of the Free–power Turbine (N_f) and overspeed protection for the Gas–producer Turbine (N_g).

2.1.4.1 Accumulators

Two accumulator cans are located in the line between the N_f governor and N_g fuel control to eliminate transient air surges in governor reset pressure from the governor to the fuel control, resulting in smoother fuel control and engine power response.

2.1.5 Fuel Control

The fuel control system is pneumatic–mechanical and senses N_g and N_f rpm, compressor discharge pressure, and twist grip position to maintain constant rotor rpm in powered flight by varying fuel flow from the fuel control. This system schedules fuel flow during starting, acceleration, governing, deceleration, and shutdown.

2.1.6 Engine Instruments and Indicators

2.1.6.1 Torquemeter

The torquemeter located on the instrument panel (Figures 2-3, 2-4, and 2-5) is a direct reading, wet–line gauge requiring electrical power for operation. The sensing element, located within the gauge, indicates pressure in percent readings of the torque imposed upon the engine output shaft. The display indication is protected by the TRQ circuit breaker (Figures 2-5 and 2-10).

To warn the pilot of a potential overtorque, the digital display and associated TRQ caution light will flash on and off once per second when the indicated torque goes above 100 percent. The display and caution light will stop flashing when the indicated torque goes below 100 percent.

If an overtorque exceedance does occur (100 to 110 percent for 5 seconds or greater than 110 percent torque), the digital display and associated TRQ caution light will flash twice per second as long as the torque is in exceedance. Once torque falls below 100 percent, the TRQ caution light will extinguish; however, the digital display will continue to flash for one minute to ensure the pilot is aware of the overtorque condition. The 1–minute timing is started after torque drops below 100 percent. After 1 minute the gauge will operate normally until the torque limits are exceeded or the indicated torque goes below 5 percent, in which case the digital display will resume flashing twice per second.

Each time power is applied to the torque gauge, the digital display automatically plays back the data stored in the nonvolatile memory (during this time, the instrument pointer shows the current engine torque). Each torque parameter played back is preceded by a label identifying data type. During playback, each display frame is displayed for 2 seconds before stepping to the next frame, except when stated otherwise. The torque data is played back in the following order:

1. All segments display 188.8 to verify all display elements are functioning.
2. Flight Operation Label _O_ is displayed if no exceedance has occurred since the last time the instrument was reset, otherwise, the flight operational exceedance Label _O_E is displayed flashing on and off twice per second for 10 seconds.
3. The highest peak torque event since the instrument was last reset is displayed followed by the time in seconds the torque was above 100 percent. If the peak torque was below 100 percent, the peak torque will be displayed for 0 seconds.

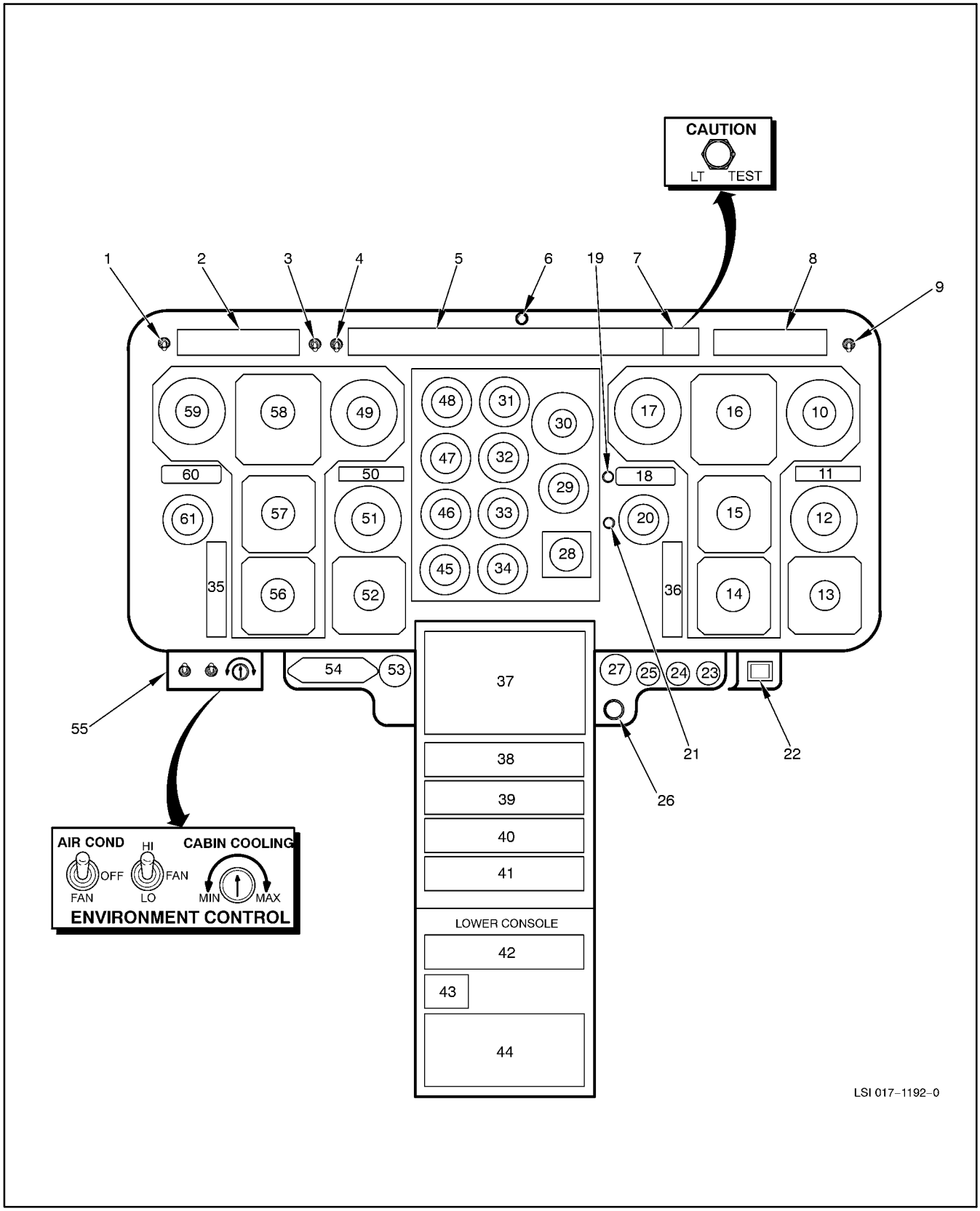

Figure 2-3. TH–57C Instrument Panel (Sheet 1 of 2)

1. Audio NORM/EMERG switch
2. Audio control panel
3. Audio MUTE switch
4. Caution panel BRIGHT/DIM switch
5. Caution/warning panel
6. Fire detector test button
7. Caution/warning panel test switch
8. Audio control panel
9. Audio NORM/EMERG switch
10. Altimeter
11. Marker beacon panel
12. Instantaneous Vertical Speed Indicator (IVSI)
13. Radar altimeter
14. Radio magnetic indicator (RMI)
15. Horizontal Situation Indicator (HSI)
16. Attitude indicator
17. Airspeed indicator
18. DME master indicator
19. TACAN TEST switch
20. Turn and slip indicator
21. Fuel valve switch
22. CLEAR CHIP indicator switch
23. Pitch actuator position indicator
24. Roll actuator position indicator
25. Yaw actuator position indicator
26. Alternate static source knob
27. Vent knob
28. Voltmeter panel and miscellaneous switches
29. Clock
30. Dual tachometer
31. Torquemeter
32. Turbine Outlet Temperature indicator (TOT)
33. Gas producer tachometer
34. Voltmeter
35. GPS panel
36. GPS panel
37. GPS
38. VHF COMM 2
39. NAV 1
40. Transponder (XPDR)
41. ADF
42. AFCS controller
43. UHF COMM 1
44. Lower cb panel
45. Fuel pressure indicator/loadmeter
46. Fuel quantity indicator
47. Transmission oil temperature and pressure indicator
48. Engine oil temperature and pressure indicator
49. Altimeter
50. Marker beacon light adapter
51. Instantaneous Vertical Speed Indicator (IVSI)
52. Radar altimeter
53. Vent knob
54. Compass slaving adapter
55. Environmental control panel
56. Course Deviation Indicator (CDI)
57. Radio Magnetic Indicator (RMI)
58. Attitude indicator
59. Airspeed indicator
60. DME slave indicator
61. Turn and slip indicator

Figure 2-3. TH–57C Instrument Panel (Sheet 2)

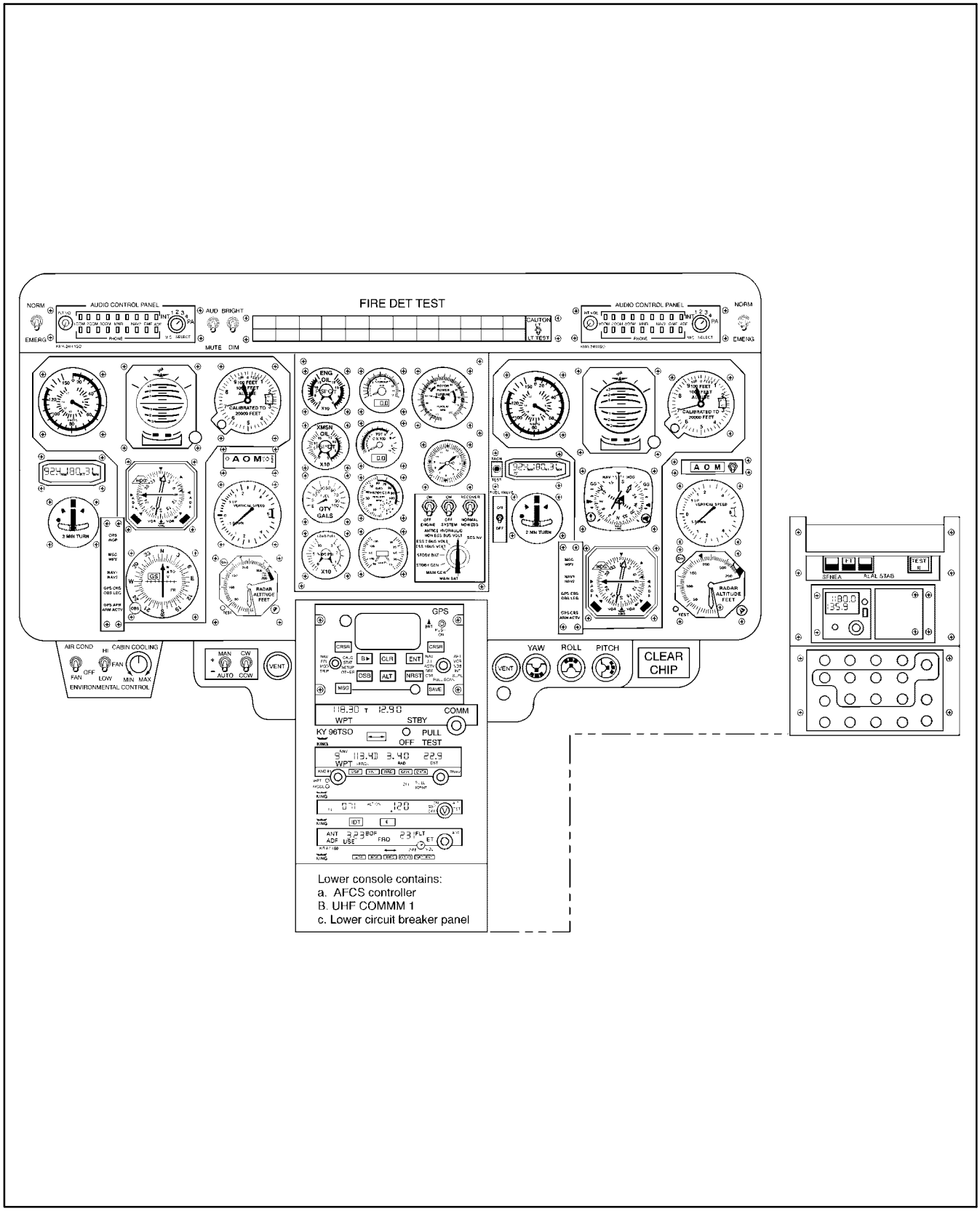

Figure 2-4. TH–57C/GPS Instrument Panel

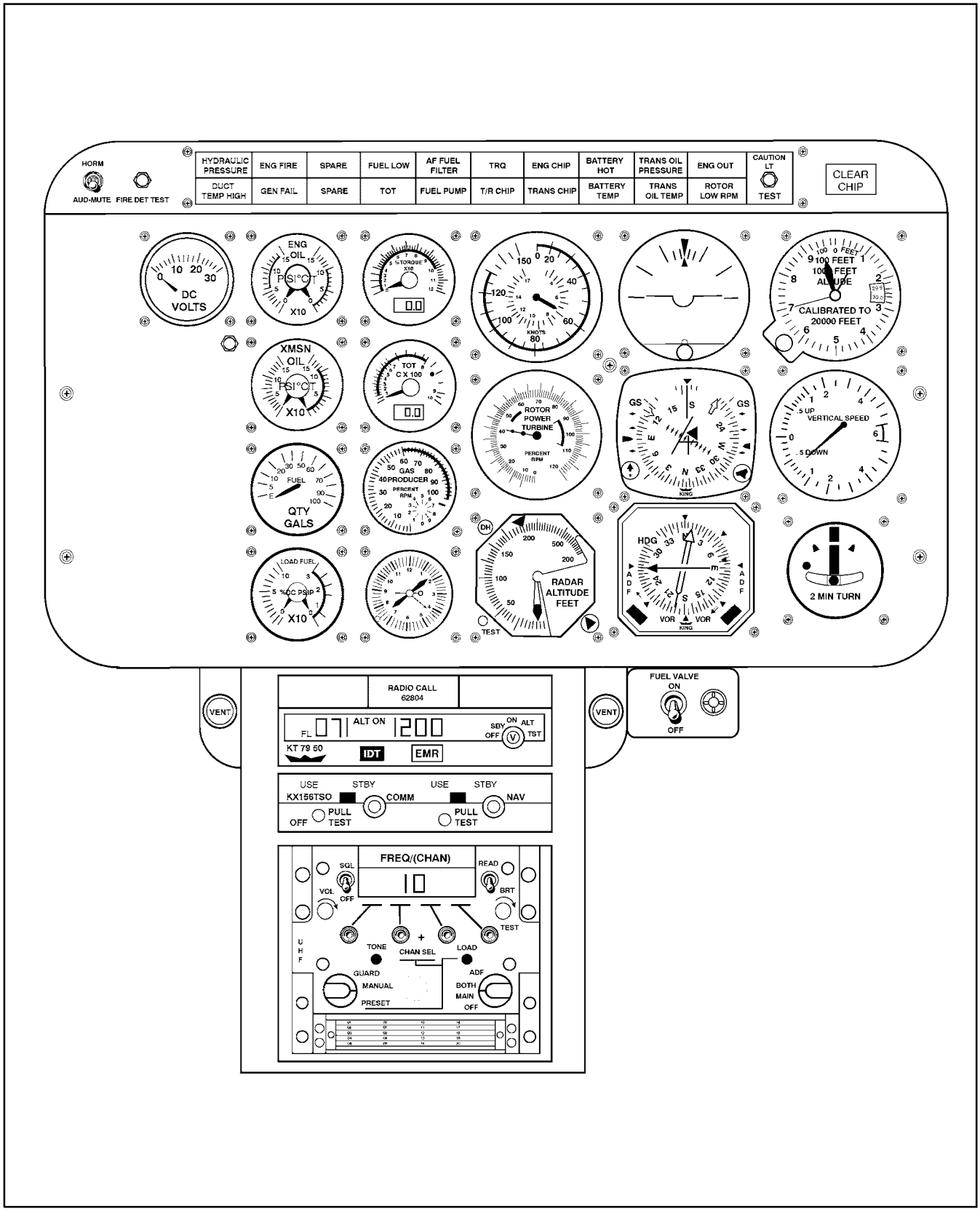

Figure 2-5. TH–57B Instrument Panel (Sheet 1 of 2)

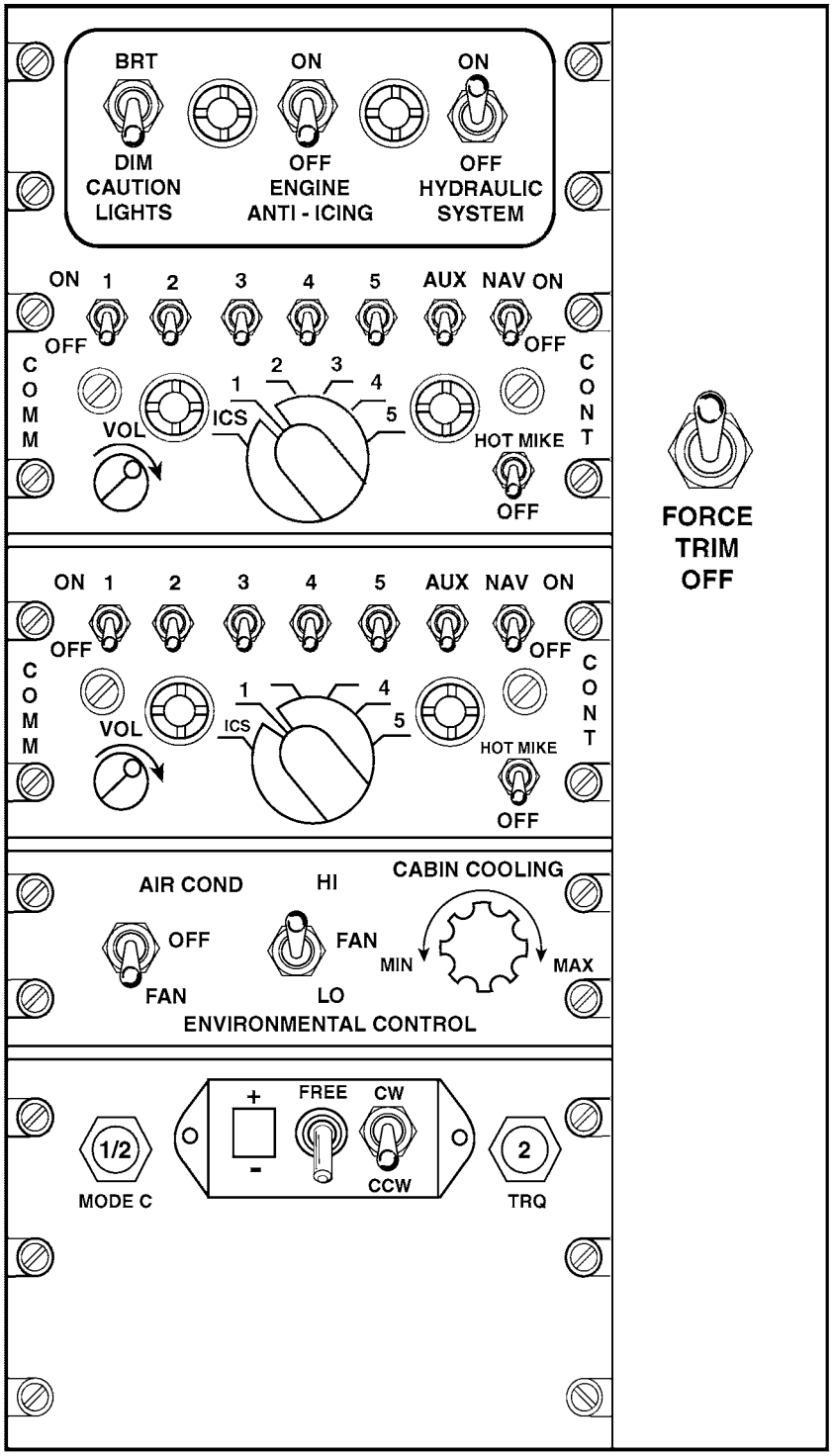

Figure 2-5. TH–57B Instrument Panel (Sheet 2)

If current indicated torque is less than 5 percent, the digital display will display the following additional information:

4. Flight Operational Exceedance Count Label _OEC is displayed, followed by the count.
5. Inspection Exceedance Label _IEC is displayed, followed by the count.
6. Rebuild and Overhaul Exceedance Label _AEC is displayed, followed by the count.
7. Engine Exceedance Label _EEC is displayed, followed by the count.

After the instrument has played back the recorded data, normal operation of the digits begins.

2.1.6.2 Turbine Outlet Temperature Indicator

The Turbine Outlet Temperature (TOT) indicator (Figures 2-3, 2-4, and 2-5) is marked TOT. The indicator receives temperature indications from four bayonet–type thermocouples mounted on the turbine section between the N_f and N_g turbines. The four thermocouples relay an average indication to the TOT indicator in the cockpit. The indicator is graduated in degrees Celsius, is protected by the TOT IND circuit breaker, and requires electrical power for operation.

The TOT gauge has two operational modes: engine start and flight operational mode.

To warn the pilot of a potential overtemperature condition, the digital display and associated TOT caution light will flash on and off once per second when the indicated temperature goes above 810 °C in start and operational modes. The digital display and associated TOT caution light will stop flashing when the indicated temperature goes below 810 °C.

If an overtemperature exceedance does occur (on start: 810° to 927 °C for 10 seconds or greater than 927 °C; operationally: 810° to 843 °C for 6 seconds or greater than 843 °C), the digital display and associated TOT caution light will flash on and off twice per second as long as the TOT is in exceedance. Once TOT falls below 810 °C, the TOT caution light will extinguish; however, the digital display will continue to flash twice per second for 1 minute to ensure the pilot is aware of the overtemperature condition. The 1–minute timing is started after the indicated temperature goes below 810 °C. After 1 minute, the TOT gauge will operate normally until the TOT limits are exceeded again or the indicated temperature goes below 360 °C, in which case the digital display will resume flashing twice per second.

Each time the TOT gauge is powered up, the digital display plays back the data stored in nonvolatile memory (during this time, the instrument needle will indicate current engine temperature). Each parameter played back is preceded by a label identifying the data type. During playback, each display frame is displayed for 2 seconds, except when stated otherwise. The data is played back in the following order:

1. All segments display 888 to verify all display elements are functioning.
2. Engine Start Label (S__) is displayed if no start mode exceedance has occurred since the last time the instrument was reset; otherwise, the Start Exceedance Label S_E is displayed flashing on and off twice per second for 10 seconds.
3. The maximum temperature on an engine start event since the instrument was last reset is displayed, followed by the time in seconds the temperature was above 810 °C. If the temperature was not over 810 °C, a 0 for 0 seconds is displayed.
4. The Flight Operation Label O_ _ is displayed if no operational exceedance has occurred since the last time the instrument was reset; otherwise, the Operational Exceedance Label O_ E is displayed flashing on and off twice per second for 10 seconds.
5. The maximum operational temperature since the instrument was last reset is displayed, followed by the time in seconds the temperature was above 810 °C. If the maximum temperature was not above 810 °C, the highest operational temperature is displayed for 0 seconds.

If the current TOT is less than 360 °C, the following additional information will be displayed:

6. Start Cycle Count Label SC_ is displayed, followed by the start count.
7. Engine Start Exceedance Count Label SEC is displayed, followed by the count.
8. Operational Exceedance Count Label OEC is displayed, followed by the count.
9. The most recent Flight Label F_1 is displayed, followed by the average temperature and duration of this flight where the indicated temperature was above 738 °C and the time in minutes.
10. Repeat step 9. from previous flights F2 to F4.

After the instrument has played back the recorded data, normal operation of the digits begins.

2.1.6.3 Gas–Producer Tachometer

The Gas–producer (N_g) tachometer indicator (Figures 2-3, 2-4, and 2-5), located on the instrument panel, reads percent rpm of the gas–producer turbine speed. This indicator is powered by the gas–producer tachometer–generator mounted on the forward right side of the engine and requires no other electrical power for operation.

2.1.6.4 Dual Tachometer

The dual tachometer indicator located on the instrument panel (Figures 2-3, 2-4, and 2-5) indicates both the power turbine and main rotor rpm readings in percent. The needle marked T indicates power turbine rpm (N_f), and the needle marked R indicates main rotor rpm (N_r). This instrument receives its inputs from two tachometer–generators. These generators are self–generating and are not connected to the electrical system. The N_r tachometer–generator is mounted on the hydraulic reservoir on the forward left side of the transmission.

2.2 OIL SUPPLY SYSTEM

The engine lubrication system (Figure 2-6) is a circulating dry sump with an external oil tank and oil cooler. This system is designed to furnish lubrication, scavenging, and cooling as needed for bearings, splines, and gears regardless of helicopter attitude or altitude. Lubrication is provided to all bearings in the compressor, gas–producer turbine, and power turbine, and to bearings and gear meshes in the power turbine gear train with the exception of the power output shaft bearing. The power output shaft bearings are lubricated by an oil mist. A spur gear oil pump assembly, consisting of one pressure element and four scavenge elements, is mounted within the engine accessory gearbox. Oil from the tank is delivered to the pressure pump that pumps oil through the oil filter and to various points of lubrication. The system pressure is adjusted to a maximum of 130 psi by the pressure–regulating valve. The oil system maintains this relatively high pressure in order to balance high axial gear thrust in the torquemeter. This high thrust value is necessary to minimize friction effects and provide accurate measurement of torque. The oil filter, filter bypass valve, and pressure–regulating valve assembly are located in the upper right side of the accessory gearbox. A check valve is located in the oil filter outlet passage. Two chip detector elements, the scavenge oil outlet chip detector, and the accessory gearbox chip detector are located on the accessory gearbox section of the engine and illuminate the ENG CHIP caution light on the instrument panel should they detect metallic filings in the sumps. The cooler fan is mounted on the upper structure, aft of the aft firewall, and is driven by the tail rotor drive shaft. The squirrel–cage–type impeller is mounted on a flanged shaft that is mounted in bearing hangers. The fan shaft connects to the forward and aft short tail rotor drive hafts and is part of the tail rotor drive shaft system. The oil cooling fan provides cooling air for the engine oil system, the transmission oil system, and the hydraulic system.

2.2.1 Engine Oil Temperature Gauge

The engine oil temperature gauge, co–located with the engine oil pressure gauge, is located on the instrument panel (Figures 2-3, 2-4, and 2-5) and indicates the temperature of the engine oil in degrees Celsius. The gauge is connected to an electrical resistance–type bulb located in the engine oil tank. The oil temperature gauge is protected by the ENG XMSN IND circuit breaker.

2.2.2 Engine Oil Pressure Gauge

The engine oil pressure gauge, co–located with the engine oil temperature gauge, is located on the instrument panel (Figures 2-3, 2-4, and 2-5). Engine oil pressure is a direct–reading, wet–line system requiring no electrical power for operation. Pressure readings are indicated in psi.

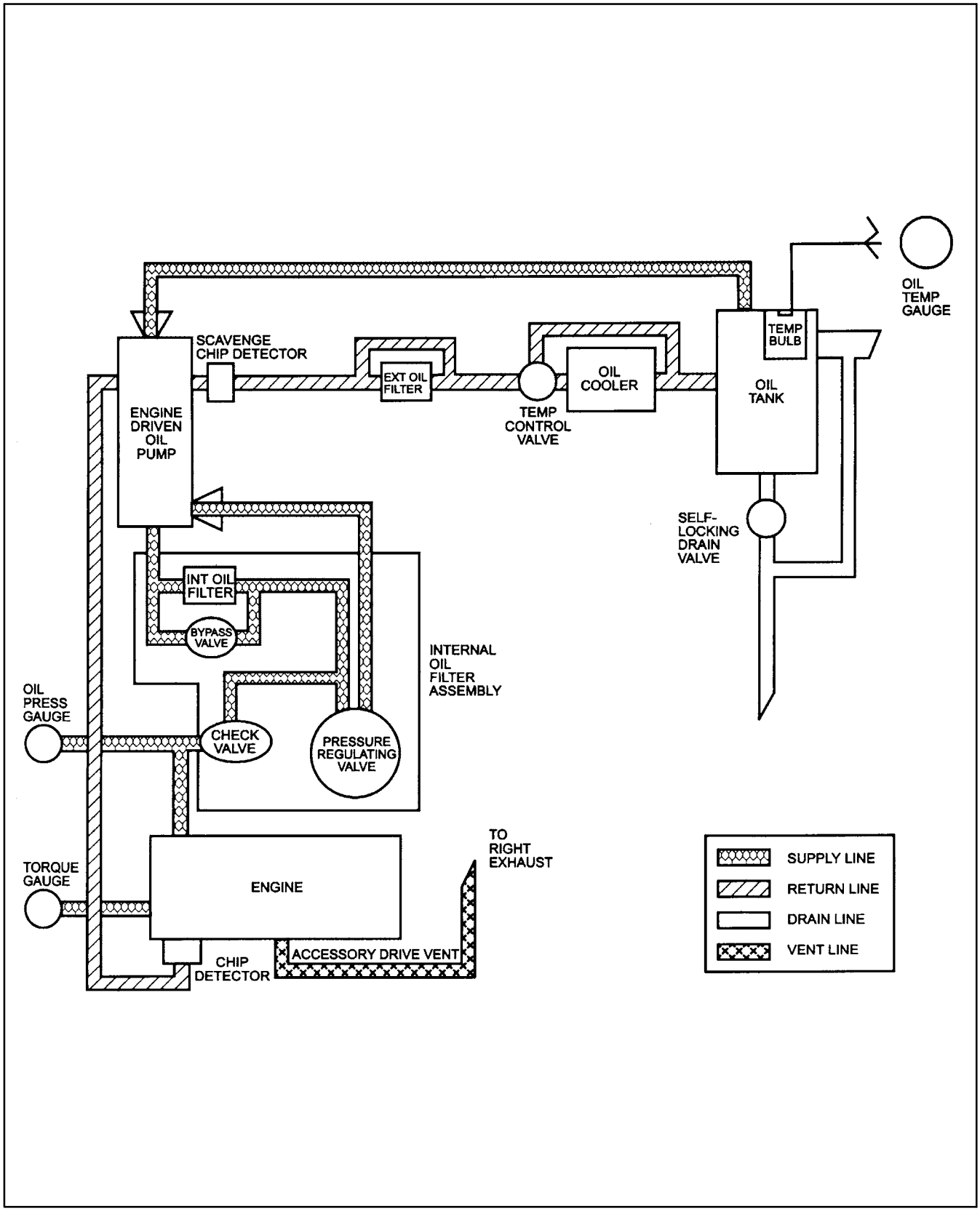

Figure 2-6. Engine Oil System

2.2.3 Airframe–Mounted Oil Filter System

The engine external scavenge oil filter system is located beneath the aft fairing immediately aft and left of the engine oil supply tank. The filter system incorporates a 10–micron, disposable, pleated paper filter element that reduces the chance of premature engine failure by maintaining a cleaner oil supply and removing minute carbon and ferrous particles. The filter system has a red, pop–out, bypass indicator that can be viewed through the inspection door near the oil supply tank sight gauge.

2.3 DRIVE TRAIN

2.3.1 Engine to Transmission Drive

A barbell–shaped drive shaft with flexible splined couplings at each end is installed between the freewheeling unit coupling on the engine and transmission input adapter flange.

2.4 FREEWHEELING UNIT

The freewheeling unit is bolted to the engine accessory gearbox and is driven from the power output shaft of the engine. The forward end incorporates a sprague clutch that drives the main transmission/tail rotor drive shaft when under power. The sprague clutch allows the main transmission and tail rotor drive shaft to continue to turn when the engine drive shaft rpm falls below the transmission drive shaft rpm. Oil is fed from the transmission oil system through lines and a filter to the freewheeling unit. Centrifugal force throws oil out and into the case and sump. A chip detector is located in the freewheeling unit oil supply. If metallic chips are detected, the TRANS CHIP light on the caution panel will illuminate.

Note

Ensure oil level on the first flight of the day is at or below the center bull's–eye; an air bubble must be visible on subsequent flights. Prior to starting, if the transmission oil level appears to be low, oil may have drained from the transmission to the freewheeling unit.

2.5 ROTOR SYSTEM

2.5.1 Main Rotor

The main rotor assembly is a two–bladed, semirigid, flapping–type rotor with underslung mounting. The semirigid blade feature provides rotor stability and rigidity with low flight control loading. The main rotor blade is of all–metal construction, consisting of an aluminum–alloy honeycomb core and aluminum skin and nose block. The rotor blade midspan and tip weights provide excellent high–rotational inertia, enhancing autorotational characteristics. The asymmetrical (droop snoot) cross–section design of the blade enables high rotational velocity with minimum vibration and improved blade stall characteristics. Each blade is twisted 5°, having more pitch at the root than at the tip, in order to achieve a more even spanwise distribution of lift. Each blade is attached to the blade grip by a vertical through–bolt. These bolts have hollow shanks to permit the installation of lead weights to balance the hub and blade assembly. The blades are positioned 180° from each other by a horizontal latch bolt. Two and one–fourth degrees of preconing are built into the main rotor hub and blade assembly to relieve bending moments at the blade root. Blade grips are retained on the hub yoke by means of tension–torsion straps. Flap restrainers are installed on top of the hub to limit the amount of rotor flapping at low rpm. Static stops limit excessive blade flapping at operational rpm. Grease fittings are installed on blade grips and pillow blocks for lubrication. The semirigid, underslung rotor hub is of the universal type. Movement of the collective causes the blades to change pitch by rotating the blade grips about their pitch change bearings. Cyclic action, through tilting the swashplate, tilts the rotor disk. In the semirigid system, the blades do not change pitch independently with respect to the swashplate. The entire system changes position in relation to the original plane of rotation. Pitch change horns lead the blades by 90° to allow for phase lag. Flapping of the rotor compensates for dissymmetry of lift. The blades do not flap independently in a semirigid system. N_r at 100 percent is 394 rpm.

2.5.2 Tail Rotor

The tail rotor assembly is a two–bladed, semirigid system. The tail rotor hub and blade assembly consists of an aluminum alloy forged yoke and stainless steel metal blades. The blades are mounted in the yoke by means of spherical bearings that are mounted in the grip plates on the pitch change axis. The spherical bearings provide for pitch change of the blades. The yoke and blade assembly is mounted on the 90° gearbox shaft by means of a splined trunnion, mounted in bearings in the yoke, to provide a flapping axis for the assembly.

2.5.3 Tail Rotor Drive

The tail rotor drive shaft consists of eight sections connected by couplings that provide for drive shaft flexing and twisting. The first short shaft aft of the engine is made of steel. Splined couplings allow fore–and–aft travel. The second shaft, also made of steel, is fitted with a steel ring that drives the squirrel–cage oil cooling fan, and mated to the forward splined end of the second shaft is a pulley that drives the air–conditioner compressor. The subsequent tail rotor drive shafts are made of aluminum and have a steel adapter bonded to each shaft at each end.

2.5.4 Rotor Rpm Indicator

The rotor rpm indicator is part of the dual tachometer (Figures 2-3, 2-4, and 2-5) and is located on the instrument panel. The rotor rpm reading is indicated in percent rpm by the smaller pointer needle marked with an R. The indicator is powered by a tachometer–generator mounted on the hydraulic pump reservoir housing and driven by the transmission accessory drive. The indicator and tachometer–generator operate independently of the helicopter electrical system. The tachometer–generator is a variable output type: as rpm changes, the current output of the generator varies.

2.5.5 Rotor Brake (C)

The rotor brake assembly is mounted to the forward end of the freewheeling assembly. It provides a means of rapidly decelerating the rotor system after engine shutdown. A hand–operated lever, mounted adjacent to the pilot side of the overhead console, is used to apply the brake (Figure 2-7). Pulling the lever to the down position activates a master cylinder that applies hydraulic pressure to dual brake linings. The linings compress against a disk mounted with the main drive shaft coupling and decelerate the rotor system. The rotor brake hydraulic system is a separate and independent system. The master cylinder serves as the hydraulic oil reservoir and contains an oil filler cap through which the system is serviced. Located in the overhead between the pilots is a direct reading pressure gauge. Normal operation is indicated with a constant pressure of 100 to 120 psi, when engaged.

2.6 TRANSMISSION SYSTEM

The transmission is located forward of the engine on the cabin roof deck and is linked to the freewheeling unit coupling by means of a barbell–shaped drive shaft. The transmission is placed approximately at the midpoint of the center–of–gravity travel and is attached to the airframe by two pylon support links. A dual focal mount aligns the transmission and isolates vibrations. A spike is mounted beneath the transmission; rivets secure the spike–well plate to the transmission deck. Indications of rubbing, sheared rivets, or a loose spike–well plate provide a means of indicating damage resulting from excessive transmission movement. The two–stage planetary transmission system provides a gear reduction of 15.22:1. The transmission also drives an accessory drive shaft that powers the transmission oil pump, the hydraulic pump, and the rotor tachometer–generator. Two chip detector plugs are installed below the oil level sight gauge on the right side to detect metallic particles in the sump. If metallic chips are detected, the TRANS CHIP light on the caution panel will illuminate.

2.6.1 Transmission Oil System

The transmission is lubricated by a wet–sump system and is serviced from the upper right side of the transmission casing (Figure 2-8). Transmission oil pressure is provided by a self–contained system with the oil pump immersed in the sump. The pump is located at the lower end of the transmission and provides pressurized oil at 4.5 to 5 gallons per minute. The transmission oil pump also furnishes oil for the lubrication of the freewheeling unit that is mounted on the engine accessory gear case. A pressure line and a return line pass oil through the forward engine bulkhead to connect the transmission and freewheeling unit.

2.6.1.1 Transmission Oil Cooler

Oil temperature is automatically controlled by a thermostatically operated bypass valve that directs the flow of oil through the oil cooler when the oil is hot or around the oil cooler when cold. The oil then returns to the gearbox and is sprayed through jets onto the transmission gears and bearings.

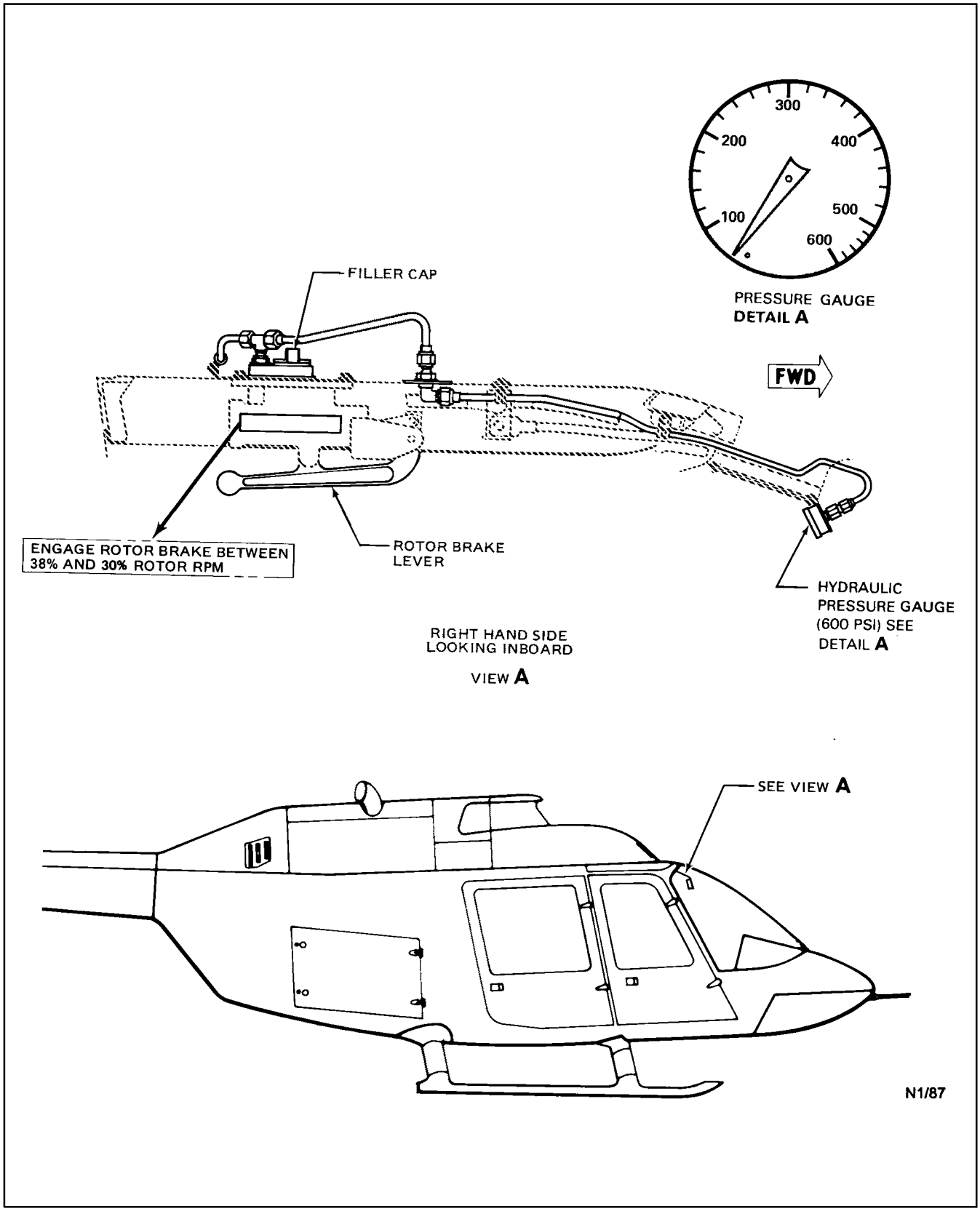

Figure 2-7. TH–57C Rotor Brake

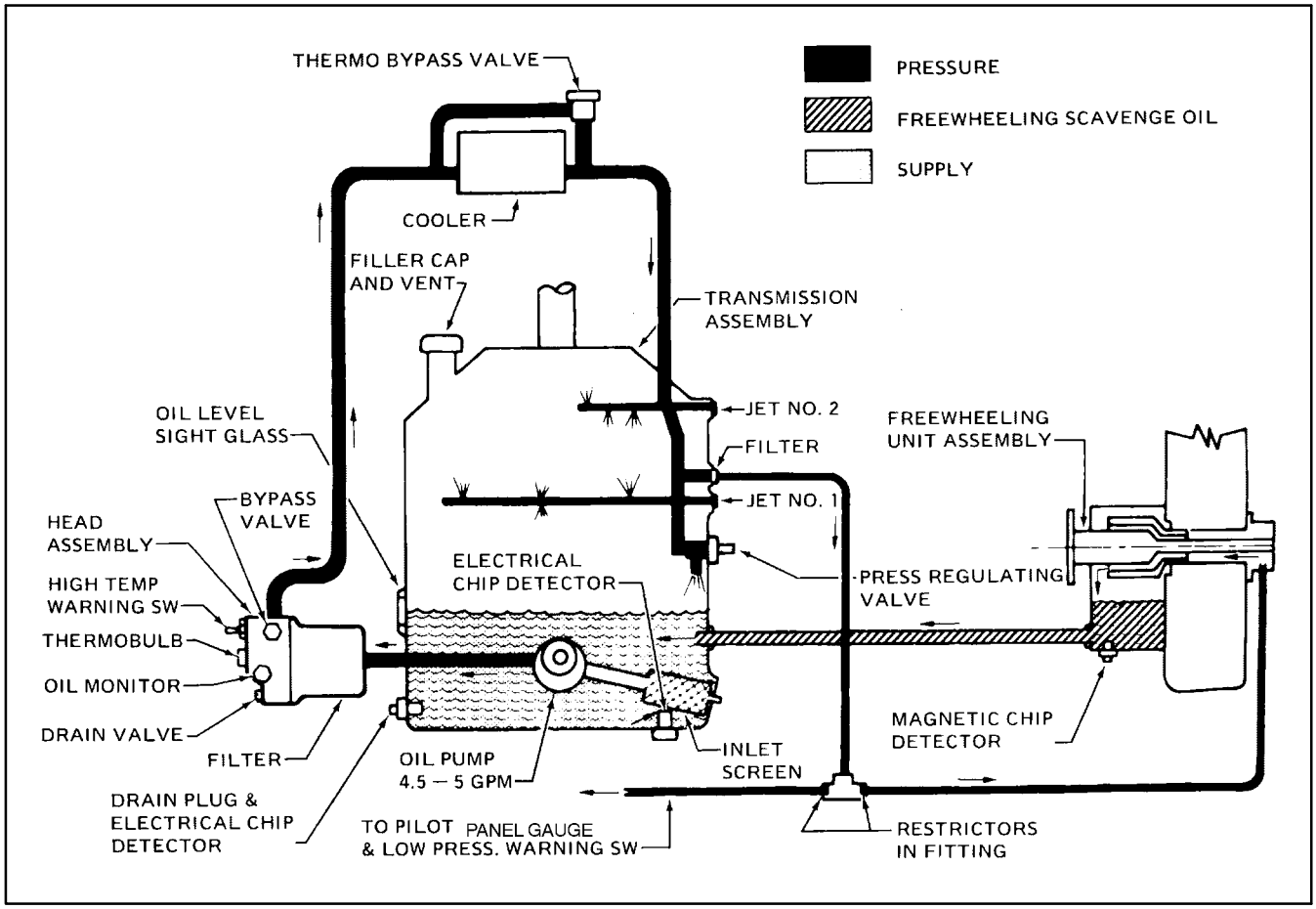

Figure 2-8. Transmission Oil System

2.6.1.2 Transmission Oil Pressure Gauge

The transmission oil pressure gauge, co–located with the transmission oil temperature gauge, is located on the instrument panel (Figures 2-3, 2-4, and 2-5). Transmission oil pressure is a direct–reading, wet–line system requiring no electrical power for operation. Pressure readings are indicated in psi.

2.6.1.3 Transmission Oil Pressure Caution Light

A caution light marked TRANS OIL PRESSURE is located on the caution light panel on the instrument console. The transmission oil pressure switch is installed in the transmission oil pressure indicator line and is connected to the caution light that illuminates when transmission pressure falls below 30 ±2 psi. The TRANS OIL PRESSURE caution light is protected by the CAUTION LT circuit breaker.

2.6.1.4 Transmission Oil Temperature Gauge

The transmission oil temperature gauge, located on the instrument panel (Figures 2-3, 2-4, and 2-5), is calibrated in degrees Celsius. An electrical resistance–type thermobulb located in the left side of the transmission transmits the oil temperature reading to the indicator unit. The transmission oil temperature gauge is protected by the ENG XMSN TEMP IND circuit breaker.

2.6.1.5 Transmission Oil Temperature Caution Light

The transmission oil temperature caution light marked TRANS OIL TEMP is located on the caution light panel on the instrument console. A transmission oil temperature switch located adjacent to the temperature bulb on the left side of the transmission closes when the temperature of the transmission oil rises above red line and illuminates the caution light. The TRANS OIL TEMP caution light is protected by the CAUTION LT circuit breaker.

2.6.1.6 Transmission Chip Detectors

Two electrical chip detectors are located on the lower transmission housing. A third electrical chip detector may be installed in the upper case. All chip detectors are connected to the TRANS CHIP caution light to give evidence of metal particles in the transmission lubrication system. The TRANS CHIP caution light is protected by the CAUTION LT circuit breaker.

2.7 TAIL ROTOR GEARBOX

The tail rotor gearbox provides a 90° change in the direction of tail rotor drive shaft drive and reduces the tail rotor shaft rpm 2.35 times. The magnesium gearbox has a sight gauge installed to determine the oil level and a magnetic drain plug with a chip detector. The tail rotor gearbox contains three-eighths of a pint of oil and is splash lubricated. A magnetic chip detector is located in the lower section of the tail rotor gearbox and gives evidence of ferrous metal particles in the tail rotor gearbox. The chip detector is wired to the T/R CHIP caution light. The caution light is activated when a sufficient amount of metal particles have collected on the chip detector to close the circuit. The T/R CHIP caution light is protected by the CAUTION LT circuit breaker.

2.8 FUEL SUPPLY SYSTEM

The fuel system (Figure 2-9) has a single bladder-type fuel cell located below and aft of the passenger seats. The fuel cell is gravity or pressure filled from the right side of the fuselage. Two electrically operated fuel boost pumps are located in the bottom of the fuel cell. The pumps are interconnected and furnish fuel through a single supply line to the engine-driven fuel pump. The boost pumps are equipped with a check valve, a pump drain port, a seal drain port, an intake screen, and a pump operating a pressure switch located in the pump discharge port. The pumps are controlled by two circuit breakers marked FUEL BOOST FWD and FUEL BOOST AFT located on the overhead console (Figure 2-10).

Note

- Due to possible fuel sloshing in unusual attitudes or out of trim conditions with one or both fuel boost pumps inoperative, the unusable fuel is 10 gallons.
- The engine is designed to operate without boost pump pressure under 6,000 feet PA and one boost pump will supply sufficient fuel for normal engine operations under all conditions of power and altitude.

Two float-type fuel level transmitting units are installed in the fuel cell. The lower unit is mounted in the bottom of the cell and measures fuel level up to the horizontal surface of the cell under the passenger seats. The upper unit is mounted on the top of the cell and measures the fuel level in the upper section of the fuel cell behind the passenger seats. Both transmitting units are connected to a common fuel quantity indicator. Unusable fuel in the aircraft is 1.03 gallons as indicated by “E” on the Fuel Quantity Indicator. The fuel filter assembly and single- or dual-element engine-driven fuel pump, which operates at 700 ±50 psi, are integral units mounted on the aft left end of the engine. Fuel enters the engine fuel system at the inlet port of the pump and passes through the filter before entering the gear elements of the pump. An electrically operated shutoff valve is installed in the main fuel supply line and is controlled by an ON-OFF switch located on the instrument panel (Figures 2-3, 2-4, and 2-5). In the event of electrical failure, the valve will remain in the position selected before failure.

2.8.1 Airframe-Mounted Fuel Filter

A fuel filter is mounted to the aft side of the forward firewall on the right side of the engine compartment to filter inlet fuel to the engine. The filter assembly consists of a replaceable filter element, a drain valve, a bypass valve, impending bypass switch, and manual test button. Indication of impending bypass lights the AF FUEL FILTER caution light on the caution panel.

2.8.2 Fuel Quantity Indicator

The fuel quantity indicator located on the instrument panel (Figures 2-3, 2-4, and 2-5) is calibrated in gallons. This unit operates from two float-type elements located in the upper and lower portions of the fuel cell and is protected by the FUEL/QTY/PRESS circuit breaker.

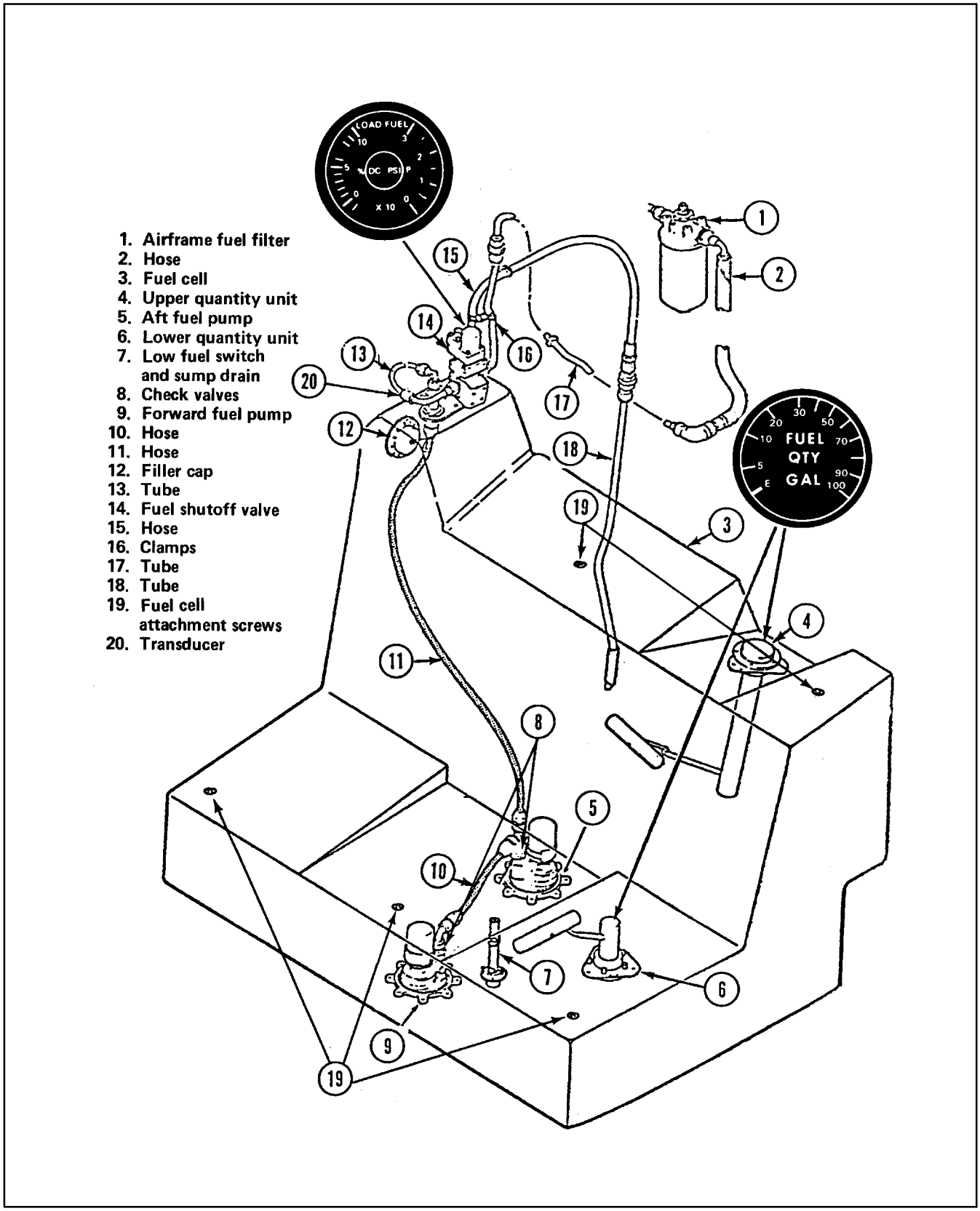

Figure 2-9. Fuel System

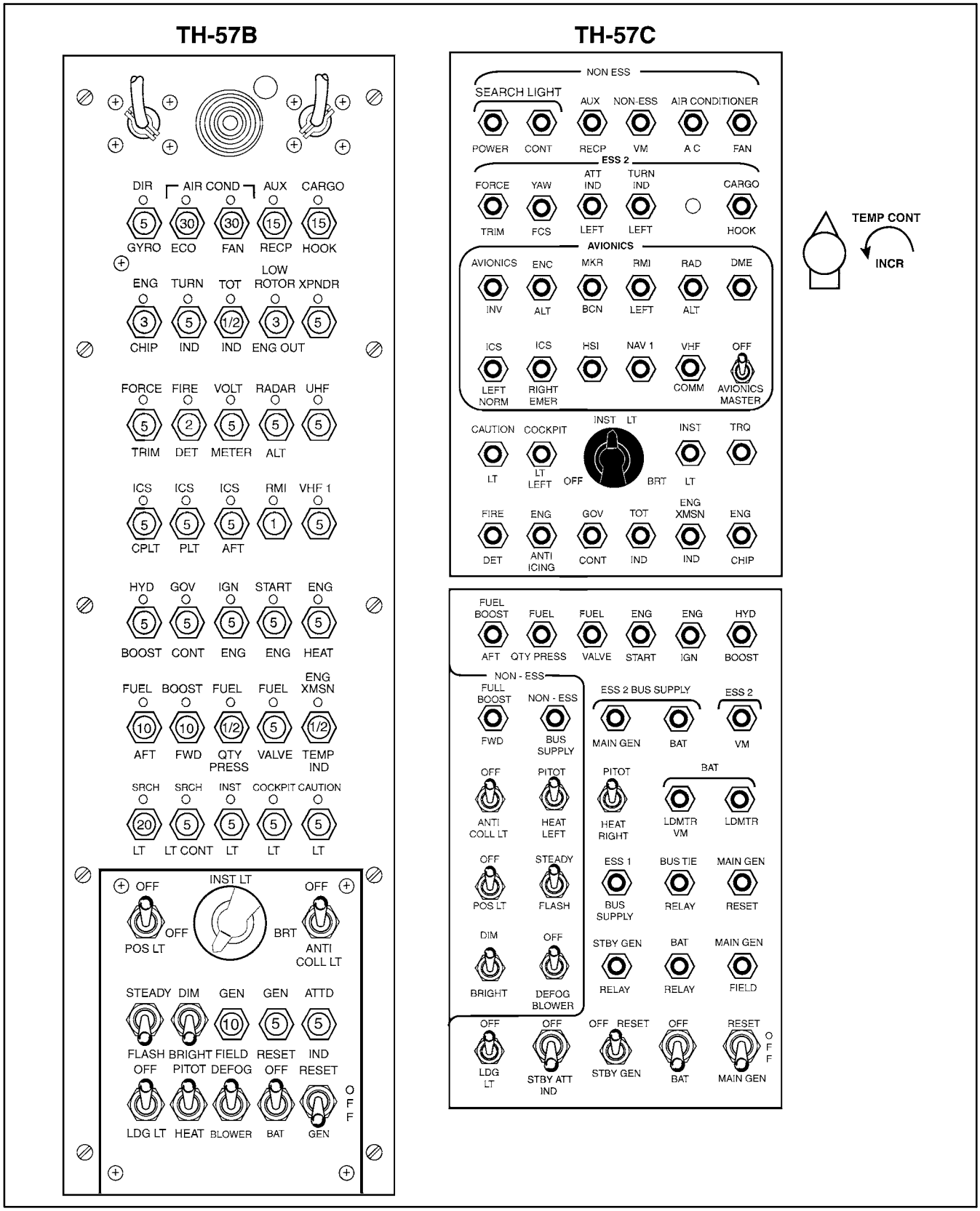

Figure 2-10. Overhead Circuit Breaker Panel and Switches

2.8.3 Fuel Pressure Indicator

The fuel pressure indicator located in the instrument panel (Figures 2-3, 2-4, and 2-5) provides fuel pressure readings as delivered from the tank–mounted fuel boost pumps to the engine–driven fuel pump. The indicator is connected to a pressure transmitter and protected by the FUEL/QTY/PRESS circuit breaker.

Note

On aircraft equipped with a solid–state fuel pressure transducer, keying the VHF radio may cause a fluctuation in fuel pressure indications. This fluctuation is only in indicated fuel pressure and is caused by Receiver Transmitter (RT) interference because of the position of the VHF antenna.

2.8.4 Fuel Pump Caution Light

The FUEL PUMP caution light is located on the caution panel and illuminates if pressure from either boost pump falls below 3.5 psi. The caution light is protected by the CAUTION LT circuit breaker.

2.9 ELECTRICAL POWER SYSTEM

2.9.1 TH–57B General Description

The Direct Current (dc) electrical system is a 28–Vdc system containing a 24–volt battery, a starter–generator, a voltage regulator, relays, circuit breakers, and a reverse current relay. Power is distributed through a single bus system (Figure 2-11). The various switches and circuit breakers are mounted on the overhead console (Figure 2-10). External power may be applied through a receptacle located on the forward section of the fuselage. The reverse current relay prevents the generator from being connected to the line until reaching operating voltage. It also holds the generator on the line unless voltage drops to a level where continued operation would be detrimental to equipment, prevents reverse current flow, and protects against overloading the generator. The dc common bus powers flight and navigational equipment and receives power from the main generator. In the event of a main generator failure, the battery will power the bus.

2.9.2 TH–57C General Description

The dc electrical system is a 28–Vdc system containing a 24–volt main battery, a 22.5–volt dry cell nickel–cadmium standby battery, a starter–generator, a standby generator, voltage regulators, relays, circuit breakers, and a reverse current relay. Power is distributed through a three–bus system containing an essential No. 1 bus, essential No. 2 bus, and a nonessential bus (Figure 2-12). The various switches and circuit breakers are mounted on the overhead console and the center pedestal (Figures 2-10 and 2-13). External power may be applied through a receptacle located on the forward section of the fuselage. The reverse current relay prevents the generator from being connected to the line until reaching operating voltage. It also holds the generator on the line unless voltage drops to a level where continued operation would be detrimental to equipment, prevents reverse current flow, and protects against overloading the generator.

The essential No. 1 bus powers a minimum of flight and navigational equipment necessary for flight. This bus receives power from the main generator. The standby generator will power the essential No. 1 bus in the event of a main generator failure, or the battery will power the bus in the event the latter two sources are inoperative. In the event of a total loss of power to the essential No. 1 bus, the standby battery will provide emergency power to the pilot attitude indicator only.

The remaining flight and navigational equipment receives power through the essential No. 2 bus. This bus is powered by the main generator, with the aircraft battery as a backup in the event of a main generator failure.

The remaining equipment is powered through the nonessential bus. This is normally powered by the main generator, with the battery as a backup. With the NORMAL–RECOVER switch in the NORMAL position, this bus will automatically be disconnected in the event of a main generator failure. Placing this switch in the RECOVER position will bring the nonessential bus back on line (Figure 2-14). Distribution to the various buses is shown in Figure 2-15.

2.9.3 Voltage Regulator

The voltage regulator is adjustable. It is set at a minimum of 28.5 volts during cold–weather operations and 27 volts during warm weather.

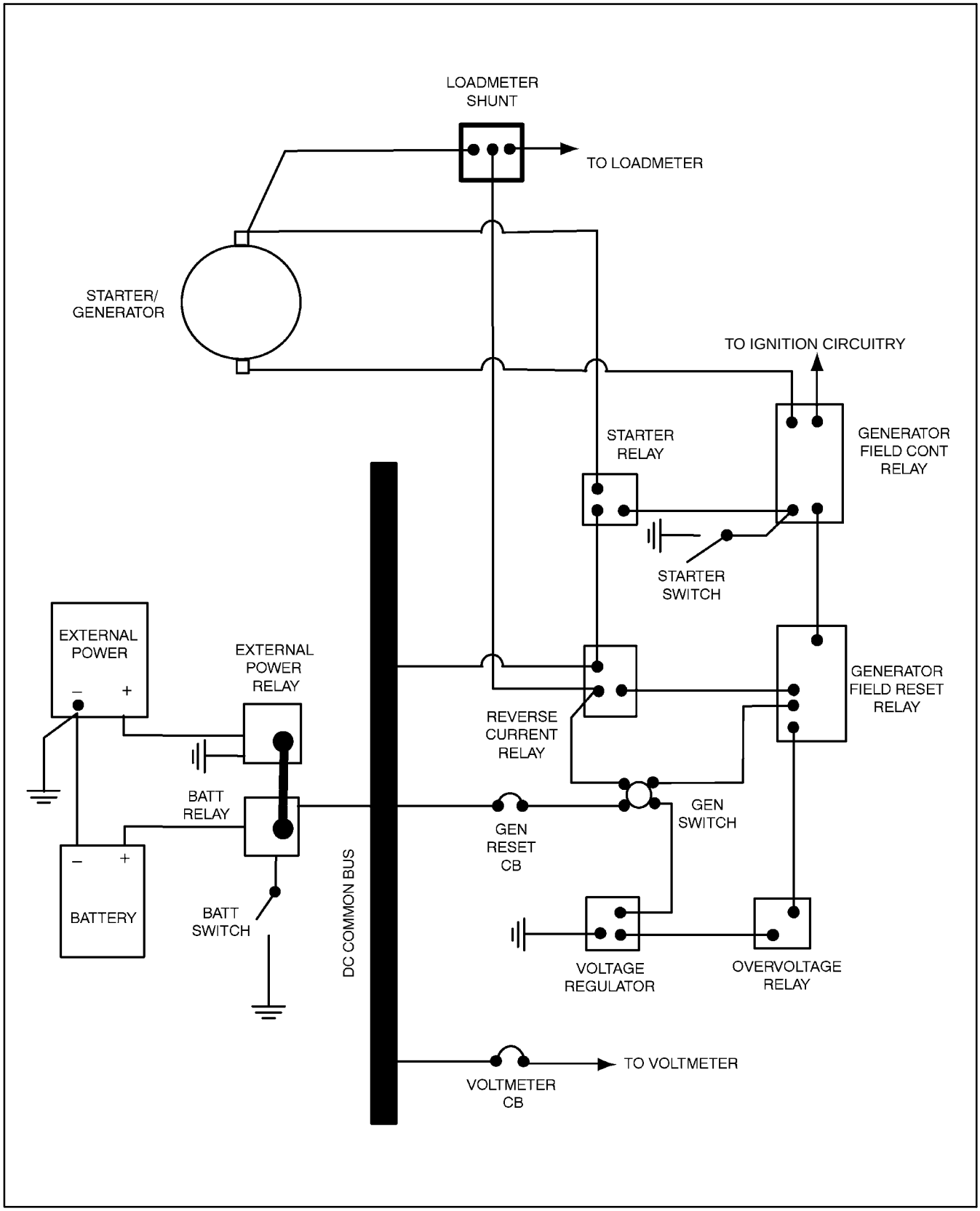

Figure 2-11. TH–57B Electrical System Schematic

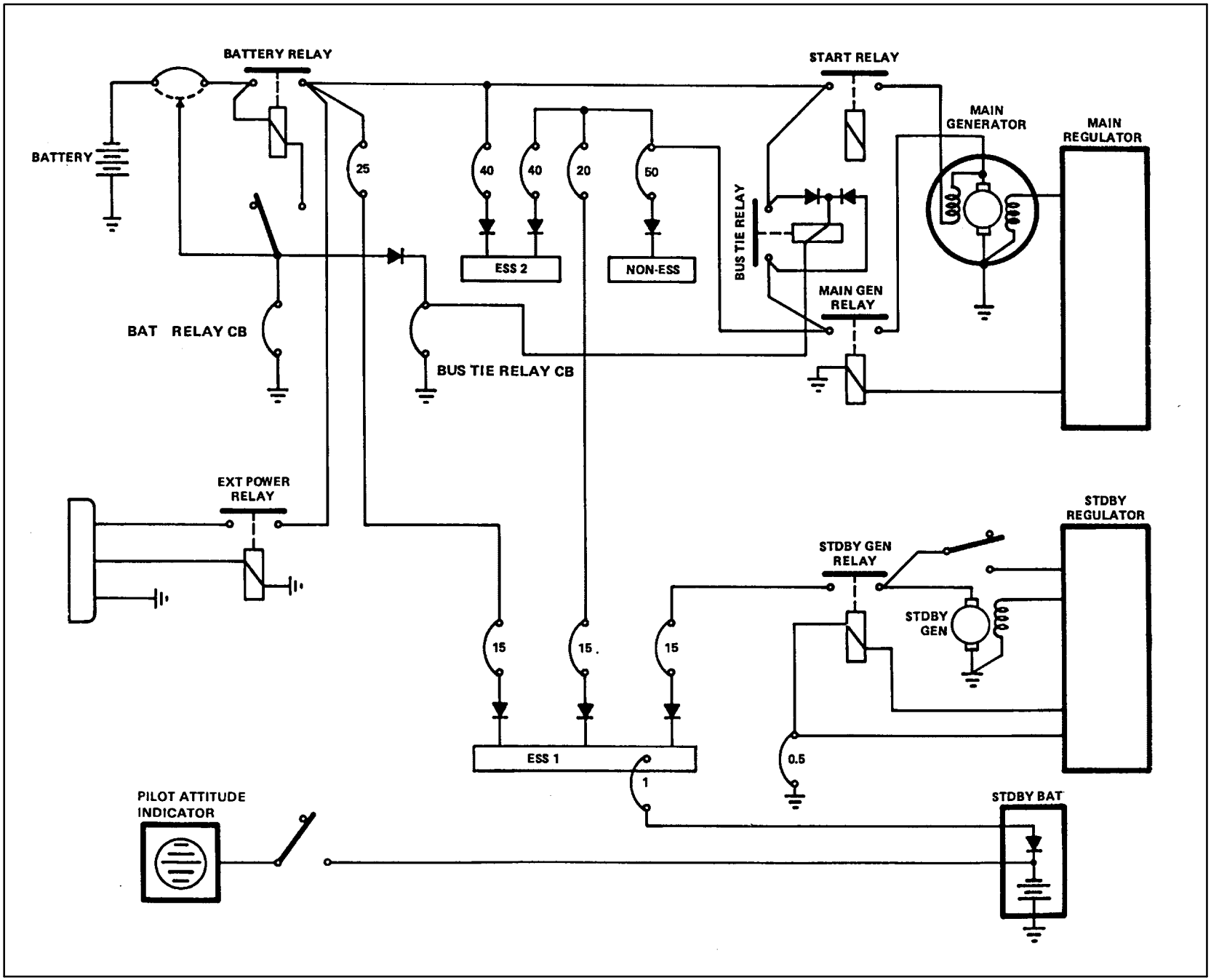

Figure 2-12. TH–57C Electrical System Schematic

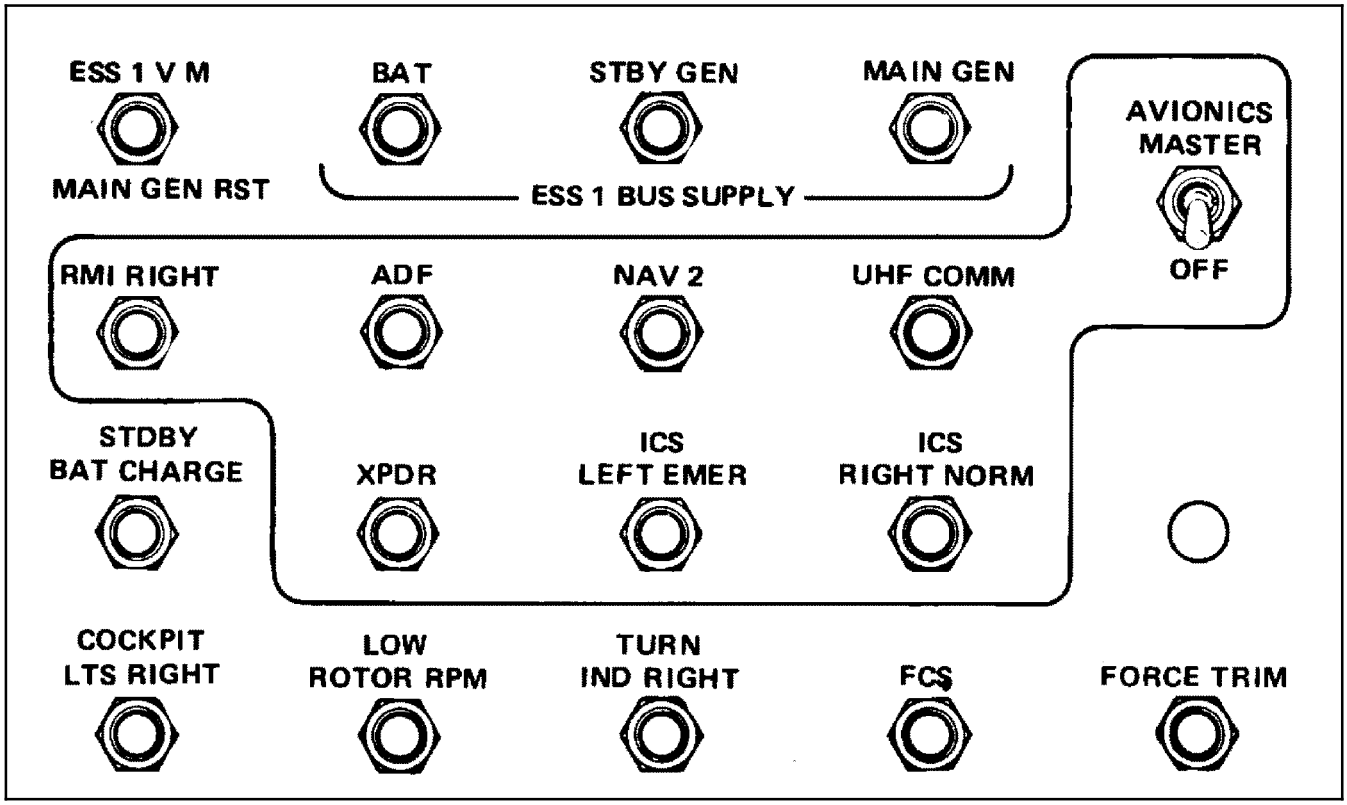

Figure 2-13. TH-57C Pedestal Circuit Breaker Panel and Switches

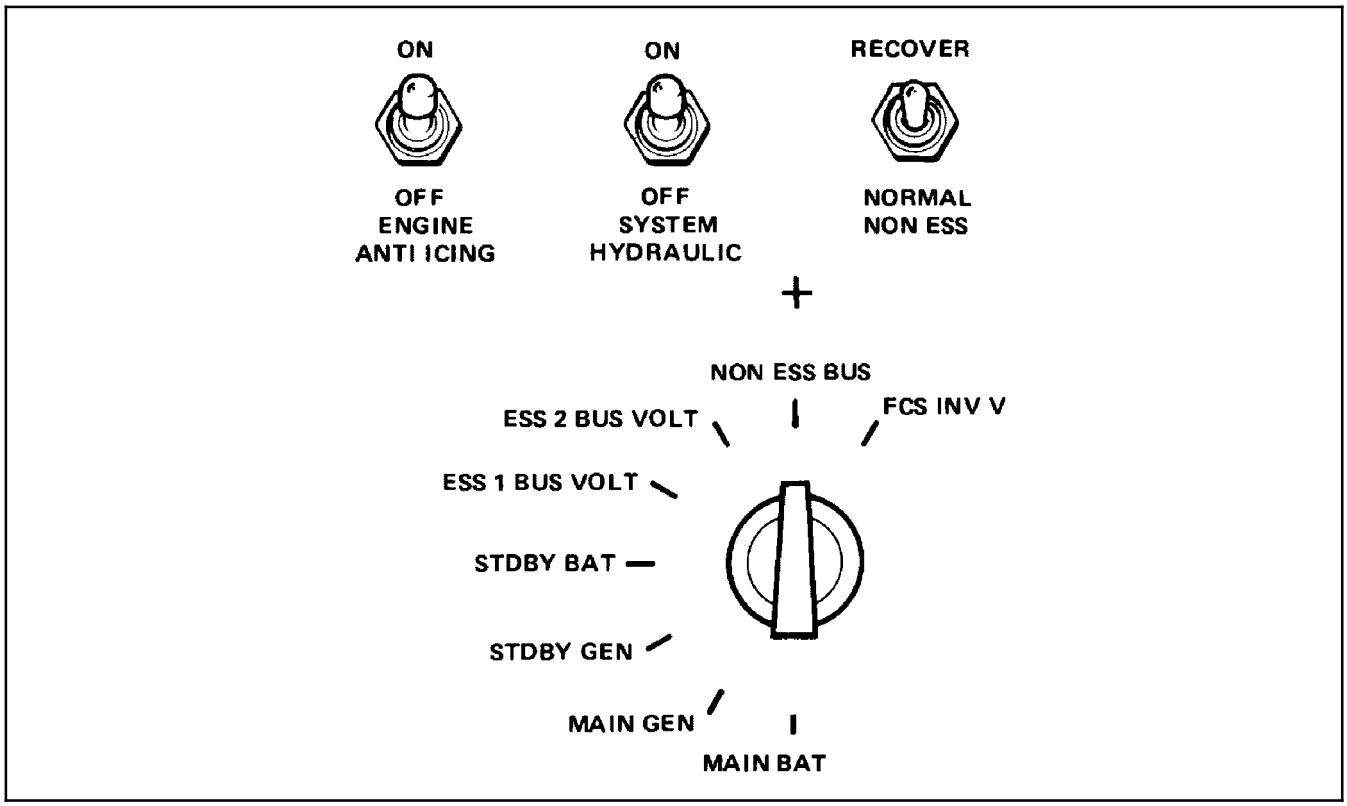

Figure 2-14. TH-57C Voltmeter Panel and Miscellaneous Switches

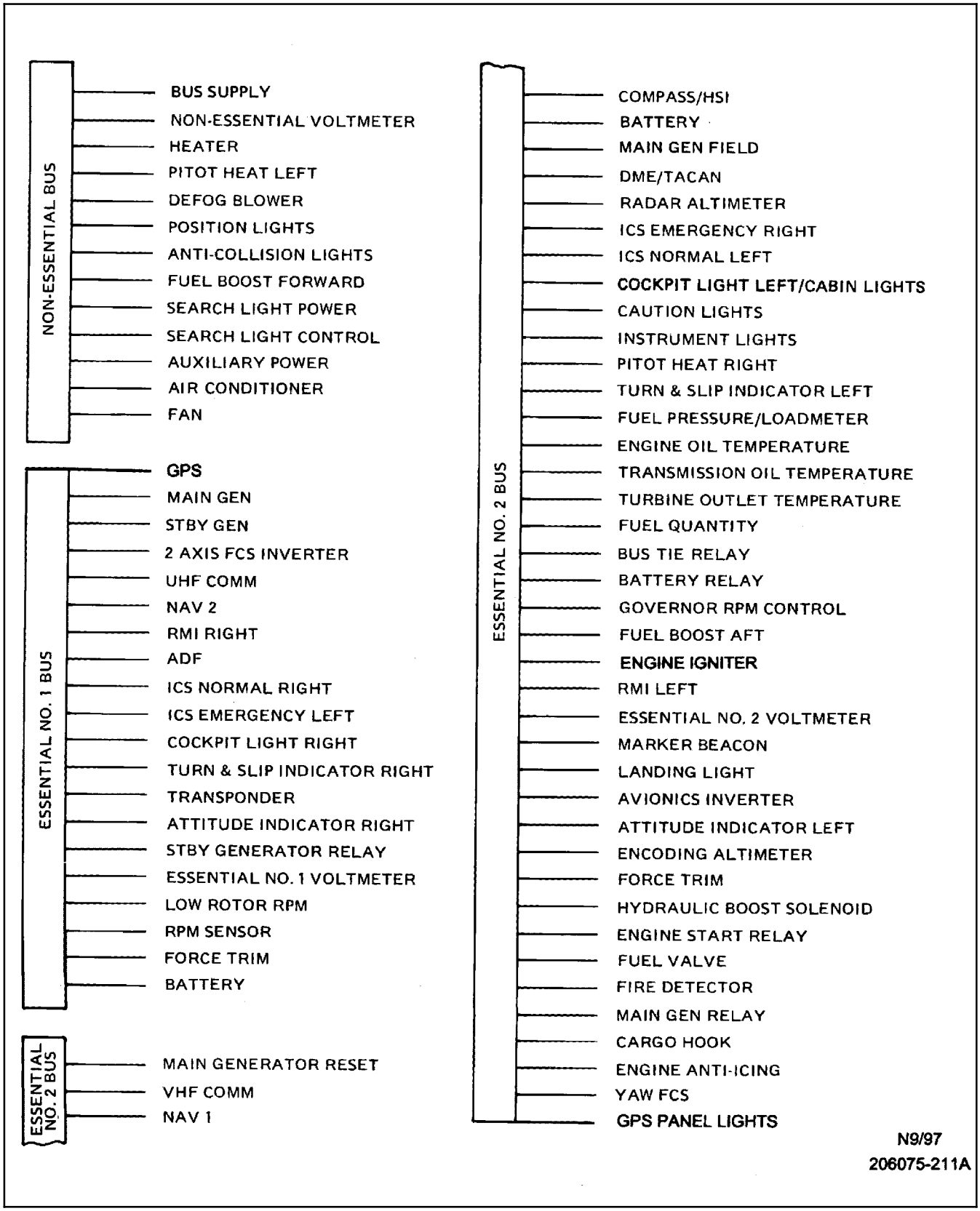

Figure 2-15. TH-57C Electrical Bus Distribution

2.9.4 Starter-Generator System

The 30 volt, 150-amp starter-generator, which is regulated to 28 volts and 105 amps, is located on the underside of the engine to the right of the helicopter centerline. This unit is used to start the engine, charge the battery, and supply power for the operation of dc electrical equipment. When the starter is energized, a circuit is opened from the regulator to the generator, isolating the generator from the electrical system. The igniter, a capacitance-type plug, operates only when the starter is energized. Ignition is self sustaining after the starter switch is released. The generator field control relay is located near the voltage regulator and closes the circuit to the engine ignitor for starting.

2.9.5 Standby Generator (C)

The standby generator provides an alternate source of power to the essential No. 1 bus in the event of a main generator failure. This is a 28-Vdc, 7.5-amp generator that is mounted on the accessory gearbox at the lower left auxiliary pad. Its associated voltage regulator is located in the hat rack area immediately behind the aft seat.

2.9.6 Battery Switch

The BAT switch is located in the overhead console and is a two-position toggle switch labeled BAT and OFF (Figure 2-10).

Battery electrical power is supplied to the helicopter electrical system when the switch is in the BAT position. When the switch is in the BAT position, it closes the circuit to the actuating coil of the battery relay and battery power is then being delivered from the battery to the dc common bus (TH-57B) or to the ESS 1 bus, ESS 2 bus, and non-ESS bus (TH-57C). When the switch is placed in the OFF position, it opens the circuit to the actuating coil of the battery relay and no power is delivered from the battery.

2.9.7 Dc Loadmeter

The dc loadmeter, mounted on the instrument panel (Figure 2-3), is co-located with the fuel pressure gauge and indicates the ampere load being used. The dc loadmeter is protected by two circuit breakers located in the aft electrical compartment.

2.9.8 Dc Voltmeter (B)

The dc voltmeter is located on the left side of the instrument panel and indicates battery or generator voltage.

2.9.9 TH-57C Ac and Dc Voltmeter

A combination alternating current (ac) and dc voltmeter panel (Figure 2-14) is located on the lower center area of the instrument panel (Figure 2-3). The indicated voltage corresponds to the battery, generator, inverter, or bus selected by the voltmeter selector knob (Figure 2-14). The Flight Control System (FCS) INV V position displays the ac voltage for the flight control system inverter. All other positions simultaneously display voltage of the selected dc component and voltage of the ac avionics converter.

2.9.10 Circuit Breaker Panel

The dc circuit breaker panel is located in the overhead console. In the TH-57C, an additional circuit breaker panel is located on the pedestal. Each individual circuit breaker is labeled for the particular electrical circuit protected. In the event a circuit is overloaded, the circuit breaker protecting that circuit will pop out. The circuit is reactivated by pushing the circuit breaker button. The switches on the overhead console (Figure 2-10), with round balls on their ends, have circuit breakers incorporated. In the event one of these circuits is overloaded, the switch will pop to the OFF position. The circuit is reactivated by turning the switch back on.

2.9.11 Battery

One 24-volt, 17-ampere-hour battery is installed. The battery is a sealed lead acid type. A door located in the nose section and hinged at the top provides access to the battery. The Sealed Lead Acid Battery (SLAB) consists of lead peroxide, spongy lead plates, and a sulfuric acid and water electrolyte. Starting efficiency for the battery decreases with a decrease in temperature.

2.9.11.1 Battery Overtemperature Indicator System

The battery overtemperature indicator system consists of two sensors located under the battery, two indicators located in the caution panel, and wiring to connect the sensors to the indicators.

When the battery heats to 54° ±3 °C, the BATTERY TEMP indicator will illuminate. When the battery heats to 60° ±3 °C, the BATTERY HOT indicator will illuminate.

2.9.11.2 Standby Battery (C)

The standby battery is a 22.5–volt, 1.8–ampere–hour dry cell battery located in the upper right rear area just aft of the baggage compartment rear bulkhead. This battery acts as an emergency source of power to the pilot attitude indicator and its integral lights in the event of a total electrical failure. The standby battery provides 1.5 hours of operation to the attitude indicator when fully charged.

Note

Turning the main battery off or with battery depletion with the STBY ATT IND switch on, will illuminate the STBY BATT ON light.

2.9.12 Inverters (C)

Alternating current is supplied by two static inverters. The inverters are solid–state units that take 28–Vdc input and produce 400–Hz, 115–Vac, and 26–Vac output. Both inverters are located on the forward equipment shelf above the baggage compartment. The inverters receive power from their respective dc buses through individual circuit breakers and have no separate inverter control switches; however, power to the avionics inverter along with various avionics equipment is controlled by the AVIONICS MASTER switch on the overhead circuit breaker panel (Figure 2-10).

The avionics inverter receives power from the essential No. 2 bus and is protected by the AVIONICS INV circuit breaker (Figure 2-9). The avionics inverters provide power to both RMIs, the NAV needles in the VHF Omnidirectional Range (VOR) mode, and the yaw channel of the AFCS. In the event of an avionics inverter failure, both RMIs will become inoperative and the NAV flag will be displayed. The NAV needles will point erroneously in the VOR mode, but will continue to give relative bearing information in the ADF mode. Yaw AFCS will also become inoperative. The avionics inverter of the ac/dc voltmeter will indicate the failure.

Both the HSI and the avionics inverter are powered by the No. 2 essential bus. The No. 2 essential bus is powered by the main battery in the event of a main generator failure. With battery exhaustion following a main generator failure, the HSI and both RMIs will be inoperative.

The FCS inverter receives power from the essential No. 1 bus and is protected by the FCS circuit breaker (Figure 2-13). The FCS inverter supplies power to the automatic flight control system.

2.9.13 Dc External Power Start Receptacle

A standard three–prong external dc receptacle is located below the forward battery access door. When a Ground Power Unit (GPU) is required for starting, the engine requires 28 Vdc at 400 amps. If a battery cart is required, normal battery requirements apply.

CAUTION

Extended operation with a GPU connected and battery switch ON can overcharge the battery with resulting battery damage. Operation with battery switch ON and GPU connected shall be used for starting only.

2.10 HYDRAULIC POWER SUPPLY SYSTEM

The hydraulic power supply system (Figure 2-16) is designed to reduce the operational loads through the cyclic and collective. The hydraulic power pack is mounted on the forward left side of the transmission and contains the hydraulic pump, reservoir, and regulator.

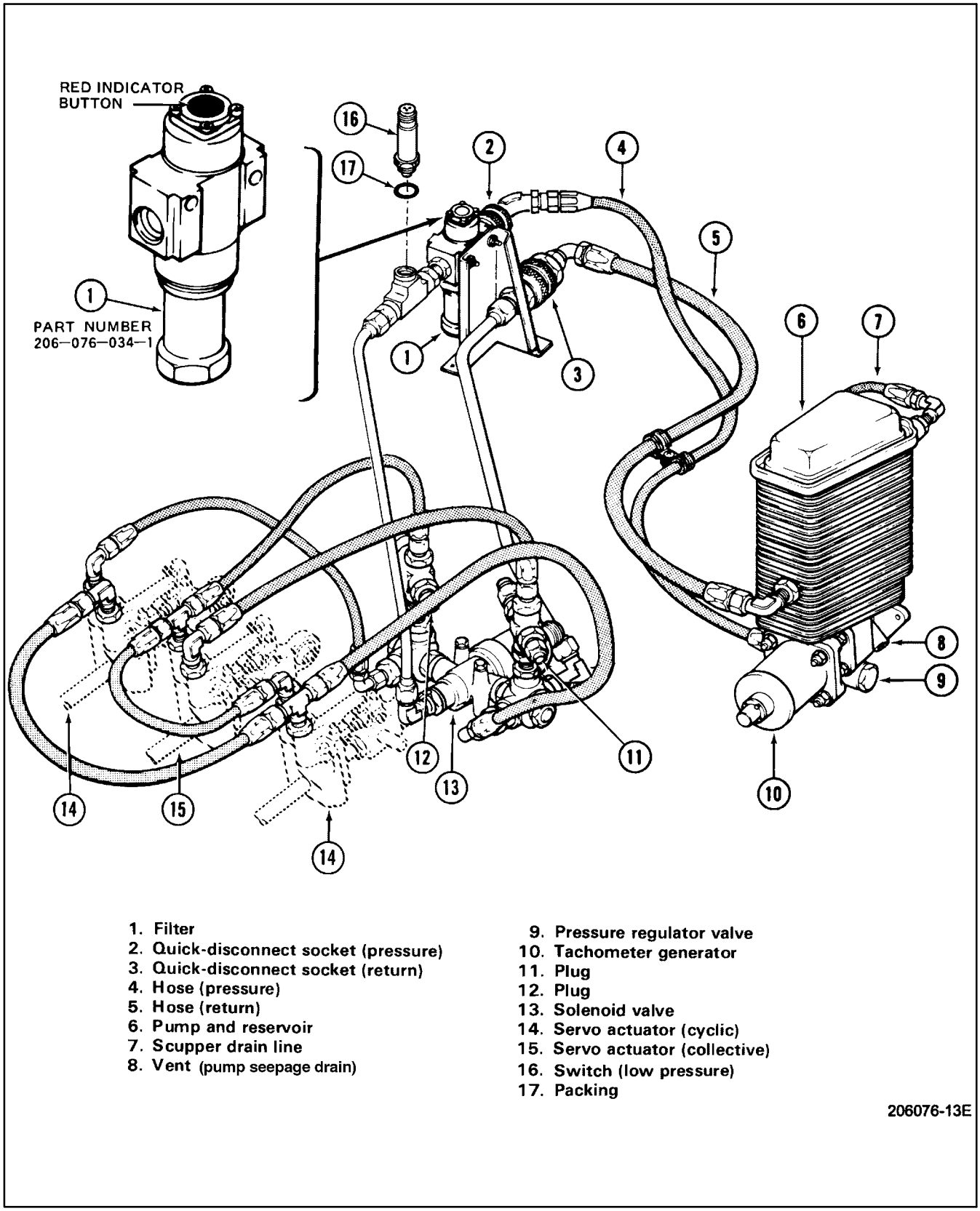

Figure 2-16. Hydraulic System

The power pack assembly is driven from the transmission accessory drive shaft. Pressure is delivered from the pump to the servo cylinders, which are connected to the mechanical linkages of the helicopter flight control system. The complete hydraulic servo assembly is located on top of the cabin roof forward of the transmission. Irreversible valves are installed on the cyclic and collective servo cylinders to dampen main rotor feedback in the event of a hydraulic system malfunction. The pressure required for system operation is preset to supply the demand. This system, for all practical purposes, is considered a closed type. A hydraulic system failure will be apparent by the illumination of the HYDRAULIC PRESSURE caution light on the caution panel or increasing control sluggishness or stiffness. The hydraulic pump is a gear–driven, pressure–loaded pump. The reservoir is mounted forward of the transmission. The level may be checked by a sight gauge located on the right side of the reservoir. The pressure–regulating assembly acts as a relief valve and is located at the base of the pump.

A micronic metal filter is located inside the upper forward cowling access door (right side). A red warning button on top of the filter extends upward to indicate filter contamination or clogging.

2.10.1 Flight Control Servo Units

Movement of the flight controls in any direction causes a power cylinder valve within the individual servo to open and admit hydraulic pressure to actuate the power cylinder, reducing the force load required for control movement.

The two servos on the outboard sides are actuated by and boost the cyclic system. The center servo boosts the collective control. Irreversible valves inside each cyclic and collective servo trap fluid for dampening rotor feedback in the event of a hydraulic system failure. A pressure switch and HYDRAULIC PRESSURE caution light are incorporated into the system and will illuminate if the pressure drops below 300 psi. When the system is initially engaged, the caution light will remain on until reaching 400 psi. Normal hydraulic pressure at 100 percent N_r is 600 ±50 psi.

2.10.2 Hydraulic Control Switch

The hydraulic control switch is located on the instrument panel (Figure 2-5). The switch is a two–position toggle–type labeled HYDRAULIC SYSTEM ON–OFF. The switch controls a solenoid valve, also called a fail–safe valve, that is spring loaded to the open or boosted position. Electrical power is required to secure the hydraulic boost. Should a failure in the electrical system occur, this valve would automatically open, even though the switch is in the OFF position. The hydraulic system is protected by the HYD BOOST circuit breaker on the overhead circuit breaker panel (Figure 2-10).

2.11 FLIGHT CONTROL SYSTEM

The flight control system (Figure 2-17) is a positive mechanical type, actuated by conventional helicopter controls that, when moved, direct the helicopter in various modes of flight. The system includes the cyclic controls, used for fore–and–aft and lateral control; the collective pitch (main rotor) control levers, used for vertical movement; and directional control pedals, used for heading control. The control system forces are reduced to near zero by hydraulic servo cylinders, which are connected to the control system mechanical linkages. A force trim system connected to the cyclic and tail rotor controls contains electrically operated mechanical units. There is no force trim connected to the TH–57B tail rotor controls.

The flight control system consists of push–pull control tubes and bellcranks, actuated by conventional helicopter cyclic, collective, and pedal controls. The controls are routed beneath the pilot seats aft to the center of the helicopter and then up to the cabin roof through the control column, which also serves as a primary cabin structure. Access doors are located on the aft side of the control column, and removable seats are provided for control inspection and maintenance accessibility. Cyclic and collective controls are routed to the main rotor blades through the swashplate. The swashplate and support assembly encircle the mast directly above the transmission. The swashplate is mounted on the universal support (pivot sleeve and uniball), which permits it to be tilted in any direction. Movement of the cyclic control stick results in a corresponding tilt of the swashplate about the uniball, which tilts the rotor tip–path plane. Movement of the collective pitch lever actuates the sleeve assembly, which raises or lowers the swashplate and transmits collective pitch changes to the main rotor blades. The cyclic controls are properly coordinated with the collective control by action in the mixing lever at the base of the control column. The directional control pedal linkages are routed through the tailboom to the tail rotor. Fixed–length control tubes and a minimum of adjustable tubes simplify rigging. All self–aligning bearings and rod ends are spherical Teflon bearings requiring no lubrication.

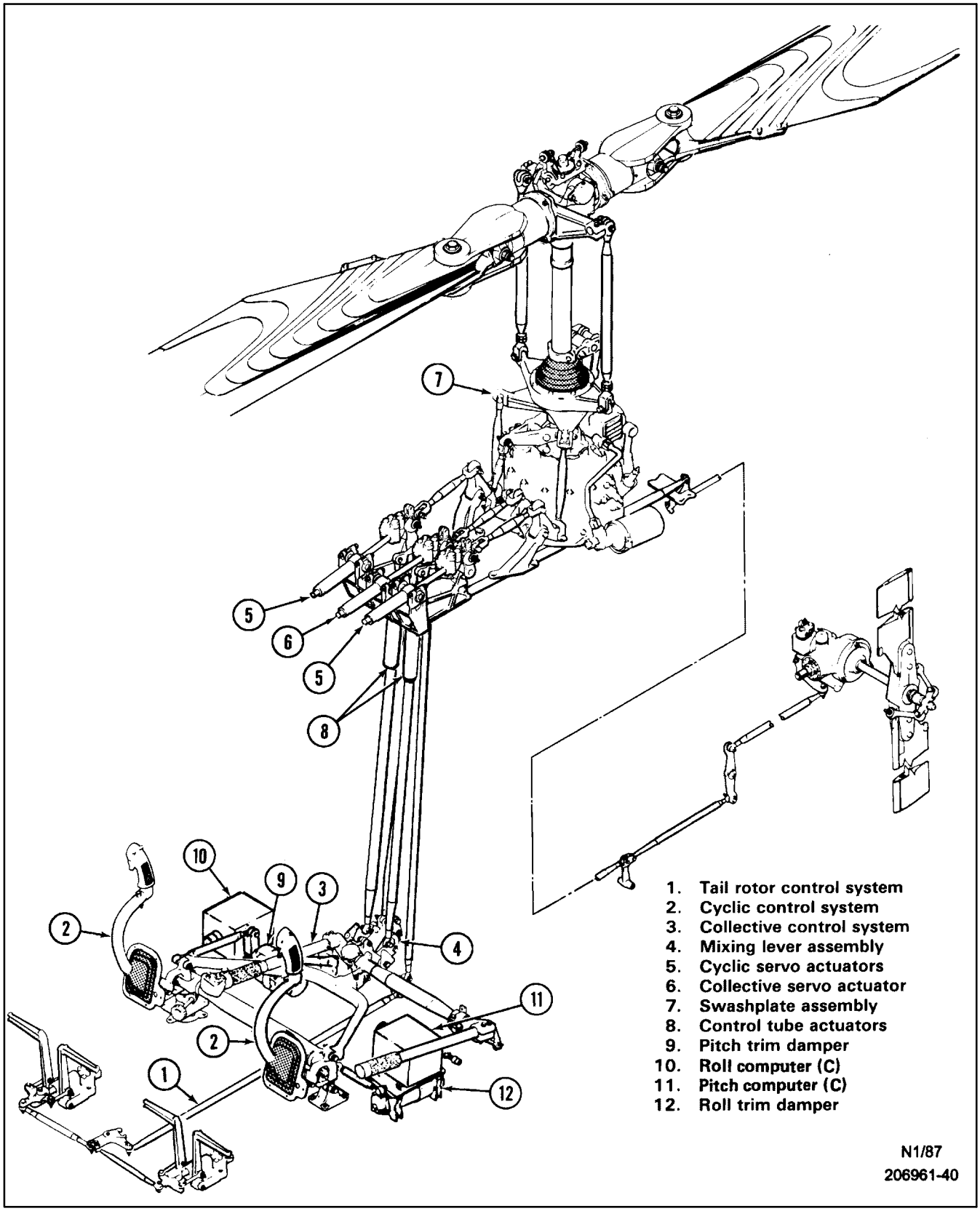

Figure 2-17. Flight Control System

2.11.1 Collective Pitch Control Lever

The collective pitch control lever (Figure 2-2) is located to the left of each pilot position and controls the vertical mode of flight. A rotating grip–type throttle is located on the forward end of each pilot collective pitch control lever. A switchbox is located at the end of the pilot (right seat) collective pitch control lever. The switchbox assembly contains the starter, governor INC DECR *beep* switch, twist grip idle release button, searchlight ON/OFF STOW switch, and searchlight adjustment switch. There is no switchbox on the copilot (left side) collective pitch lever.

2.11.2 Cyclic Pitch Control Stick

Cyclic pitch control sticks are floor–mounted between each pilot's legs and control the attitude of the helicopter. The cyclic grips (Figure 2-18) contain a trigger–type, two–position radio/Intercommunication System (ICS) switch, a force trim button, a cargo release button, and, in the TH–57C, an FCS button to engage/disengage the FCS STAB function. Depressing the FORCE TRIM button releases the magnetic brake, bypasses the attitude retention of the AFCS, and allows manual operation of the flight controls as long as the button is depressed. When the automatic flight control system is engaged, depressing the FCS button disengages the system. When the automatic flight control system is disengaged, depressing the FCS button engages the system. When a cargo hook and its associated electrical system are installed, depressing the CARGO RELEASE button on the cyclic grip allows the cargo hook to open.

2.11.3 Directional Control Pedals

The system is operated by the pedals (Figure 2-17). Pushing a pedal changes the pitch of the tail rotor, resulting in directional control, and may be used to pivot the helicopter on its own vertical axis. A pedal adjuster is provided to adjust the pedal distance for individual comfort.

Note

The pedal adjusters should not be set full aft as the pedal force trim switch will disengage the yaw force trim and the AFCS yaw axis (TH–57C).

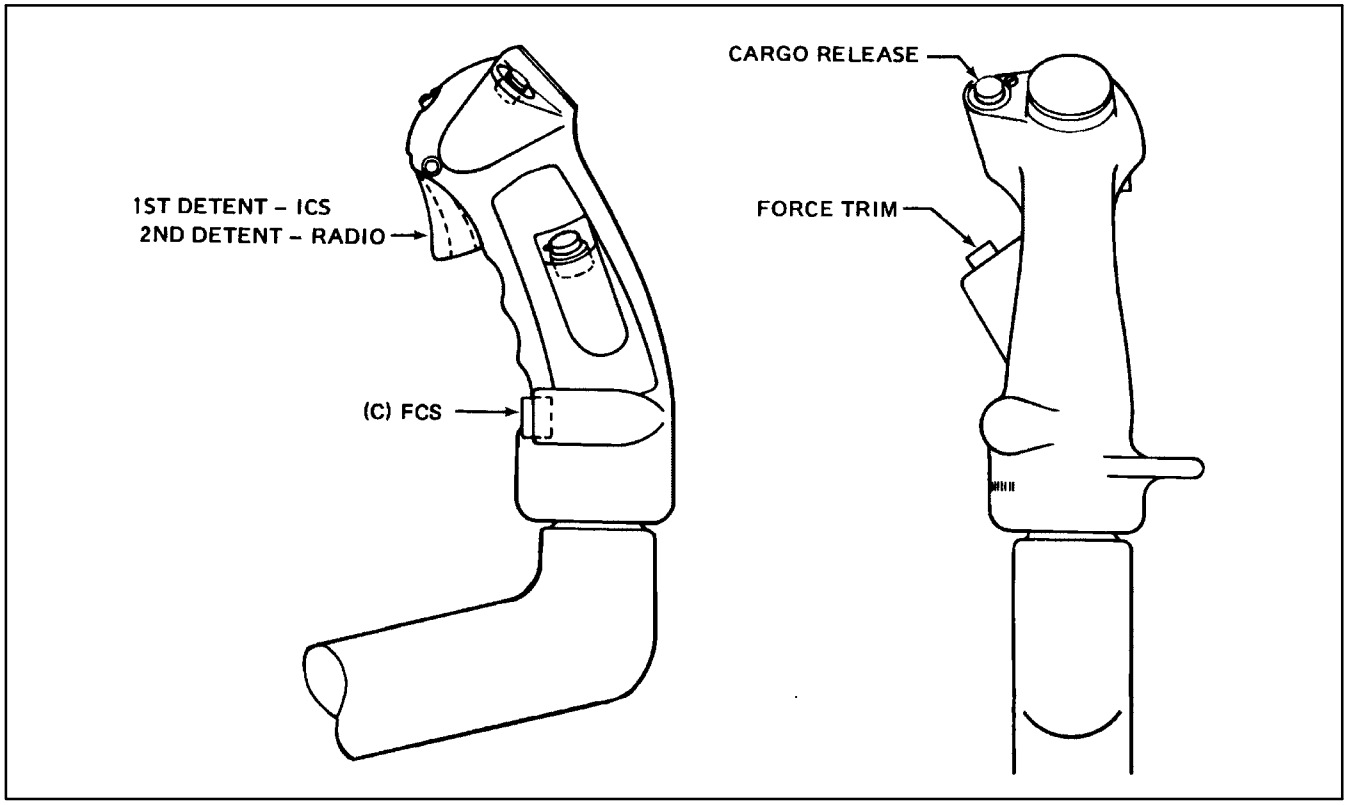

Figure 2-18. Cyclic Grip

2.11.4 Force Trim System

The force trim system incorporates a magnetic brake and force gradient spring in the cyclic to provide artificial feel in the systems. Depressing the cyclic grip FORCE TRIM button will cause the trim damper units (Figure 2-17) to position the force gradient spring in a position corresponding to the position of the cyclic sticks. FORCE TRIM buttons are mounted on the pilot and copilot cyclic grip (Figure 2-18). A force trim on/off switch is located on the AFCS control panel (TH–57C) or on the pedestal (TH–57B).

2.12 MINISTAB FLIGHT CONTROL SYSTEM (C)

The MINISTAB flight control system (Figure 2-17) is a basic three–axis series system with force trim. The three–axis series system is a rate–gyro–based transparent (fly through) flight control system that provides rate dampening and attitude retention in the pitch, yaw, and roll axis and altitude hold in cruise flight in addition to force trim functions. The force trim functions include stick trim point retention, artificial feel gradient for stick movements away from trim, and viscous dampening of stick inputs as well as transparency logic to interface with the MINISTAB attitude retention channel. The flight control system is comprised of three computers (roll, yaw, and pitch), three control tube actuator assemblies, three trim damper units, a controller, an air data computer, a junction box, three actuator position indicators, two cyclic grips, and a wire harness containing a test connector.

2.12.1 System Operational Description

The MINISTAB helicopter flight control system uses self–contained rate gyros to provide cyclic stability by driving linear electromechanical actuators. It differs from previous types of rate gyro systems in that the rate gyro signal is electrically integrated to achieve an attitude hold function. The system requires 28 Vdc, 26 Vac, and 115 Vac single–phase power sources.

The 115–Vac, 400–Hz, single–phase power, obtained from the FCS inverter, is for the rate gyro motor and for the computer internal power supplies. The rate gyro output signal is demodulated and applied to a servo amplifier that drives the rate and integrated rate (dampening and attitude hold) channels. Both paths are switched off when the system is off, resulting in a zero signal to the servo amplifier and centering of the actuators.

The actuators are mounted in control tubes and contain dc permanent magnet motors.

The MINISTAB actuators have low force output and are used in conjunction with hydraulic–boosted control (Figure 2-17). They are installed as close as possible to the input valves of the hydraulic boosters, thereby achieving a favorable condition for isolating the actuator motion from the pilot controls. The mass and friction on the booster side of the actuator is low compared to the pilot side of the actuators. In addition, cyclic artificial feel breakout force aids in this isolation.

In cyclic, the actuators are installed downstream of the mechanical collective and cyclic mixing; therefore, the two cyclic actuators must have a mixed motion. This mixing is accomplished electronically by applying the roll computer output differentially to the left and right actuators while the pitch computer output is applied additively to the two actuators. Because the series cyclic actuators float above the collective motion of the controls, no electronic collective mixing output is required. The computers are identical and interchangeable, with the proper gains for all axes contained in each but selected by wiring connections in the aircraft harness.

With altitude hold function, the altitude error signal is derived in the air data computer from an electromechanical absolute pressure transducer and an associated electronic synchronizing hold circuit. The error signal is applied to additional circuitry in the controller, resulting in longitudinal control inputs in response to altitude errors.

2.12.2 AFCS Controller

The AFCS controller (Figure 2-19) is located on the lower pedestal between the pilot and copilot (Figure 2-3) and consists of switches labeled STAB, FT, ALT, and TEST. STAB switch controls engagement and disengagement of the flight control stabilization system. FT switch controls the engagement and disengagement of the force trim system. Engagement of the FT and STAB switches combines force trim with stabilization and produces the automatic flight control system. Altimeter (ALT) switch controls engagement and disengagement of the altitude hold mode. TEST switch initiates a test of the automatic flight control and stabilization system. Power is supplied by essential No. 1 and essential No. 2 buses and is protected by a FORCE TRIM circuit breaker on each bus.

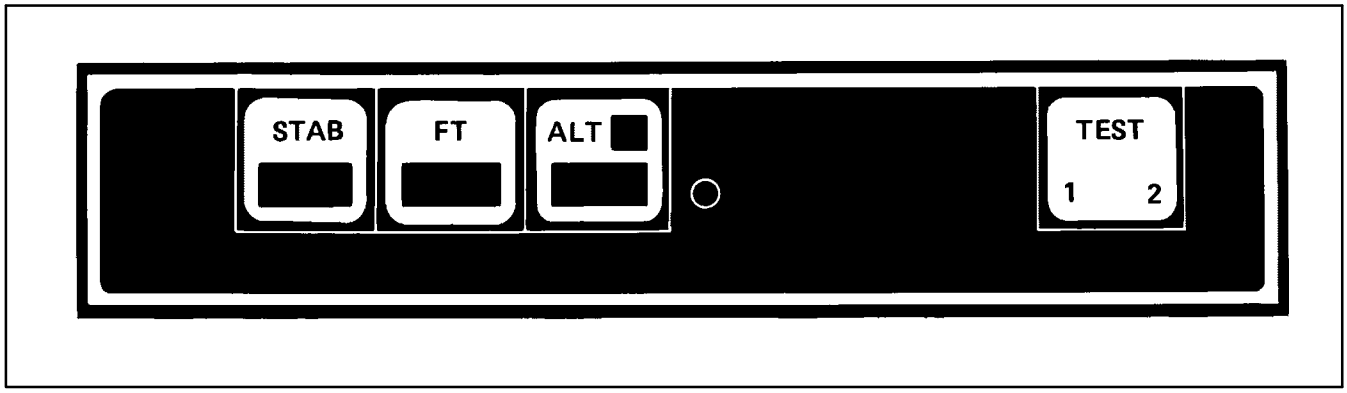

Figure 2-19. TH–57C AFCS Controller

2.12.3 Trim Damper Units

An electromechanical trim damper unit (Figure 2-20) is incorporated in the cyclic, pitch, and yaw control. The trim damper unit for roll and pitch channels is controlled by the FT switch and serves as a magnetic brake and force gradient in the cyclic control. The yaw trim damper unit is energized/deenergized through a series of microswitches in line with the antitorque pedals. The system is automatically activated when aircraft power is applied and is deactivated by pulling YAW FCS circuit breaker or setting pedal travel full forward or aft. The trim damper unit also serves as a control motion detector in the cyclic control. When FT is deenergized, the flight controls move freely and the trim damper units provide inertial dampening of pilot control inputs, thus smoothing pilot control movements. When energized, the trim damper unit links the controls with a force gradient spring, which provides an artificial feel, and a magnetic brake holds the controls in the position they were in when the magnetic brake was engaged, but it can be flown through by either pilot input. A microswitch detects any control input by the pilot on the cyclic control and allows the pilot to have authority over the attitude retention mode of the automatic flight control system.

2.12.4 Computer

Three interchangeable computers are integrated into the automatic flight control system. There is one computer each in the pitch, yaw, and roll channel (Figure 2-20).

Each computer is composed of a rate gyro, a power supply module, and speed regulator circuits. The rate gyro is capable of detecting changes in angular rate on the order of 0.01 degree/second. The rate gyro signal controls the rate dampening and altitude hold channels. If changes in angular rates in the roll or pitch axis are detected, the automatic flight control system will counteract or dampen out such changes with the proper control input. A power supply module provides the voltages that are used within the computer and other components in the system. The speed regulator circuits control the direction and speed of the control/actuators and a comparator circuit for the actuator position feedback circuit.

2.12.5 Control Tube/Actuator Assemblies

The actuators are electromechanical linear actuators (Figure 2-21) installed in the cyclic control tubes (Figure 2-17) driven by internal dc permanent magnet motors. The actuators respond to signals from the servo amplifiers in the pitch and roll computers. These signals cause the actuator to move about a neutral point with a total movement of approximately 0.5 inch. Movements of the cyclic actuator output shaft are applied to the cyclic hydraulic servo input valves. Both cyclic actuators move simultaneously. They move in opposite directions for roll input and the same direction for pitch input. A feedback potentiometer on the actuator mechanism generates a signal to a galvanometer, which indicates the position of each actuator. Pitch–and–roll actuator position indicators are mounted at the left bottom edge of the pilot instrument panel (Figure 2-3). If actuators are not working about their neutral positions, they may be recentered by depressing the cyclic FORCE TRIM button momentarily. When the system is off, the actuators automatically center and the flight controls function as conventional fixed control tubes.

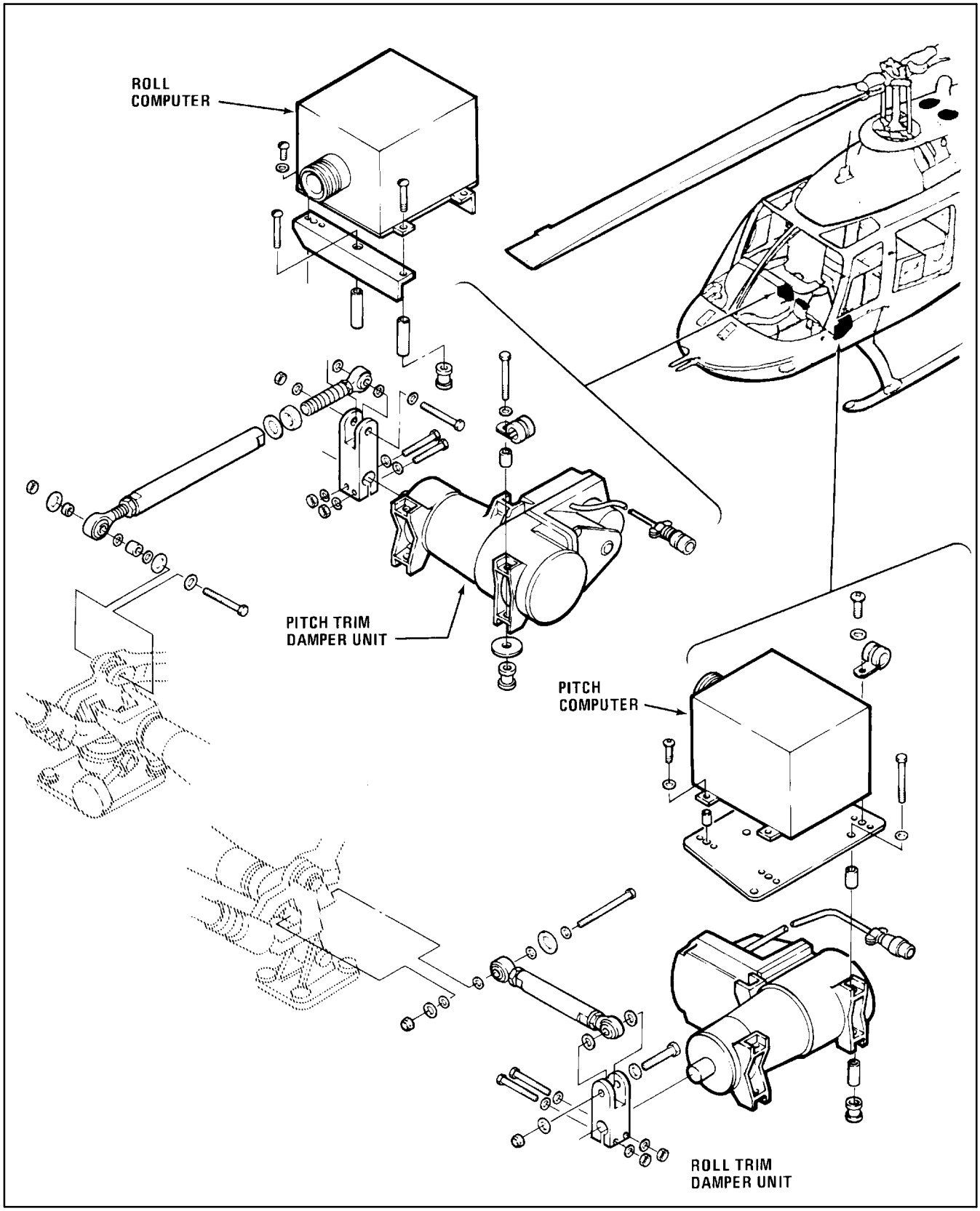

Figure 2-20. TH–57C Computers and Trim Damper Units

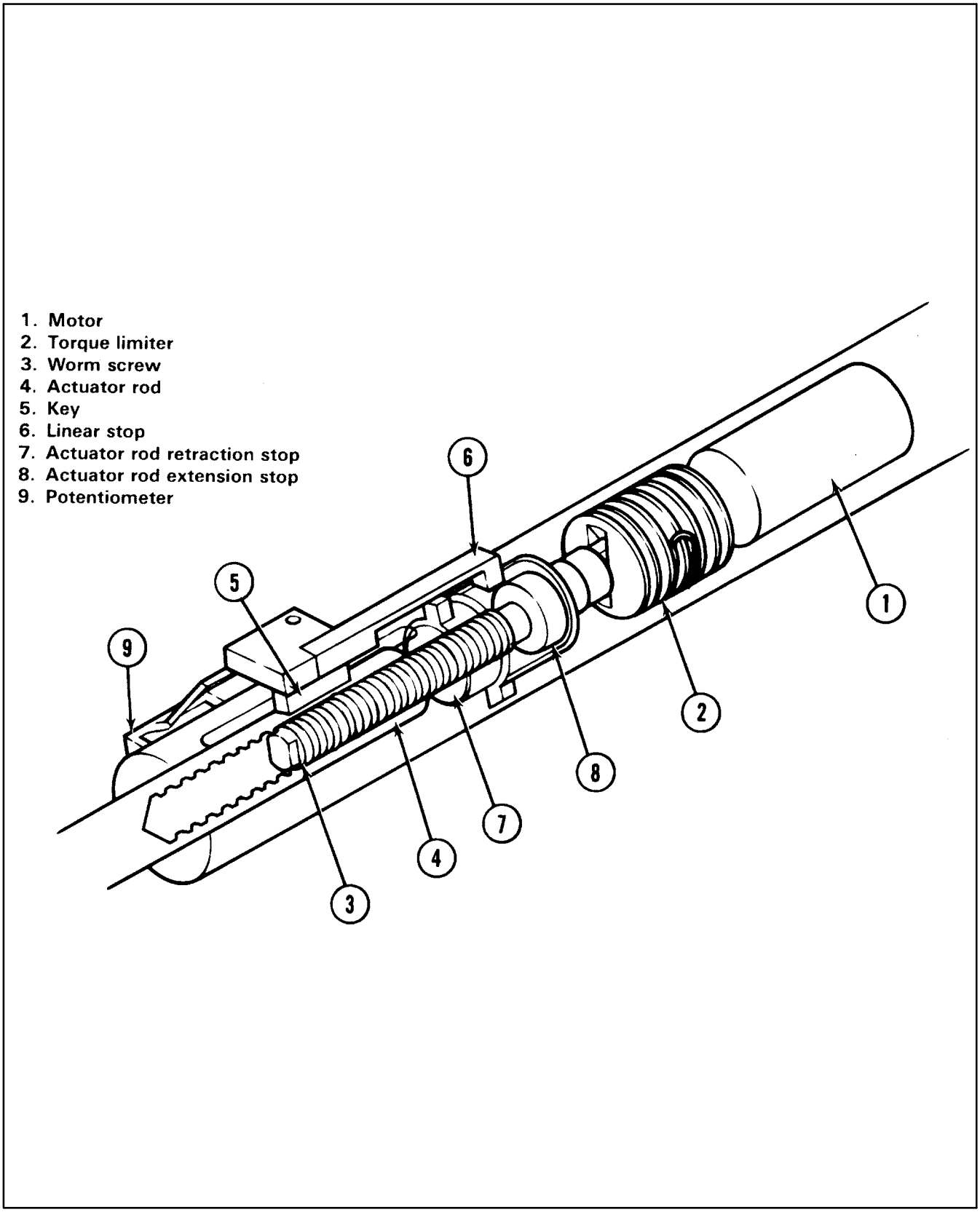

Figure 2-21. TH–57C Electromechanical Linear Actuators

2.12.6 Air Data Computer

The ADC is connected to the aircraft pitot–static system and provides airspeed and altitude information to the MINISTAB system for operation of the altitude hold function. The altitude hold function does not operate unless the ADC senses, through an airspeed switch and differential pressure transducer, that the helicopter has greater than 40 Knots Indicated Airspeed (KIAS). When altitude hold is engaged, an altitude transducer and digital altitude integrated circuit generates a signal proportional to the error between actual altitude and altitude at the moment of engagement.

2.13 LANDING GEAR SYSTEM

The landing gear system is a skid type, consisting of two lateral–mounted arched crosstubes attached to two formed longitudinal skid tubes. The landing gear structural members are made from formed aluminum alloy tubing with steel skid shoes to minimize skid wear. The gear assembly is attached with clamps at four points to the fuselage structure.

2.14 TAILBOOM

The tailboom is made of aluminum alloy in a basic monocoque structure and is attached to the aft fuselage by four bolts. The tailboom supports the tail rotor drive shaft, the tail rotor and gearbox, the vertical fin, and the horizontal stabilizer. Fairings provide a cover for the tail rotor drive shaft and gearbox.

2.15 HORIZONTAL STABILIZER

The horizontal stabilizer is attached to the tailboom in a fixed position and does not move with cyclic changes. Negative camber provides a nearly level nose attitude in cruise flight. Navigational lights are installed on the outboard ends of the horizontal stabilizer. There are four holes located on the lower surface of the horizontal stabilizer for drainage and ventilation.

2.16 VERTICAL FIN

The vertical fin provides directional stability at cruise airspeeds. It is offset 5 1/2° to relieve tail rotor loading at high forward speeds and is constructed of aluminum honeycomb. At speeds of approximately 95 KIAS and above, enough lift is generated by the vertical fin to require a slight amount of right pedal. The vertical fin is mounted on the right side of the tailboom by four bolts.

2.17 TAIL SKID

A tubular steel tail skid is attached to the lower aft section of the vertical fin assembly (Figure 1-2) and acts as a warning to the pilot in an inadvertent tail–low landing. The tail skid also serves to protect the tail rotor from inadvertent ground contact and is stressed for loads of 200 pounds downward or 400 pounds upward.

2.18 INSTRUMENTS

The flight instruments, navigation instruments, and miscellaneous instruments and indicators are described in the following paragraphs. The description of engine instruments, transmission instruments, and rotor instruments will be found with the respective descriptions of the engine, transmission, and rotor.

2.18.1 Pitot Static System (C)

Two electrically heated pitot tubes are mounted on the forward part of the cabin nose on either side of the helicopter centerline. The right side pitot tube supplies impact air to the pilot airspeed indicator, whereas the left side pitot tube supplies impact air to the copilot airspeed indicator. Static air pressure for pilot instrument operation is obtained from two lower static vents. One vent is located on each side of the helicopter aft of the chin bubble. The vents supply static pressure to the encoding altimeter, pilot airspeed indicator, altimeter, and instantaneous vertical speed indicator. The pilot system contains an alternate static vent located beneath the copilot seat. The alternate static vent can be selected by pulling the alternate static source knob located on the lower left of the pilot instrument panel (Figure 2-3). Static air pressure for the copilot instrument operation is obtained from two upper static vents. One vent is located on each side of the helicopter above the pilot static vent. The vents supply static pressure to the air data computer, copilot airspeed indicator, altimeter, and instantaneous vertical speed indicator.

2.18.2 Pitot Static System (B)

An electrically heated pitot tube is mounted on a support located on the forward part of the cabin on the helicopter centerline. The tube supplies impact air to the airspeed indicator. Static air pressure for instrument operation is obtained from two static vents located on each side of the fuselage forward of the cabin doors.

2.18.3 Altimeters

A pressure altimeter is located on the right side of the instrument panel (Figure 2-3). The altimeter senses static pressure from the two static ports on the sides of the fuselage. A duplicate pressure altimeter is located on the left side of the instrument panel for the copilot in the TH–57C.

Note

Altimeter error with current barometric pressure set should not exceed 75 feet from known field elevation.

2.18.4 Airspeed Indicator

The two–scale indicator (Figure 2-3) is calibrated in knots and provides indicated airspeed of the helicopter during flight. The instrument measures the difference between impact air pressure from the pitot tube and static air pressure from the static vents.

Note

Airspeed indicators are unreliable below 40 KIAS.

2.18.5 Instantaneous Vertical Speed Indicator (C)

Separate IVSIs are provided for the pilot and copilot on their respective instrument panels (Figure 2-3). In addition to the design and function of a basic vertical speed indicator, the IVSI incorporates an accelerometer to provide an instantaneous vertical speed indication.

2.18.6 Vertical Speed Indicator (B)

The VSI (Figure 2-5) registers ascent and descent of the helicopter in feet per minute. The instrument is actuated by the rate of the atmospheric pressure change in the instrument and is vented to the static air system.

2.18.7 Turn–and–Slip Indicators

The instrument (Figure 2-22) incorporates a dc–powered, gyro–stabilized needle (turn indicator) and a gravity–operated ball (slip indicator). Although the needle and ball are combined in the one instrument and are normally read and interpreted together, each has its own specific function and operates independently of the other. In the event of helicopter yawing or slipping, the ball will be off center. The needle indicates in which direction and at what rate the helicopter is turning (quantity), and the ball indicates balance (quality). In the event that power is interrupted, a red warning flag will appear in the indicator.

2.18.8 Magnetic–Compass (Standby)

The pilot standby compass (Figure 2-23) is a liquid–filled magnetic compass mounted on a support at the bottom of the pilot windshield at the forward cockpit right side. It will continue to work normally in the event of a total electrical failure. The compass is used in conjunction with a compass calibration card that is mounted on a bracket beneath the compass. A duplicate magnetic compass and correction card is mounted on the left side of the forward cockpit for the copilot in the TH–57C. The magnetic compasses are lighted at night through the instrument light rheostat.

2.18.9 Compass Heading System

The compass heading system (Figure 2-24) consists of a KI–525A horizontal situation indicator (Figure 18-15), a KG–102 directional gyro, a KMT–112 flux valve, and a KA–51B slaving adapter (Figure 2-25). One or two KNI–582 radio magnetic indicators (14, 56, Figure 2-3) are attached to the compass system to provide compass indications. The HSI provides a display of the horizontal navigation situation. It also provides manual controls for course and heading datum selections. Outputs from the HSI are also applied to each RMI.

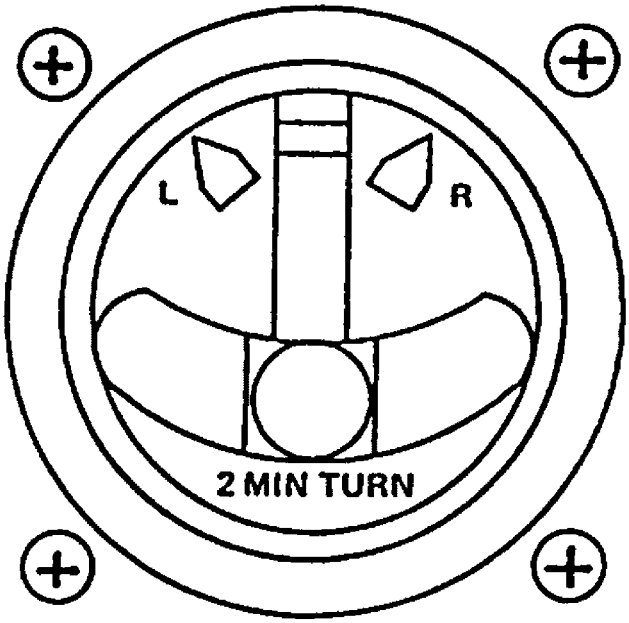

Figure 2-22. Turn–and–Slip Indicator

The directional gyro is a remote mounted unit that, in conjunction with the flux valve, provides a gyro–stabilized magnetic heading to the HSI. The directional gyro contains an internal power supply that provides excitation voltages for the flux valve and positive and negative dc voltages for the HSI and slaving adapter. The directional gyro is capable of operating as a magnetically slaved directional gyro in the SLAVE mode or as a free–directional gyro (receiving inputs from the KMT–112 flux valve) in the FREE mode. The heading output is presented on both RMIs on the instrument panel.

The flux valve senses the direction of the Earth's magnetic field and transmits this information to the HSI.

The slaving adapter (Figure 2-25) contains the slaving meter, slaving switches, and corrector circuitry that compensates for the effect of local magnetic disturbances. The compass heading system and HSI are protected by the HSI circuit breaker in the TH–57C and the DIR GYRO circuit breaker in the TH–57B. When power to the HSI is interrupted, a red HDG flag and a red NAV flag will be visible in the upper quadrants of the HSI. Both NAV1 and NAV2 will continue to operate. These flags disappear from view whenever the system is functioning properly.

2.18.10 Radar Altimeters

The radar altimeter system (Figure 2-26) consists of the KRA–405 receiver/transmitter, one or two KNI–416 radar altimeter indicators, and two KA–54 radar altimeter antennas. The system is protected by the RAD ALT circuit breaker.

The purpose of the radar altimeter is to provide accurate above–ground–level information from 2,000 feet to touchdown. It provides for continuous selection of the radar altitude and annunciation of the selected radar altitude (audible warning and annunciator light).

The KNI–416 altimeter gives altitude indication from –10 to 2,000 feet. From –10 to 200 feet, each mark represents 5 feet. From 200 to 500 feet, each mark represents 20 feet. From 500 to 2,000 feet, each mark represents 100 feet.

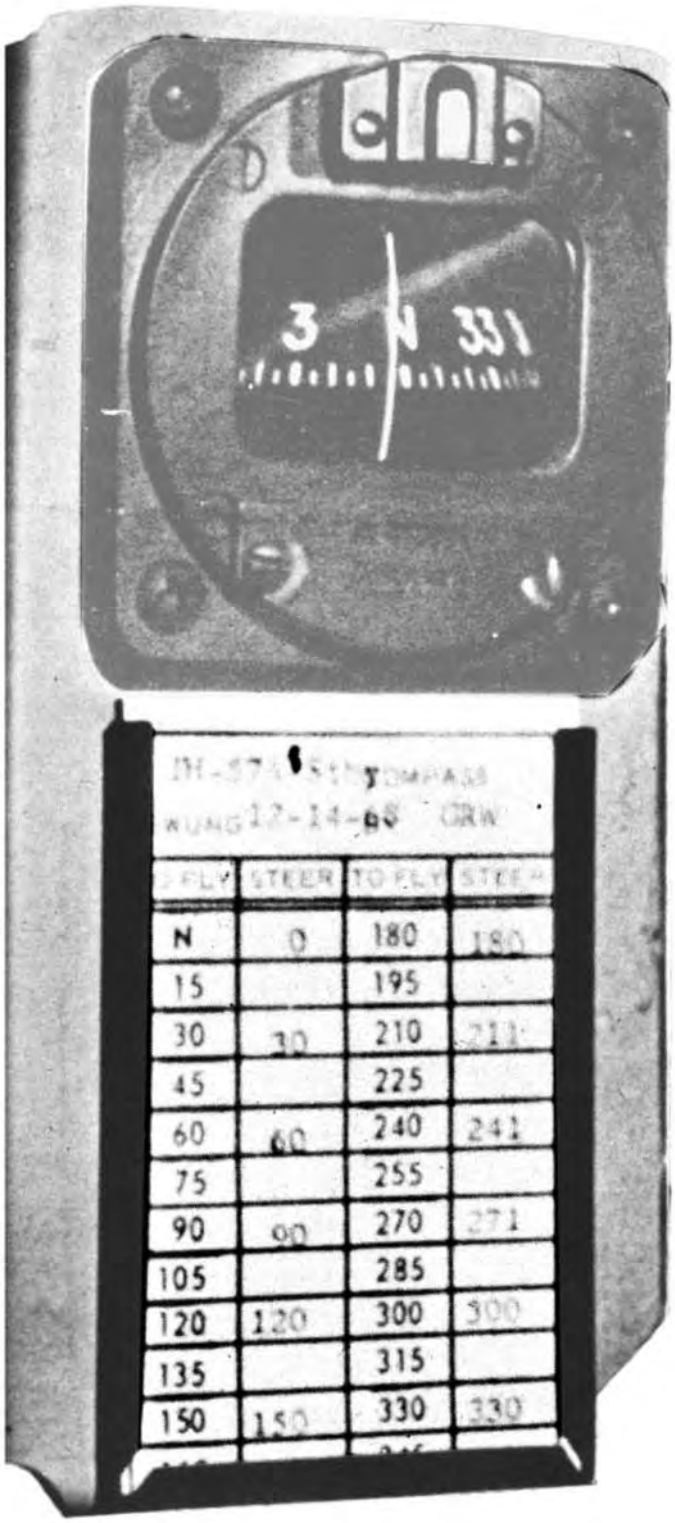

Figure 2-23. Magnetic Compass

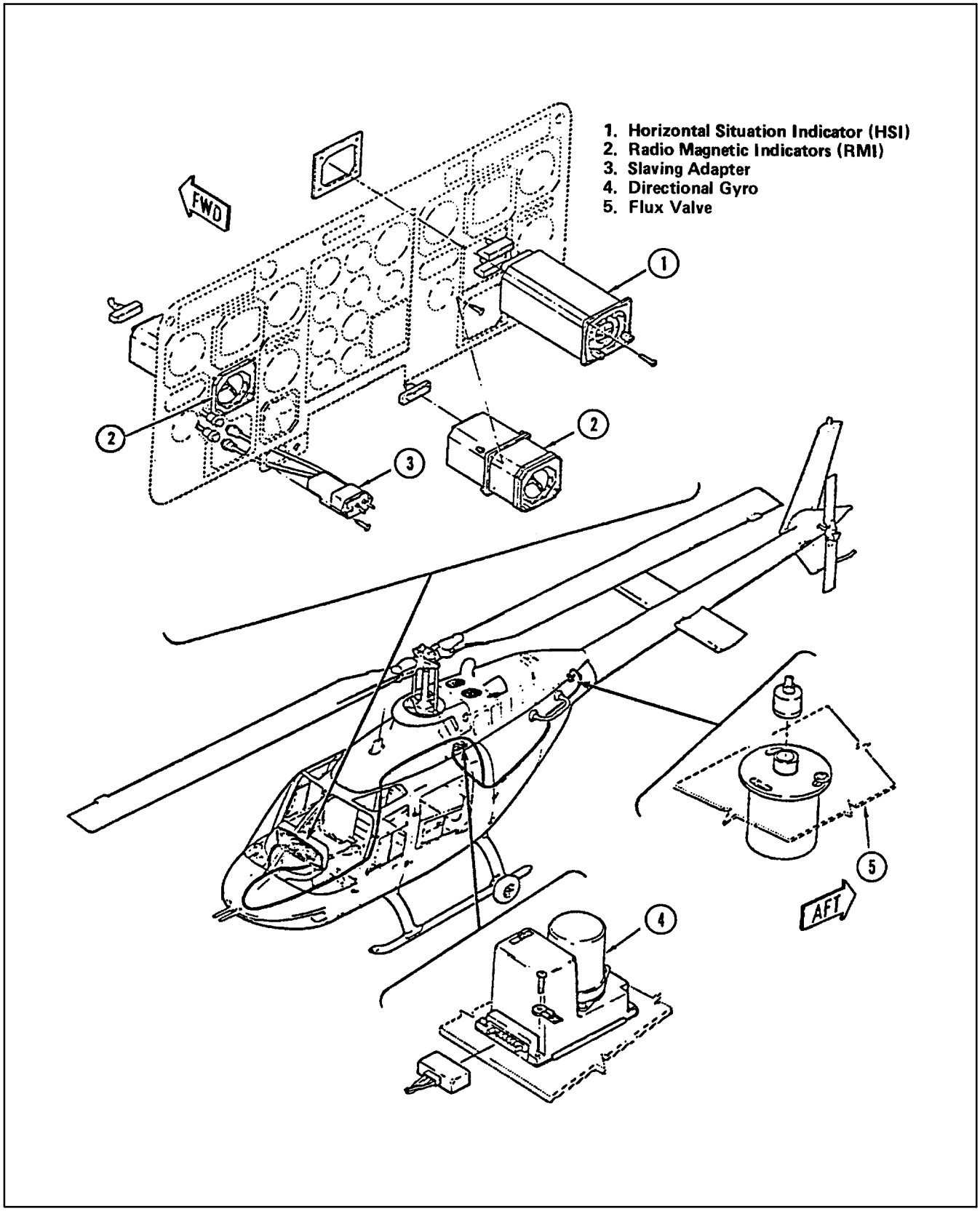

Figure 2-24. TH–57C Compass Heading System

Figure 2-25. Slaving Adapter

2.18.10.1 Controls and Function

1. DH select — Used to select the desired radar altitude. Rotating knob moves the DH cursor on the altitude scale to the desired radar altitude.
2. DH lamp — When the helicopter descends to the radar altitude set, the DH lamp will illuminate and an audible tone will sound in the headset. The lamp/tone may be extinguished by depressing the DH lamp and turned on again when below the radar altitude by depressing a second time. The DH lamp is automatically armed upon climbout as the helicopter passes through the DH altitude. In the TH–57C, the DH warning is independent on each pilot/copilot radar altimeter.
3. TEST button — Activates an internal test system when pressed. If the system is operating properly, the indicator will read 50 ±5 feet and the flag will come into view. This procedure can be accomplished on the ground or during flight.
4. Flag — When dropped into view, indicates invalid altitude information is being displayed and proper flag operation during the test.

2.19 EMERGENCY EQUIPMENT

2.19.1 Caution Panel

The caution panel (Figure 2-27) is located on the instrument panel. Illumination of any of the lights on the caution panel alerts the pilot to a system fault or condition. The caution panel is powered by the dc common bus in the TH–57B and is powered by the essential No. 2 bus in the TH–57C. In both models, the caution panel is protected by the CAUTION LT circuit breaker.

Note

The ENG OUT and ROTOR LOW RPM warning circuits are deactivated by pulling the CAUTION LT circuit breaker.

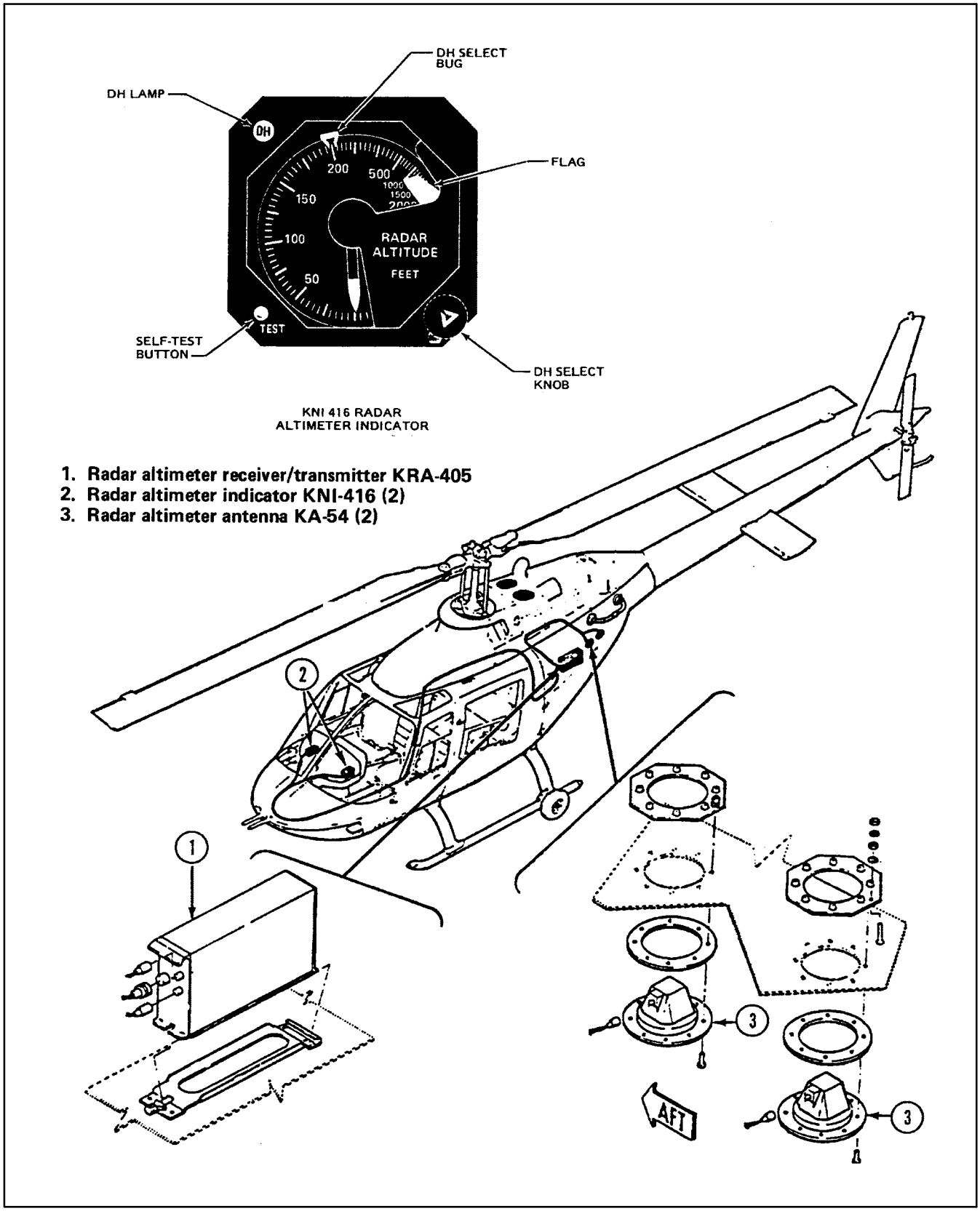

Figure 2-26. Radar Altimeter System

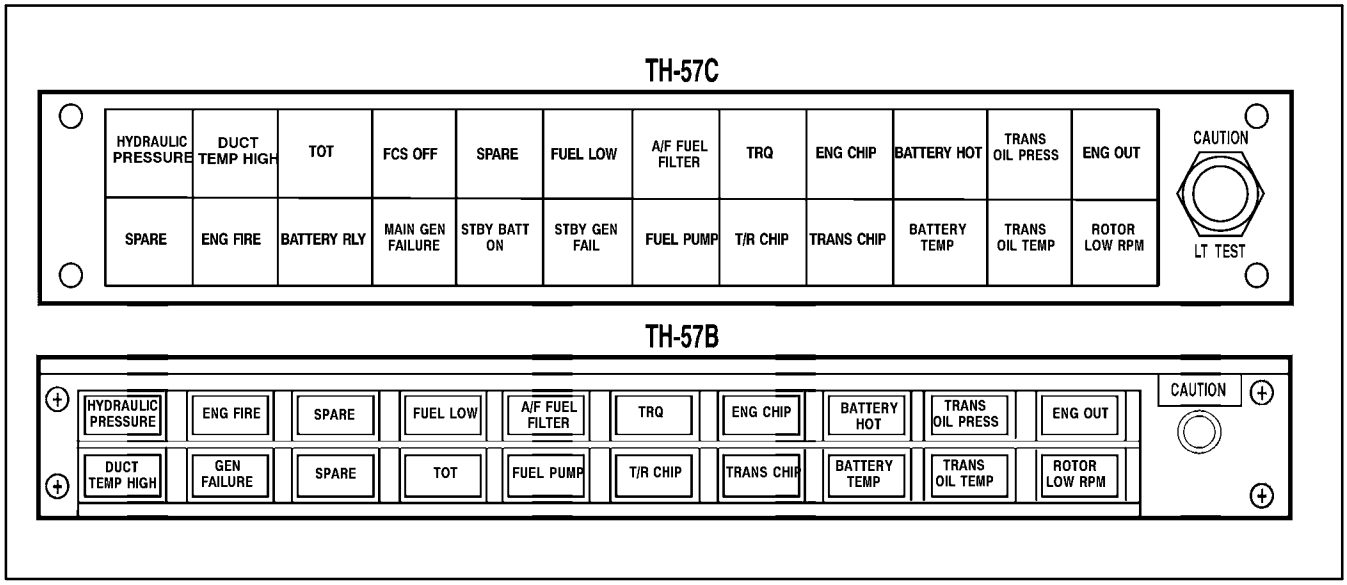

Figure 2-27. Caution Panels

2.19.1.1 BRIGHT/DIM Switch

The BRIGHT/DIM switch, located on the instrument panel (Figure 2-3), permits selection of a bright or dimmed condition for all amber–colored lights on the caution panel. The switch also affects the brightness of the AFCS controller panel, the GPS panel lights, and the CLEAR CHIP indicator. The three red–colored lights on the caution panel are not dimmable. Placing the switch in the up position selects the BRIGHT condition; in the down position, the DIM condition. In the TH–57C aircraft, if the instrument light rheostat is in the OFF position, the caution lights will not go to the dim mode. The BRIGHT/DIM switch is spring loaded to the neutral position.

WARNING

During daylight operations with the BRIGHT/DIM switch in DIM and the instrument lights set on low setting, the amber–colored caution lights will be extremely difficult to distinguish.

2.19.1.2 Test Switch

The caution panel has a press–to–test switch to test the caution lights. Momentarily pressing the test switch will cause the illumination of all the individually worded segments. Testing of the system will not change any particular combination of fault indications that might exist prior to testing. The worded segments will remain illuminated as long as fault or condition exists.

Note

When testing the caution panel with the BRIGHT/DIM switch in the DIM position, three caution lights will not illuminate. they are the center SPARE light in the top row and the two extreme left lights in the bottom row (SPARE and ENG FIRE).

2.19.2 Chip Detector System

The chip detector system incorporates a way to clear nuisance chips and continuously monitors the integrity of all chip detector circuits. The system goes through a self–test each time electrical power is turned on on the aircraft. A CLEAR CHIP switch is located adjacent to the caution–warning panel that allows the pilot to attempt to clear all chips with less than a .005 inch cross sectional diameter. If the chip(s) clear, the corresponding caution light will extinguish. The power unit (Figure 2-28) is located on the aft side of the pilot's seatback and is easily accessible by maintenance personnel during preflight and postflight checks.

2.19.3 Chip Detector Warning Lights

Chip detector elements are installed in the drain plugs of the transmission sump, engine sump, freewheeling unit, and the tail rotor gearbox. These plugs provide a means of detecting metal particles in the oil.

Filings in the oil bridge the gap across the detector plug and complete an electrical circuit to the cockpit that illuminates the appropriate caution light. The caution lights are marked ENG CHIP, TRANS CHIP, and T/R CHIP, and are located on the caution panel (Figure 2-27). In the case of a chip light, the CLEAR CHIP indicator switch (Figure 2-3) will also illuminate. The chip lights are protected by the CAUTION LT circuit breaker. The aircraft chip detecting system is equipped with a continuity sensor that provides an automatic continuity check. When the battery switch is closed, the chip detector caution lights will illuminate for approximately 5 seconds, confirming continuity of the electrical circuits for these devices. Interruption of the electrical power in excess of 2 seconds or activation of the caution panel test switch for 2 seconds or longer will recycle the circuit continuity check.

The CLEAR CHIP button will illuminate during the chip detector continuity test along with all the caution panel chip lights. Depression of the CLEAR CHIP button while illuminated may cause damage to the continuity sensor.

2.19.4 Fire Detector System

The fire detector system consists of an ENG FIRE warning light, a FIRE DET TEST switch, fire detection control box, and a heat–sensitive fire detection element located on the upper portion of the interior engine cowling. Excessive heat from the engine compartment causes an increase of pressure in the fire detector element, which is sensed by a pressure switch in the fire detector control box. This pressure switch will illuminate the ENG FIRE warning light on the caution panel. The fire detector system is protected by a FIRE DET circuit breaker. The press–to–test (FIRE DET TEST) switch is located by the caution panel. When the switch is pressed, the electrical circuit is closed, illuminating the ENG FIRE warning light.

2.19.5 Engine Failure Warning System

An engine–out sensor switch, splined to the N_g tachometer–generator drive shaft, causes the engine–out audio unit to emit a beeping signal and activate the ENG OUT warning light (Figure 2-27) when N_g drops below 55 ±3 percent. On engine start, the light and audio signals go out as the N_g reaches 55 ±3 percent. The audio unit is powered by essential No. 1 bus. The ENG OUT warning light is protected by the CAUTION LT circuit breaker.

2.19.6 Rotor Rpm Warning System

A low rotor rpm sensor switch, splined to the N_r tachometer–generator drive shaft, causes the low rotor rpm audio unit to emit an audible signal and activates the ROTOR LOW RPM caution light (Figure 2-27) when N_r drops below 90 ±3 percent. The audio unit is protected by the LOW ROTOR rpm circuit breaker. The ROTOR LOW RPM caution light is protected by the CAUTION LT circuit breaker.

Note

A collective cutoff switch disables the low rotor rpm audio unit when the collective is within approximately 1 inch of the full down position.

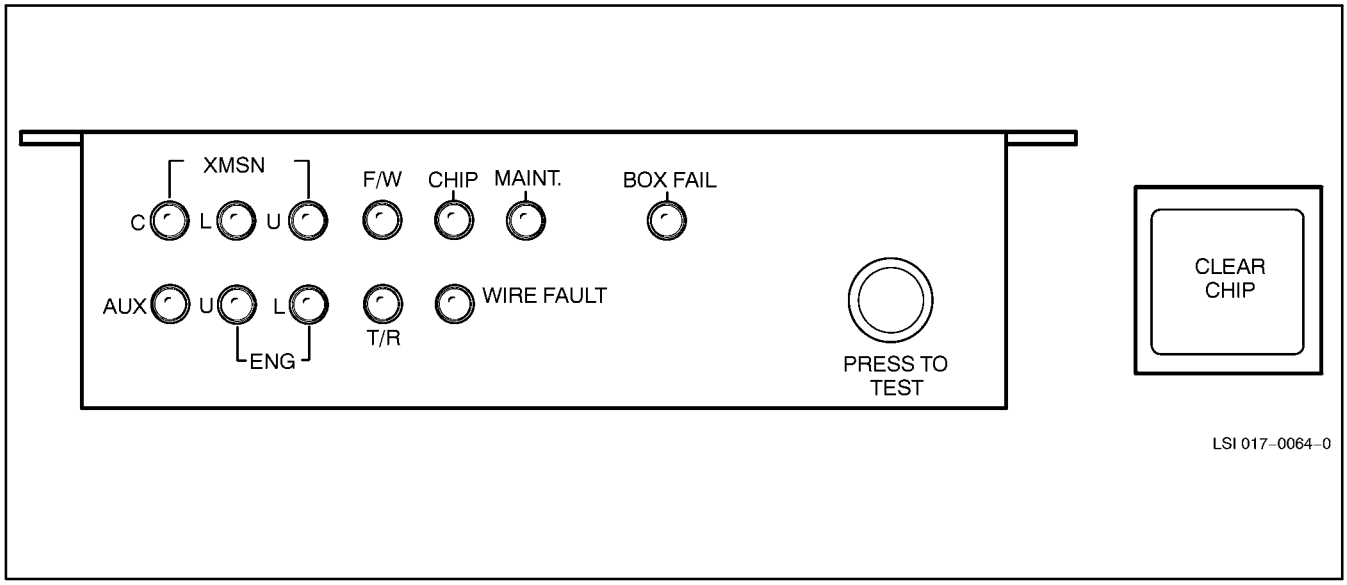

Figure 2-28. Chip Detector Power Unit

2.19.6.1 Audio–Mute Switch

A two–position Audio–Mute switch is located on the upper instrument panel, left of the caution panel (Figure 2-3). This switch controls the audio volume of the engine out warning horn and the low rpm warning horn to the pilot and copilot headsets. The audio position is the normal operating mode. In the mute position, the headset audio is deactivated.

CAUTION

The audio–mute switch should be left in the audio position during flight.

2.20 FREE AIR TEMPERATURE BULB

A bimetal free–air temperature indicator is located above the instrument panel and in the approximate upper center area of the windshield. The indicator provides a direct reading of the outside air temperature in degrees Celsius and Fahrenheit.

2.21 LIGHTING EQUIPMENT

2.21.1 Exterior Lights

2.21.1.1 Position Lights

The position lights (Figure 2-29) consist of one red and one green side–mounted light and one white tail–mounted light. The side lights are located on the tips of the horizontal stabilizer. The tail light is mounted on the extreme end of the tailboom and is shock mounted to isolate vibrations. The lights are protected by a circuit breaker that is integral to the POS LT switch (Figure 2-10).

A DIM/BRIGHT switch allows selection of either function. The STEADY/FLASH switch allows selection of the desired steady or flash function.

2.21.1.2 Anticollision Lights

High visibility anticollision lights are mounted on the top of the vertical fin and below the fuselage aft of the baggage compartment (Figure 2-29). The lights are protected by a circuit breaker that is integral to the ANTI–COLL LT switch (Figure 2-10).

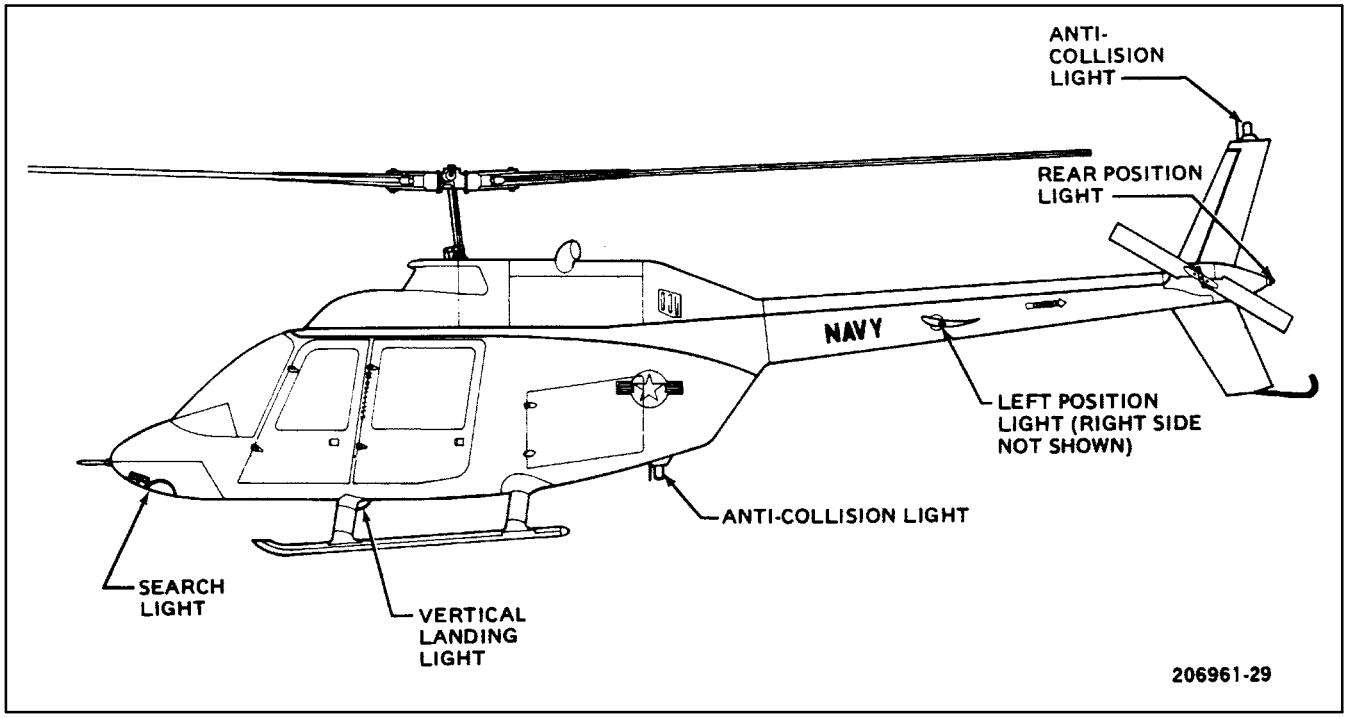

Figure 2-29. Exterior Lighting

2.21.1.3 Landing Light

A vertical landing light (Figure 2-29) is mounted under the fuselage, aft of the forward crosstube, for illumination of the area beneath the helicopter for hovering operations. The light is protected by a circuit breaker that is integral to the LDG LT switch (Figure 2-10). The light is fixed in position and is not adjustable from the cockpit.

CAUTION

Excessive use of the landing light (10 minutes or more during periods of prolonged hovering or taxiing) may cause overheating with a resultant fire hazard.

2.21.1.4 Searchlight

An adjustable searchlight (Figure 2-29) is mounted under the fuselage, just aft of the nose, for illumination of the approach area. The light is adjustable to 120° of extension. From 0° to 60° extension, the light will rotate 90° left or right. From 60° to 120° extension, the light will rotate 360°. The light is controlled by two switches on the pilot collective head (Figure 2-2). The light is protected by two circuit breakers labeled SEARCHLIGHT POWER and SEARCHLIGHT CONT. The SEARCH LT switch has ON, OFF, and STOW positions. The searchlight control switch controls the direction of the searchlight. The light moves left, right, up, or down corresponding to the direction in which the switch is pushed. The light retains the position it is in when the switch is released. When no longer required, the light may be automatically retracted by placing the SEARCH LT switch to STOW.

CAUTION

Once the automatic stow cycle is completed, the switch should be placed in the OFF position. If the searchlight is left in the STOW position, a faulty limit switch may cause the extend/retract motor to burn out.

2.21.2 Interior Lights

2.21.2.1 Instrument Lights

The INST LT OFF BRT switch (Figure 2-10) illuminates the various console, overhead placard, engine, and flight instruments. The rheostat–type switch is protected by the INST LT circuit breaker.

2.21.2.2 Cockpit Lights

Additional cockpit lighting is furnished by two removable variable brightness lamps that are located near the top of the column between the pilot and copilot. A rheostat operating switch for the light is mounted on the light body assembly, which controls the level of illumination. The lens casing of the light may be rotated to focus the beam and to convert the white light to a red light. The cockpit lights are protected by the COCKPIT LT circuit breaker(s).

2.21.2.3 Cabin Lights

Two internal cabin light assemblies are mounted on the forward portion of the cabin roof. Each light has an on and off switch located on the outside edge of the light assembly. The direction of each light beam is adjustable. The cabin lights are protected by the COCKPIT LT LEFT circuit breaker in the TH–57C.

Note

Cabin lights may not be installed in some aircraft.

2.22 ENVIRONMENTAL CONTROL SYSTEM

The environmental control system consists of a vapor cycle air conditioner for cabin cooling and cabin heating provided by engine bleed air (Figure 2-30). The environmental control system incorporates an environmental control panel (Figures 2-3, 2-4, and 2-5) and a cabin heat valve (Figure 2-10).

The air–conditioner system consists of an engine–driven compressor, a condenser, and an evaporator, both using electric motor–driven blowers. AIR COND or FAN may be selected. In the AIR COND mode, the evaporator blower is automatically activated, distributing cold air. The FAN mode permits cabin air circulation only, either in a HI or LO blower speed as selected by the second switch. Temperature control is accomplished through a rheostat to set desired cooling air temperature.

The cabin heat valve is a single (INC/DECR) rheostat knob that allows warm air to flow from the cabin heater to the cockpit. When the cabin heat valve is on, the environmental control panel should be set to FAN/HI for maximum effectiveness.

2.23 VENTILATING SYSTEM

Two louvered grills in the nose on either side of the battery access door direct ram air to a manifold assembly.

The manifold assembly will either direct air to the defog system or into the cabin. The amount of ventilating air is controlled by two push–pull cables inside the cockpit on either side of the center console. If no air is required, air is dumped overboard through vent hoses. Additional ventilating air may be obtained from the sliding windows on the crew and passenger doors.

Note

Use of the ventilating system reduces the air available to defog the windscreen.

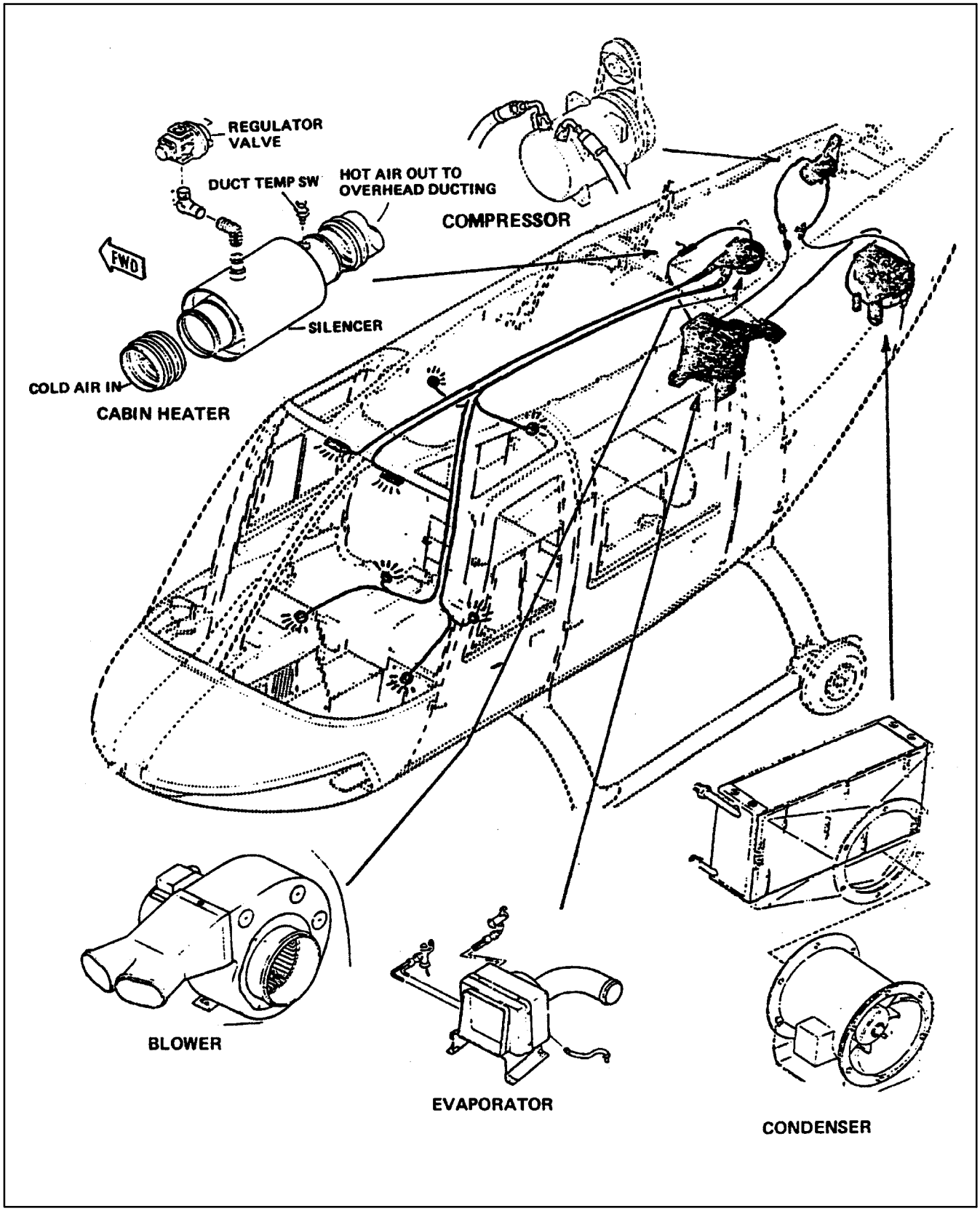

Figure 2-30. Environmental Control System

2.24 PITOT HEATER

An electrical pitot heater is installed on the pitot tube head and serves to prevent ice from obstructing the pitot tube. The pitot heater is protected by the PITOT HEAT circuit breaker/switch.

2.24.1 Pitot Heater Operation

The pitot heater switch(es) located on the overhead console should be in HEAT position to prevent ice forming in pitot tube(s). To shut off pitot heater, position the switch aft.

2.25 ENTRANCE/EGRESS

WARNING

In the TH–57B/C, inadvertent jettisoning of cockpit doors is possible if jettison handle is utilized as a handhold or handrest during flight.

Four doors are provided for entering and exiting the helicopter. The doors are of bonded sheet metal construction with acrylic plastic windows. TH–57B/C doors may be jettisoned by means of emergency jettison handles located in front of the top edge of the door. Refer to Part V for emergency entrance and egress procedures.

2.26 PILOT AND COPILOT SEATS

The forward seats are constructed of aluminum honeycomb panels and form an integral part of the airframe. Each seat is equipped with a lap safety belt and inertia reel shoulder harness. Seats are adjustable for lumbar support.

2.26.1 Shoulder Harness

An inertia reel shoulder harness is incorporated in the pilot and copilot seats with a manual lock–unlock handle located on the left side of the pilot and copilot seats. With the lever in the unlocked position, the reel cable will extend to allow the pilot to lean forward; however, the reel will automatically lock when helicopter encounters a longitudinal impact force of 2g to 3g deceleration. Locking of the reel can be accomplished from any position and the reel will automatically take up slack in the harness. To release the lock, it may be necessary to lean back slightly to release tension of the lock and move the control handle to the unlock aft position.

2.27 PASSENGER SEATS

The aft compartment (Figure 1-1) provides seating for three passengers or, with seats removed, space for cargo. The seat support is constructed of aluminum honeycomb panels and covers the forward portion of the fuel cell. The center panel of the seat deck is removable to gain access to the forward part of the fuel cell. The aft seats are provided with a lap–type safety belt and a shoulder harness with an inertial reel.

2.28 MISCELLANEOUS EQUIPMENT

2.28.1 Fire Extinguisher

A 2–pound Bromochlorodifluoromethane (BCP) fire extinguisher is located between the pilot and copilot seats. It is held in place by a bracket with a quick–release mechanism for emergencies.

2.28.2 First–Aid Kits

A first–aid kit is mounted on the aft right side of the center column where it is accessible to both crew and passengers.

2.28.3 Data Cases

A data case for maps, flight reports, etc. has been provided. The data case is located on the pilot door. An additional data case is located on the pedestal.

2.28.4 Mooring Fittings

Mooring fittings are provided at three locations on the helicopter: Two fittings are installed under the fuselage just forward of the forward landing gear crosstube, and the remaining mooring point is located forward of the lower anticollision light. The mooring points combine to serve as jacking points for the helicopter.

2.28.5 Tow Rings

A tow ring has been provided at the forward end of each of the landing gear skids to facilitate towing the helicopter with the ground handling wheels lowered. These rings will accommodate a standard towbar.

2.28.6 Ground Handling Wheels

Ground handling wheels have been provided on each of the landing gear skids. These wheels can be extended to provide a capability to move the helicopter on the ground by either pushing or towing.

CAUTION

The ground handling wheels shall be removed prior to flight.

2.28.7 Rotor Tiedown

A rotor tiedown lanyard and fitting is provided for use in mooring the aft blade of the main rotor to prevent the rotors from flapping when the helicopter is parked.

2.28.8 Exhaust Duct Cover

A cover is supplied to cover the exhaust ducts during storage or mooring.

2.28.9 Pitot Covers and Intake Plugs

Engine intake plugs (four) and pitot tube covers are provided to prevent entry of foreign objects during storage or mooring.

WARNING

Remove all tiedowns, plugs, and covers prior to engine start.

2.28.10 Ashtrays

Two ashtray assemblies are located on top of the partition that is directly behind the pilot and copilot seatbacks.

CHAPTER 3

Service and Handling

3.1 FUELING AND SERVICING

Servicing points are presented on the servicing diagram (Figure 3-1). See Figure 3-2 for specifications. See Figure 3-3 for system capacities. See Figure 3-5 for turning radius.

3.1.1 Crew and Truck

Only authorized and qualified personnel shall operate fueling equipment. The plane captain shall be responsible for fueling the helicopter after each flight and will make a visual check to ensure the proper fuel is used. Do not locate the helicopter in the vicinity of possible sources of ignition such as blasting, drilling, or welding operations. A minimum of 50 feet should be maintained from other aircraft and 75 feet from any operating radar set. Aircraft servicing vehicles will be positioned parallel to the helicopter during any servicing operation.

CAUTION

While pressure refueling, fuel pressure should not exceed 40 psi. Fuel can be forced through the vent system, causing a fuel spill.

3.1.2 Grounding

Prior to fueling, grounding devices on helicopter and on trucks shall be inspected by fueling personnel for proper ground.

3.1.3 Electrical Hazard

Turn off all switches and electrical equipment in the helicopter. Check that no electrical apparatus, supplied by outside power (electrical cords, drop lights, floodlights, etc.), is in or near the helicopter. For night fueling, safety flashlights shall be used.

Note

During pressure refueling, necessary radio and electrical equipment may be on.

3.1.4 Static Differential

Before using a fuel hose, the hose nozzle shall be brought in contact with some metal part of the helicopter, remote from the fuel cells, to eliminate any static differential that exists. This procedure should result in eliminating static differential to reduce the chance of static spark at fuel cell filler port.

3.1.5 Attaching Wire Clamp

Before removing the cell filler caps, the hose nozzle ground attachment shall be connected to a metal part of the helicopter at a safe distance from filler openings and cell vent.

3.1.6 Fire Extinguishers and Attendant

During fueling, a secondary operator or assistant plane captain will man a CO_2 hand extinguisher with a second extinguisher readily available.

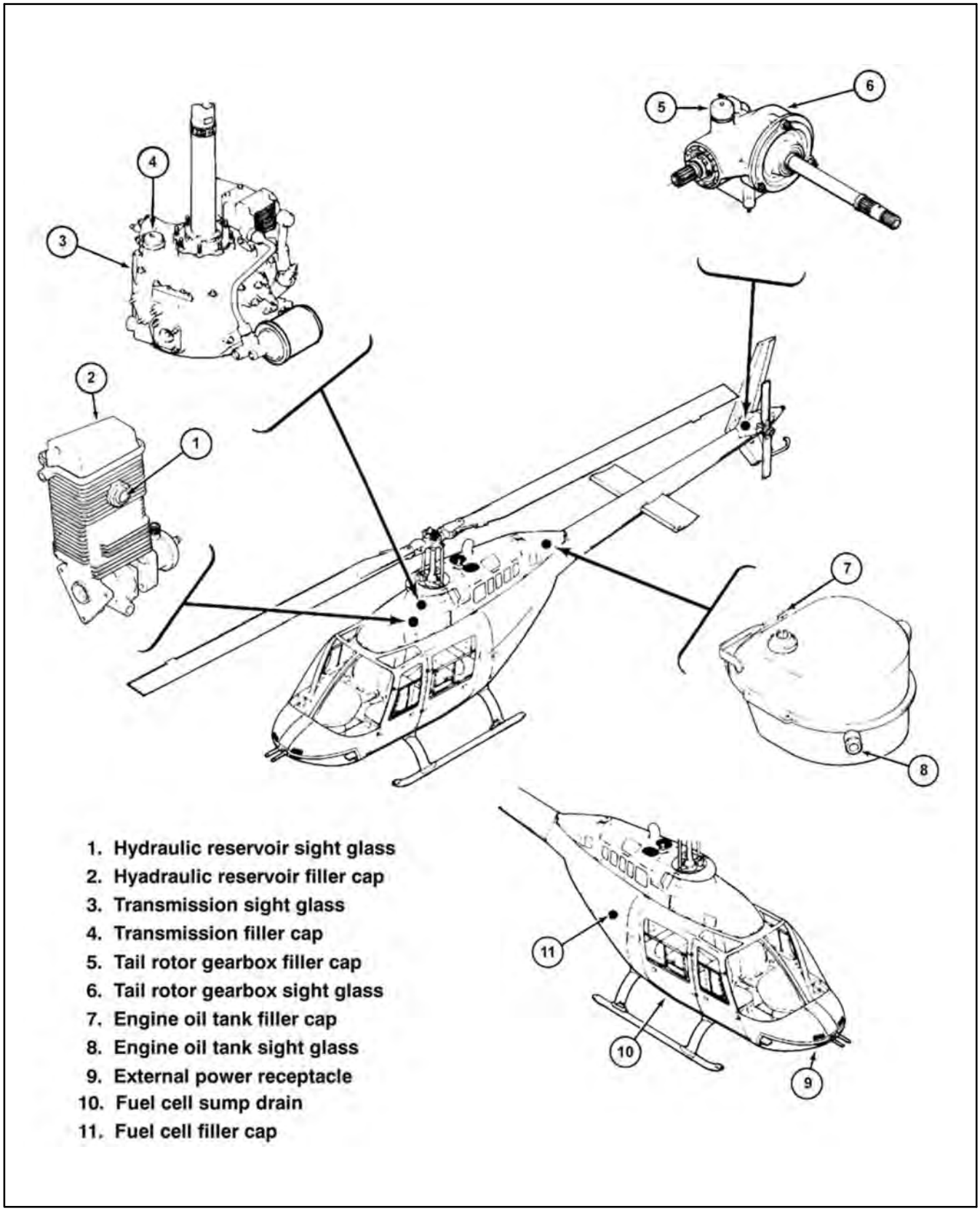

Figure 3-1. Servicing Diagram (Sheet 1 of 2)

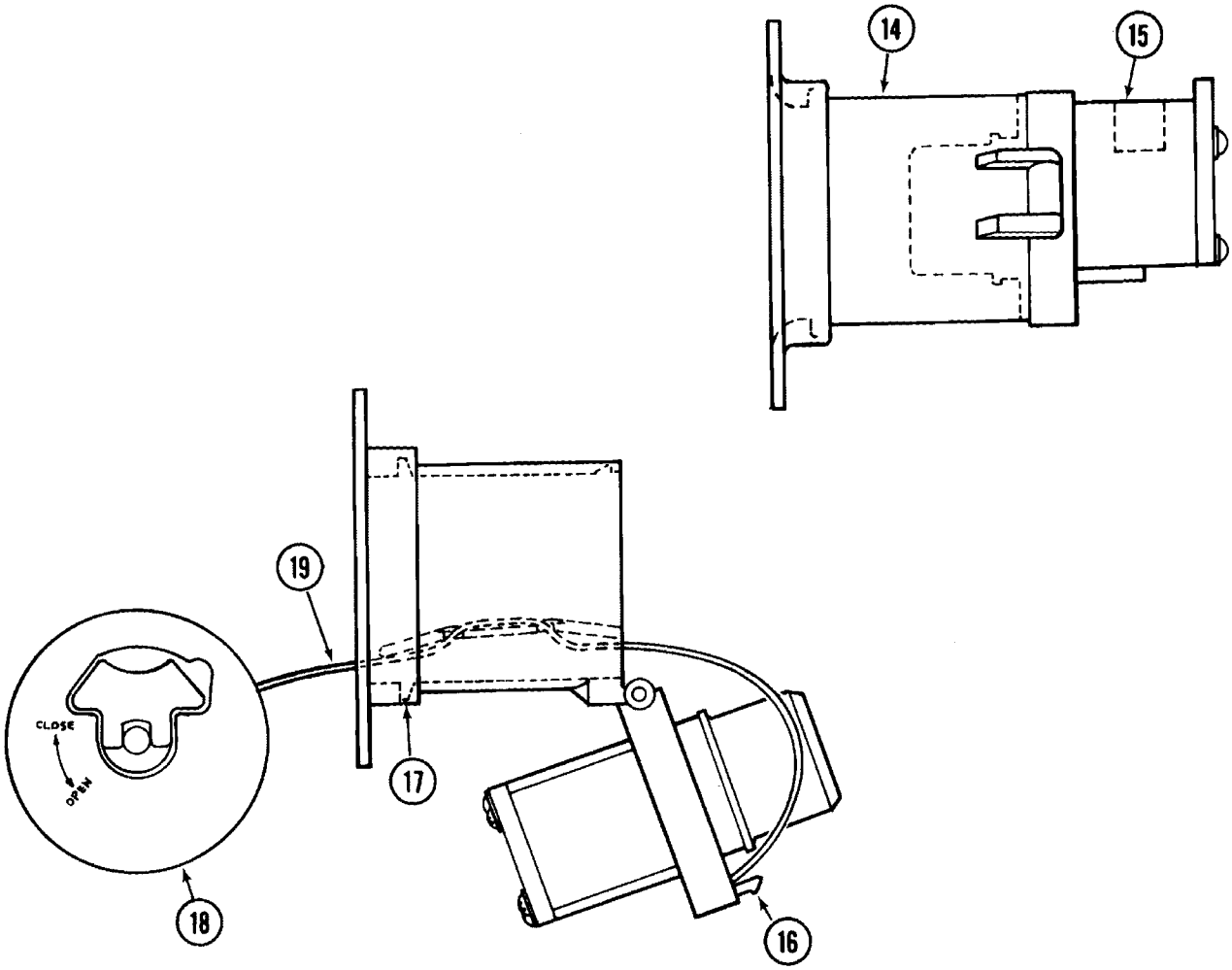

DETAIL A

14. Housing
15. Module
16. Latch
17. Tool, latch
18. Cap
19. Lanyard

Figure 3-1. Servicing Diagram (Sheet 2)

	U.S. MIL CODE	NATO CODE	MIL SPEC	COMMERCIAL DESIGNATION (SPEC)	BRITISH SPEC (DESIGNATION)	WT	NOTES
PRIMARY FUELS	JP–5	F–44	MIL–DTL–5624	NONE	DEF STAN 91–86 (AVCAT/FSII)	6.8	1, 4a
	JP–8	F–34	MIL–DTL–83133		DEF STAN 91–87 (AVTUR/FSII)	6.7	1, 4a, 5, 8
ALTERNATE FUELS	NONE	F–35	MIL–DTL–83133	JET A–1 (ASTM D–1655)	DEF STAN 91–91 (AVTUR)	6.7	2, 3, 4b, 5, 6
	NONE	NONE	NONE	JET A (ASTM D–1655)	NONE	6.7	2, 3, 4b, 5, 6
	JP–4	F–40	MIL–DTL–5624	JET B (ASTM D–6615)	DEF STAN 91–88 (AVTAG/FSII)	6.5	2, 3, 4b, 5, 6, 7

NOTES:

1. All U.S. military and NATO fuels, except F–35, contain an additive package that includes Fuel System Icing Inhibitor (FSII).
2. Commercial fuels are available with and without FSII. JET A+ is a common name used to refer to JET A fuel that has been premixed with FSII. (See note 3.)
3. PRIST. The commercial FSII additive, PRIST, may be used with commercial jet fuel (JET A/JET A–1/JET B). PRIST is equivalent to the military FSII additive. It is available in two forms: (1) Aerosol cans that are discharged into the fuel as it is pumped into the aircraft or (2) premixed into the fuel. When PRIST is premixed with the fuel it provides anti–icing protection equivalent to that provided by military jet fuel and is authorized for use. PRIST in aerosol cans is not authorized for use since it does not mix well with fuel, has a tendency to settle to the bottom of fuel tanks, and may damage fuel system seals and fuel tank materials.
4. Fuel definitions:
   a. Primary fuel — A fuel that the aircraft was designed to use for continuous unrestricted operations.
   b. Alternate fuel — A fuel that the aircraft can use without operational restrictions. Alternate fuels may have long–term durability or maintainability impacts if used for extended periods of operation (several months).
   c. Restricted fuel — A fuel that imposes operational restrictions on the aircraft. These fuels may be used only if no primary or alternate military or commercial fuels are available.

CAUTION

Any helicopters scheduled for immediate sea duty shall be fueled with F–44 (JP–5) only. This restriction is necessary to ensure shipboard safety.

5. JP–4, JP–8, and all commercial jet fuels shall not be defueled into shipboard JP–5 fuel storage tanks because the flashpoint of these fuels is less than 140 °F.
6. These fuels may also be designated JP–1 or J–1 by commercial suppliers.
7. JP–4 (F–40) has been replaced by JP–8 (F–34) in U.S. and NATO service. JP–4 (F–40) and JET B are no longer widely available worldwide but may still be encountered in some areas.
8. Unless specifically authorized by NAVAIR, USN/USMC aircraft shall not use JP–8+100 (NATO F–37) fuel due to problems associated with the compatibility of this fuel with fuel handling system filtration components ashore and aboard ship.

Note

If any USN/USMC aircraft are inadvertently serviced with JP–8+100 (NATO F–37) at USAF/U.S. Army installations where this fuel is available, notification shall be provided to the home station fuels department of the aircraft prior to requesting defuel. Special defueling procedures (contained in NAVAIR 00–80T–109) must be adhered to.

Figure 3-2. Specification/TH–57 Fuel Reference Chart (Sheet 1 of 2)

SYSTEM	SPECIFICATION	
	STANDARD	ALTERNATE
FUEL FUSELAGE CELL	JP–5 JP–8	ASTMD–1655 Jet A/Jet A–1
OIL ENGINE	AEROSHELL 560	MOBIL JET OIL 254 or 291 EXXON ETO 2197
TRANSMISSION	AEROSHELL 555	ROYAL TURBINE OIL 555
TAIL ROTOR GEARBOX	AEROSHELL 555	ROYAL TURBINE OIL 555
MAIN ROTOR HUB GRIPS	MIL–G–81322	
HYDRAULIC SYSTEM	MIL–H–83282	MIL–H–5606
ROTOR BRAKE	MIL–H–83282	MIL–H–5606

WARNING

AEROSHELL 560 is the primary oil for the engine. If any other oil is added, flight time is limited to 5 hours because of the tendency of the oils to create sludge resulting in bearing failure. Prior to adding alternate oil, maintenance shall be consulted and a VIDS/MAF shall be initiated. Alternate oil may be mixed in the transmission with no flight time limit; however, a VIDS/MAF shall be initiated upon return to home field.

Figure 3-2 Specification/TH–57 Fuel Reference Chart (Sheet 2)

SYSTEM	AVAILABLE
Fuel cell	91 U.S. gallons
Fuel cell BUNO 161XXX	76 U.S. gallons
Engine	11.2 U.S. pints
Transmission	10 U.S. pints
Tail rotor gearbox	0.375 U.S. pints
Hydraulic system	2.25 U.S. pints

Figure 3-3. System Capacities

3.1.7 Maintenance Step

A fixed step is attached to the lower left side of the fuselage, aft of the cabin door, to assist in access to the roof of the helicopter for maintenance purposes.

3.1.8 Installation and Removal of Ground Handling Wheels

WARNING

Pilot's flight helmet shall be worn, with visor down and chin strap fastened, prior to installing/removing ground handling wheels.

1. Slip the wheel (Figure 3-4) over the skid and ensure it is fully engaged, thus permitting the cammed–out area to lock on the three bushings.
2. Line up the skid hole to match quick–release pinhole.

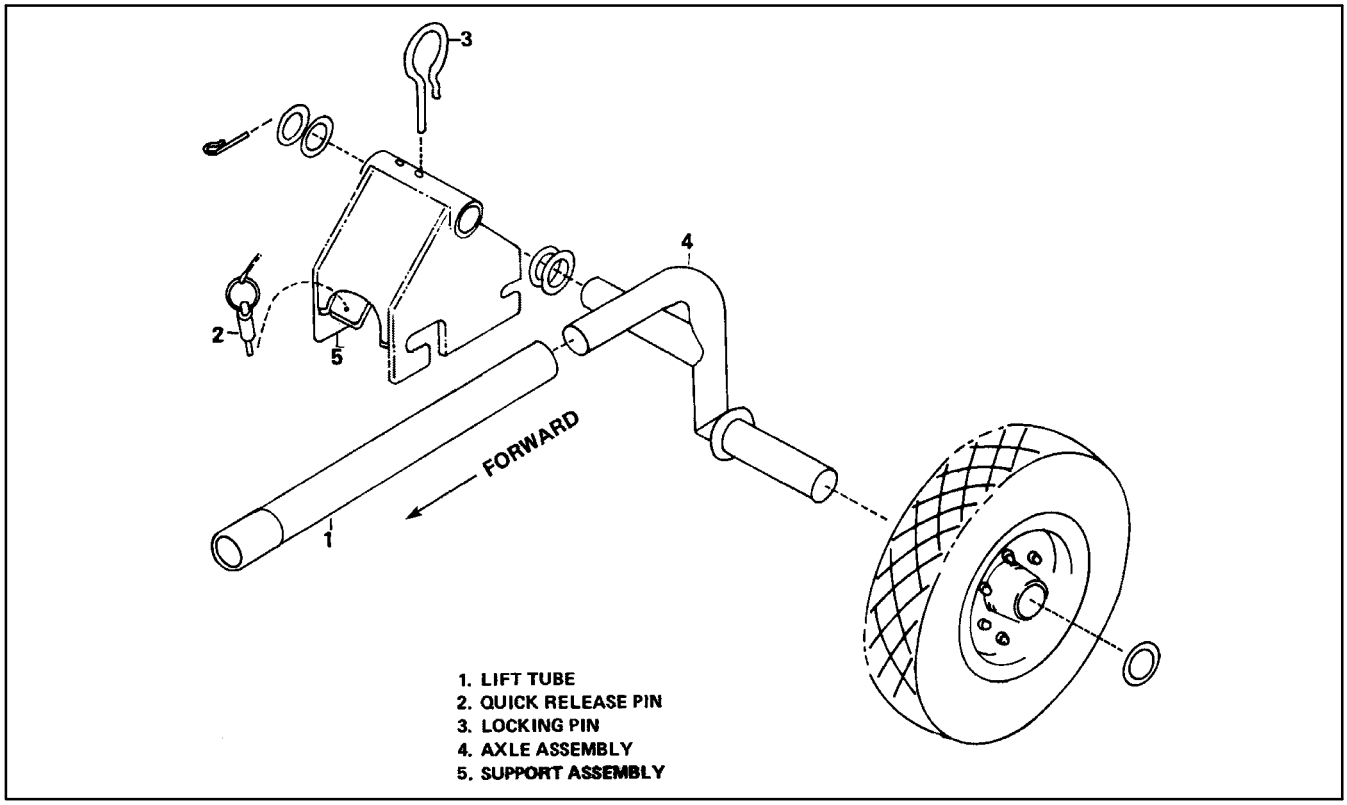

Figure 3-4. Ground Handling Wheel

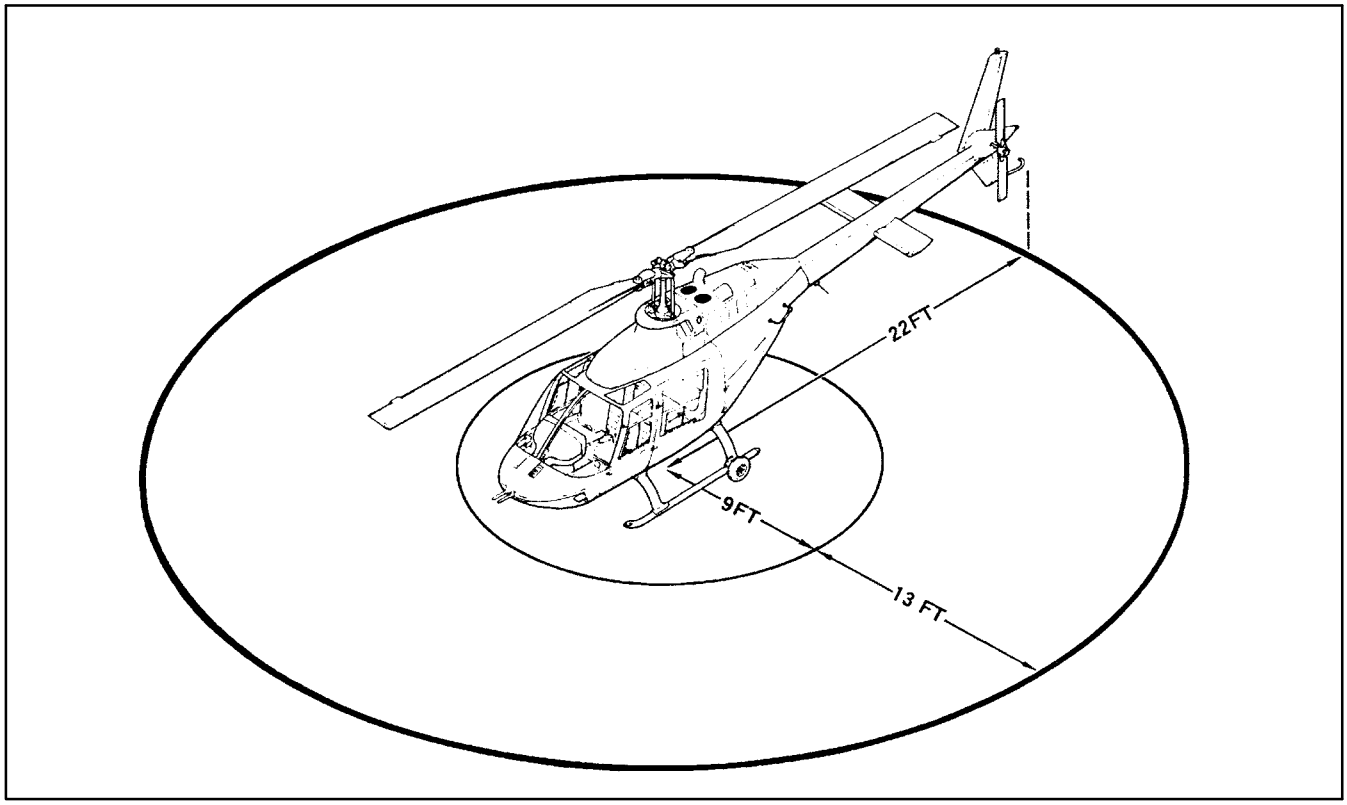

Figure 3-5. Turning Radius

3. Insert quick–release pin.
4. Insert the bar and pull to raise the skid until the locking hole is visible.
5. Insert the locking pin.
6. Remove bar.

WARNING

While raising or lowering the aircraft, maintain positive control of the ground handling assembly lift tube and keep clear of the landing gear skids.

3.2 SERVICING GUIDELINES

General servicing guidelines are as follows:

1. Allow an adequate cooldown period (approximately 10 minutes) after flight to ensure accurate quantity readings.
2. Use of a funnel or hose is recommended during servicing to prevent spillage.
3. Use VIDS/MAFs to record approximate amounts of fluids added during servicing.

3.2.1 Servicing Engine Oil System

The oil tank filler cap has a dipstick attached to determine the quantity of oil in the tank. The tank should be kept filled to the dipstick oil level mark. Service the system as follows:

1. Remove oil filler cap from oil tank (Figure 3-1).
2. Add oil to the prescribed level.
3. Replace oil filler cap. Ensure proper fit and security.

3.2.2 Servicing Transmission Oil System

A combination oil filler cap and vent is located on the upper right side of the transmission (Figure 3-1). The oil level is observed through a sight glass on the right side and must be visible. Service the system as follows:

1. Remove filler cap.
2. Add oil to prescribed level.
3. Replace filler cap.

CAUTION

Do not fill above center dot on sight glass. Overfilling may cause foaming and loss of transmission oil.

3.2.3 Servicing Hydraulic System

The hydraulic reservoir and filler cap assembly is located just forward of the transmission (Figure 3-1). Fluid level is observed through a sight glass on the right side. The filler cap is mounted directly on top of the reservoir and is secured with a cotter pin.

Note

Prior to removing the cotter pin to open the filler cap, wipe any water or other contaminants away from the filler cap and surrounding area.

Service the system as follows:

1. Remove cotter pin and lift filler cap from reservoir.
2. Add fluid until the level is just at the bottom of the screen.
3. Secure the filler cap properly and reinsert the cotter pin.
4. Ensure the cotter pin is properly seated by viewing it from the transmission access door.

Note

- It is easy to improperly seat the filler cap and cause a leak. Ensure the lip of the cap is seated on the rubber gasket and not canted or touching the reservoir edge.
- One or more aircraft can be serviced by one hydraulic fluid can; however, an opened hydraulic fluid can cannot be saved for repetitive use. Once the servicing can has been used, it is deemed contaminated.

CHAPTER 4

Operating Limitations

4.1 INTRODUCTION

The flight and engine limitations set forth in this chapter are the direct result of the flight test programs and actual operational experience. Compliance with these limits will allow the pilot to safely perform the assigned missions and permit the pilot to derive maximum utilization from the helicopter. Additional limits concerning maneuvers, cg, and loading are also covered in this chapter. Close attention must be given to the text because it represents limitations that are not necessarily repeated on instrument markings. Refer to Figure 4-2 for rotor engagement/disengagement wind limitations.

Note

If aircraft structural, rotor, or engine limitations are exceeded, record the fact on amaintenance action form, including limit(s) exceeded, range, time beyond limits, and any additional data that would aid maintenance.

4.2 INSTRUMENT MARKINGS

Refer to Figure 4-3 for instrument markings.

4.3 ENGINE LIMITATIONS

4.3.1 N_f Rpm

POWER ON: Minimum N_f is 97 percent. Maximum continuous N_f is 100 percent. N_f overspeeds are determined on a sliding scale (Figure 4-1) depending on TOT, N_f percentage, and duration.

AVOID RANGE (STEADY-STATE OPERATION): 75 to 88 percent N_f with engine torque greater than 33 percent. Flight in this range shall be recorded on a MAF to ensure documentation and shall include duration. The life cycle of the N_f turbine is limited to a cumulative total of 60 seconds within the AVOID RANGE and shall be replaced once exceeded.

WARNING

Use of the twist grip to control N_f RPM in cases of simulated or actual emergency, may result in flight into the AVOID RANGE. A cumulative total in excess of 60 seconds in this range requires maintenance action and without could result in catastrophic failure of the N_f turbine.

Note

Transient Operation when manipulating the twist grip from flight idle to full open is allowed and requires no MAF.

4.3.2 N_g Rpm

Idle gas producer (N_g) rpm is 59 to 65 percent. The normal operating range is from 59 to 105 percent. A maximum transient of 106 percent is allowed for 15 seconds.

4.3.3 Engine Oil Pressure

Minimum engine oil pressure is 50 psi with N_g below 79 percent. Minimum engine oil pressure with N_g between 79 and 94 percent is 90 psi. With N_g above 94 percent, the minimum engine oil pressure is 115 psi. Maximum engine oil pressure is 130 psi except for temporary conditions up to 150 psi maximum immediately following a cold-weather start.

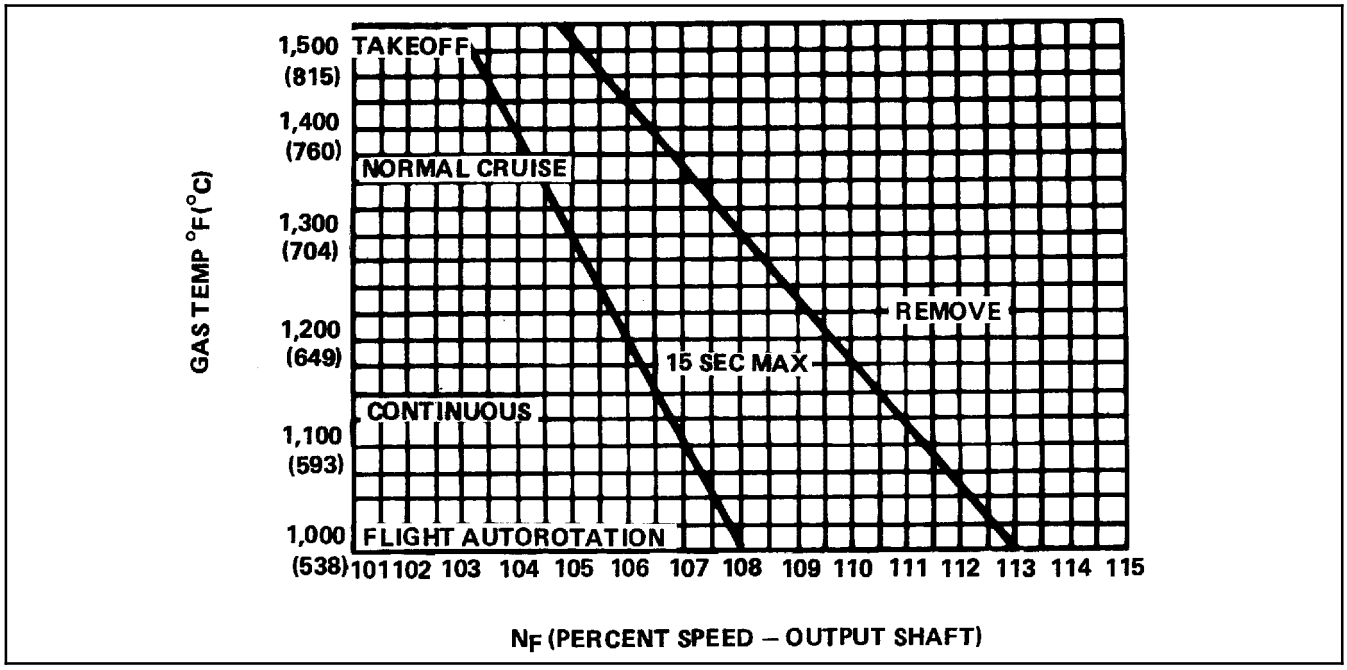

Figure 4-1. N_f Overspeed Chart

4.3.4 Engine Oil Temperature

Engine oil temperature limits are 0° to 107 °C.

4.3.5 Turbine Outlet Temperature

1. During start.

TEMPERATURE RANGE	TIME
Up to 810 °C	No Limit
810° to 927 °C	Over 10 seconds
927 °C or above	Not allowed

2. During power transient.

TEMPERATURE RANGE	TIME
Up to 738 °C	No limit
738° to 810 °C	5 minutes
810° to 843 °C	6 seconds
Above 843 °C	Not allowed

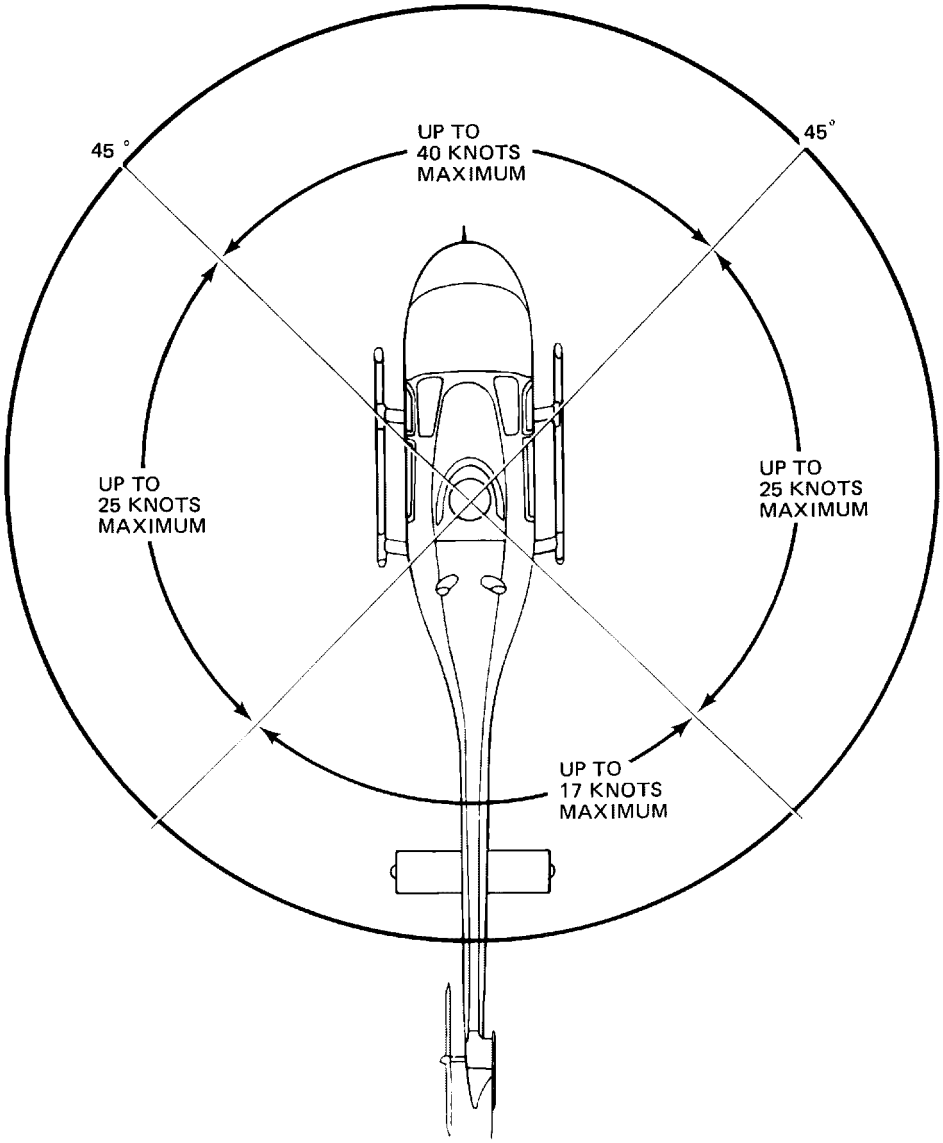

Figure 4-2. Rotor Engagement/Disengagement Wind Limitations

ENGINE OIL TEMPERATURE

- 0° TO 107 °C Continuous Operation
- 107 °C Maximum

ENGINE OIL PRESSURE

- 50 PSI Minimum Below 79% N_g
- 90 PSI Minimum for 79 to 94% N_g
- 115 PSI Minimum Above 94% N_g (Double Wide Arc)
- 50 PSI Minimum, 130 PSI Maximum

TRANSMISSION OIL PRESSURE

- 30 to 50 PSI Continuous Operation
- 30 PSI Minimum, 70 PSI Maximum

TRANSMISSION OIL TEMPERATURE

- 15° to 110 °C Continuous Operation
- 110 °C Maximum

LOADMETER

- 70% Maximum

FUEL PRESSURE

- 4.0 PSI Minimum
- 4.0 to 30.0 PSI Continuous Operation

AIRSPEED — KNOTS

- 0 to 130 Knots Continuous Operation
- 130 Knots Maximum
- 100 Knots Maximum for Autorotation

FUEL QUANTITY

- Empty

Figure 4-3. Instrument Markings (Sheet 1 of 3)

TORQUE

0 to 85.0% Continuous Operation
85.0 to 100.0% Military Power Range (5-Minute Limit)

100.0% Maximum 100.0 to 110% Power Transient (5-Second Limit)

TURBINE OUTLET TEMPERATURE

100° to 738 °C Continuous Operation

738° to 810 °C Military Power Range (5-Minute Limit)

810° to 843 °C Power Transient (6-Second Limit)

927 °C Maximum During Start (10-Second Limit)

LSI 017-0121-0

Figure 4-3. Instrument Markings (Sheet 2)

GAS PRODUCER

59.0 to 105.0% Normal Operation

105.0% Maximum Continuous

106.0% Transient (15-Second Limit)

DUAL TACHOMETER

POWER TURBINE INDICATOR

97% Minimum Operation

97 to 100% Continuous Operation

100% Maximum Continuous

ROTOR INDICATOR

50.0 to 60.0% Accelerate through this Range

90.0% Minimum Operation

90.0 to 107.0% Normal Operation

107.0% Maximum

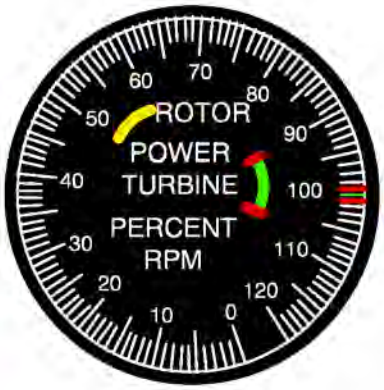

TH-57C

VOLTMETER

AC — 115 ± 4 VAC

DC (Main GEN) 26.5 to 29 volts

Note

22 VDC Minimum for a battery start.

TH-57B

DC VOLTAGE

Figure 4-3. Instrument Markings (Sheet 3)

4.4 ROTOR LIMITATIONS

POWER ON: Minimum N_r is 97 percent. Maximum continuous N_r is 100 percent.

POWER OFF: The normal operating range is 90 to 107 percent N_r. Transient allowable N_r is 107 to 114 percent for 5 seconds.

4.5 TRANSMISSION OIL SYSTEM LIMITS

Transmission oil pressure limits are 30 to 50 psi for continuous operation. Minimum oil pressure is 30 psi and maximum is 70 psi. Oil temperature limits are 15° to 110 °C.

Note

Check the transmission oil pressure with the twist grip full open. Illumination of the TRANS OIL PRESS caution light is common while the twist grip is at flight idle, however, the gauge should indicate positive transmission oil pressure.

4.6 TORQUE

Maximum continuous torque is 85 percent. Military power limit is 100 percent for 5 minutes. Transient torque of 100 to 110 percent is allowed for 5 seconds.

4.7 FUEL PRESSURE (INDICATED)

Allowable fuel boost pump pressure is 4 to 30 psi.

4.8 STANDBY GENERATOR LIMITATIONS (C)

Note

With main generator on, the standby generator loadmeter should indicate 10 percent load or less. Momentary testing of standby generator under full bus load is permitted on the ground or in the air.

Prolonged operation of the standby generator while it is the primary power supply to the essential No. 1 bus is prohibited at speeds below 65 KIAS.

4.9 ROTOR BRAKE LIMITATIONS

Rotor brake should be applied between 38 and 30 percent N_r during normal operations.

4.10 STARTER LIMITATIONS

Limit starter energizing time to the following:

EXTERNAL POWER	BATTERY
25 seconds — ON	40 seconds — ON
30 seconds — OFF	60 seconds — OFF
25 seconds — ON	40 seconds — ON
30 seconds — OFF	60 seconds — OFF
25 seconds — ON	40 seconds — ON
30 minutes — OFF	30 minutes — OFF

Note

If a light-off occurs within the first 20 seconds of the start sequence, the starter may be operated for 60 seconds with a 60-second cooling period. Three such attempts can be made in a 30-minute period, then wait 30 minutes to allow the starter to cool.

4.11 AIRSPEED LIMITS

Note

All airspeed values are calibrated airspeed except when indicated airspeed is specifically stated.

1. Sideward/rearward flight.

DENSITY ALTITUDE FEET	MAX SIDEWARD KNOTS	MAX REARWARD KNOTS
0 to 1,000	25	15
1,000 to 2,000	20	15
2,000 to 4,000	15	15
4,000 to 6,000	10	10
6,000 to 10,000	5	5

2. Maximum rate of climb — 50 KIAS.
3. Minimum IFR speed (V_{mini}) — 65 KIAS.
4. Maximum speed AFCS OFF (V_{ne}):

   3,000-pound gross weight and below — 130 KIAS.

   Decrease V_{ne} 3.5 KIAS per 1,000 feet above 3,000-foot density altitude.

   Above 3,000-pound gross weight — 122 KIAS.

   Decrease V_{ne} 7.0 KIAS per 1,000 feet above 3,000-foot density altitude (see Figure 4-4).
5. Maximum speed IFR or AFCS ON (V_{nei}):

   3,000-pound gross weight and below — 122 KIAS.

   Decrease V_{nei} 3.5 KIAS per 1,000 feet above 3,000-foot density altitude.

   Above 3,000-pound gross weight — 122 KIAS.

   Decrease V_{nei} 7.0 KIAS per 1,000 feet above 3,000-foot density altitude (see Figure 4-4).
6. Maximum airspeed with any combination of doors off is 110 KIAS.
7. Maximum autorotational airspeed is 100 KIAS.
8. Turbulence penetration airspeed is 80 KIAS.

4.12 ALTITUDE LIMITATIONS

Note

OPNAVINST 3710.7 requires the Pilot in Command of an unpressurized aircraft to continuously use supplemental oxygen when cabin altitude exceeds 10,000 feet.

Maximum operating altitude:

AFCS OFF: 3,000-pound gross weight and below — 20,000-foot pressure altitude; 18,000-foot density altitude.

Above 3,000-pound gross weight — 16,000-foot pressure altitude; 13,000-foot density altitude.

IFR or AFCS ON: 3,000-pound gross weight and below — 11,500-foot pressure altitude; 13,500-foot density altitude.

Above 3,000-pound gross weight — 8,500-foot pressure altitude; 11,000-foot density altitude.

AIRSPEED LIMITATIONS-KNOTS-IAS						
3000 LB GW AND BELOW IFR OR AFCS ON - REDUCE VNE 8 KNOTS						
H_p	OAT - °C					
1000 FT	46	40	20	0	-20	-40
0	128	130	130	130	130	130
2	121	122	130	130	130	130
4	112	114	122	129	130	130
6	103	106	113	122	130	130
8	96	97	105	113	122	130
10	87	89	96	104	113	122
12	79	81	88	96	104	113
14		73	80	87	96	104
16				78	87	96
18					78	87
20						78
ABOVE 3000 LB GW						
H_p	OAT - °C					
1000 FT	46	40	20	0	-20	-40
0	118	122	122	122	122	122
2	102	106	122	122	122	122
4	85	89	104	121	122	122
6	69	73	88	103	121	122
8	52	56	70	86	103	122
10			53	69	86	104
12				52	69	87
14					51	69
16						51

Figure 4-4. Airspeed Limitations Placard

4.13 CLIMB/DESCENT LIMITS

Climb and descent rates during flight in Instrument Meteorological Conditions (IMC) conditions should not exceed 1,000 feet per minute.

4.14 ACCELERATION LIMITS

Acceleration limits are positive 2.5g's and positive 0.5g at maximum gross weight.

4.15 WEIGHT LIMITATIONS

Maximum gross weight internally is 3,200 pounds. Maximum gross weight including external cargo is 3,350 pounds.

4.16 WEIGHT AND CENTER-OF-GRAVITY LIMITS

Center-of-gravity limits are shown in Figure 4-5. The shaded area of the charts indicates conditions where use of AFCS is prohibited.

The basic aircraft envelope may be used if all actuator position indicators are centered and the FCS circuit breakers are pulled.

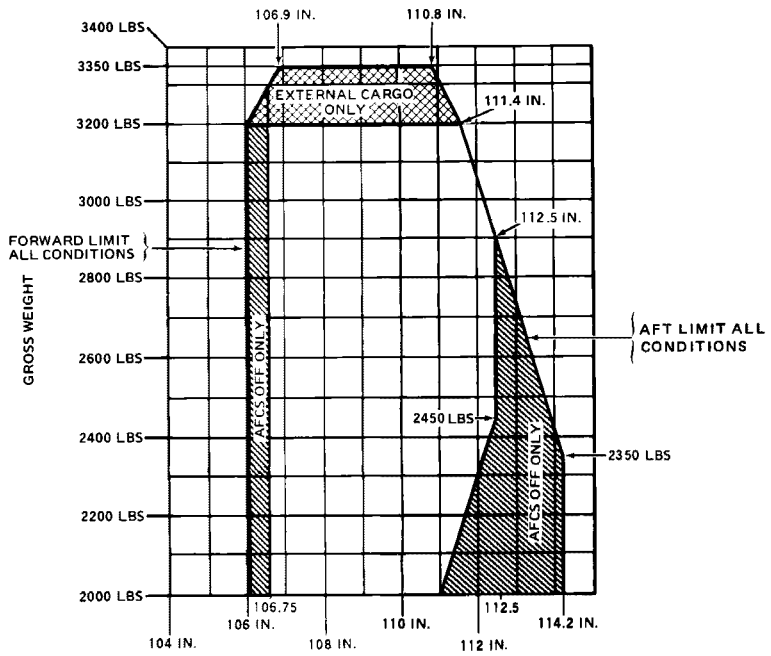

LONGITUDINAL CENTER OF GRAVITY -- FUSELAGE STATIONS

EXTERNAL LOAD CENTER OF GRAVITY VS GROSS WEIGHT

N4/89
206900-345C

LATERAL VS LONGITUDINAL CG LIMITS ENGLISH UNITS

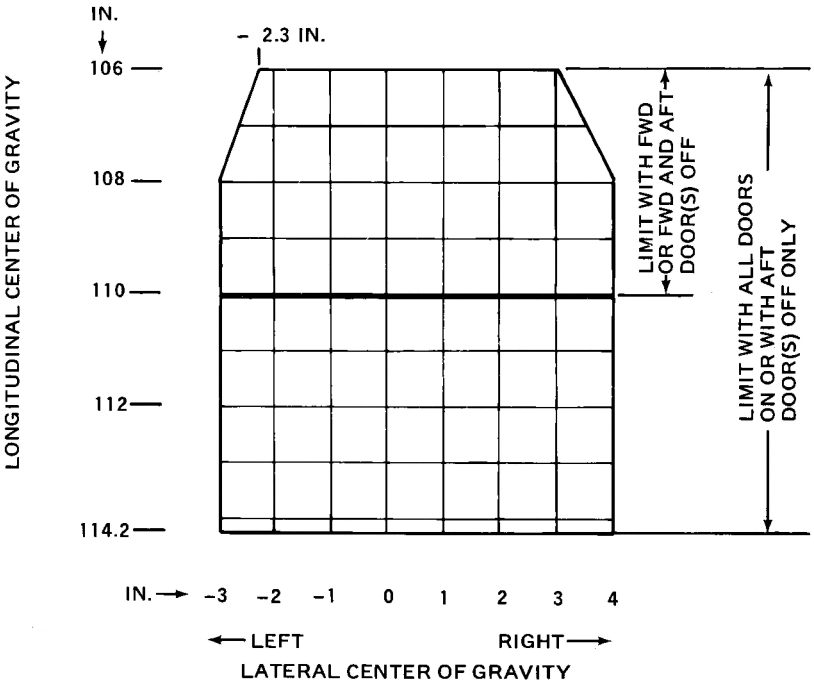

Figure 4-5. Lateral and Longitudinal Center-of-Gravity Limits

4.16.1 Longitudinal Center-of-Gravity Limits

1. Cg limits with AFCS OFF are from station 106.0 to 114.2.
2. Cg limits with AFCS ON are from station 106.75 to 112.5.
3. The aft limit varies, depending on gross weight, for all operations.
4. Refer to Figure 4-5 for lateral and longitudinal cg limits.

Note

Lateral cg limits exist, however, all allowable configurations fall within these limits.

4.17 MINIMUM CREW REQUIREMENTS

1. The minimum flightcrew consists of one pilot and a qualified observer.
2. The minimum flightcrew for IFR operations is two pilots, with at least one being an instrument-rated pilot.
3. The minimum crew weight is 180 pounds.

4.18 REQUIRED EQUIPMENT FOR IMC FLIGHT

The following equipment must be operative prior to entering instrument meteorological conditions in the TH-57C:

1. Cyclic force trim system.
2. MINISTAB flight control system (pitch and roll).
3. Main generator.
4. Standby generator.
5. Battery protection circuit.
6. Instantaneous vertical speed indicator.
7. Two attitude indicators (one automatically powered by approved standby battery source in the event of power loss).
8. One operable communication system.
9. One operable navigation system appropriate to the routes to be flown.
10. Radar altimeter.
11. Other equipment as required by the operating rules.

4.19 PROHIBITED OPERATIONS

The TH-57B/C helicopter is approved for VFR operations in day and night nonicing conditions.

The TH-57C helicopter is approved for IFR operations in day and night nonicing conditions. IFR operations are not permitted with any doors removed or with external loads.

4.20 PROHIBITED MANEUVERS

The following are prohibited in-flight maneuvers:

1. Aerobatic maneuvers.
2. Angles of bank exceeding 60°.

WARNING

Engine failures at high angles of bank may cause aircraft roll reversal characteristics.

3. Protracted operations in the AVOID and CAUTION areas of the height velocity diagram (Figure 4-6).
4. Intentional entry into blade stall or vortex ring state.
5. Hovering turns exceeding a rate of 45° per second.

4.21 REQUIRED EQUIPMENT FOR NIGHT FLIGHT

1. All instrument and circuit breaker panel lights.
2. All exterior lights.
3. Operable communication radio.
4. Attitude gyro.
5. Radar altimeter.

4.22 REQUIRED EQUIPMENT FOR OVER WATER AND SHIPBOARD OPERATIONS

1. Radar altimeter.
2. Vertical Speed Indicator.

Note

Due to weight and space restrictions associated with the TH-57, liferafts are not required.

MINIMUM HEIGHT FOR SAFE LANDING AFTER ENGINE FAILURE

MINIMUM HEIGHT
TH-57

EXAMPLE A

WANTED

MAXIMUM GROSS WEIGHT RESTRICTION FOR SAFE LANDING AFTER ENGINE FAILURE

KNOWN

DENSITY ALTITUDE = 5700 FEET

METHOD

ENTER DENSITY ALTITUDE HERE
MOVE RIGHT TO DIAGONAL LINE
MOVE DOWN, READ GROSS WEIGHT = 2800 LB

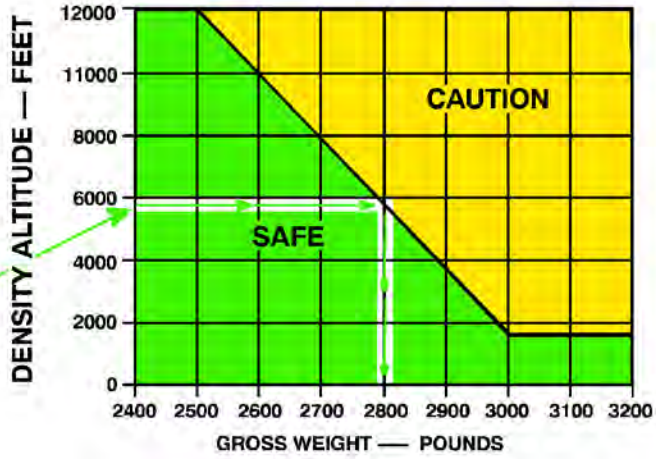

EXAMPLE B

WANTED

MINIMUM INDICATED AIRSPEED FOR SAFE LANDING (WITHOUT AIRCRAFT DAMAGE) AFTER ENGINE FAILURE

KNOWN

SKID HEIGHT ABOVE GROUND = 300 FEET

METHOD

ENTER SKID HEIGHT HERE
MOVE RIGHT TO CRITICAL POINT ON HEIGHT VELOCITY CURVE
MOVE DOWN, READ INDICATED AIRSPEED = 20 KNOTS (MINIMUM)

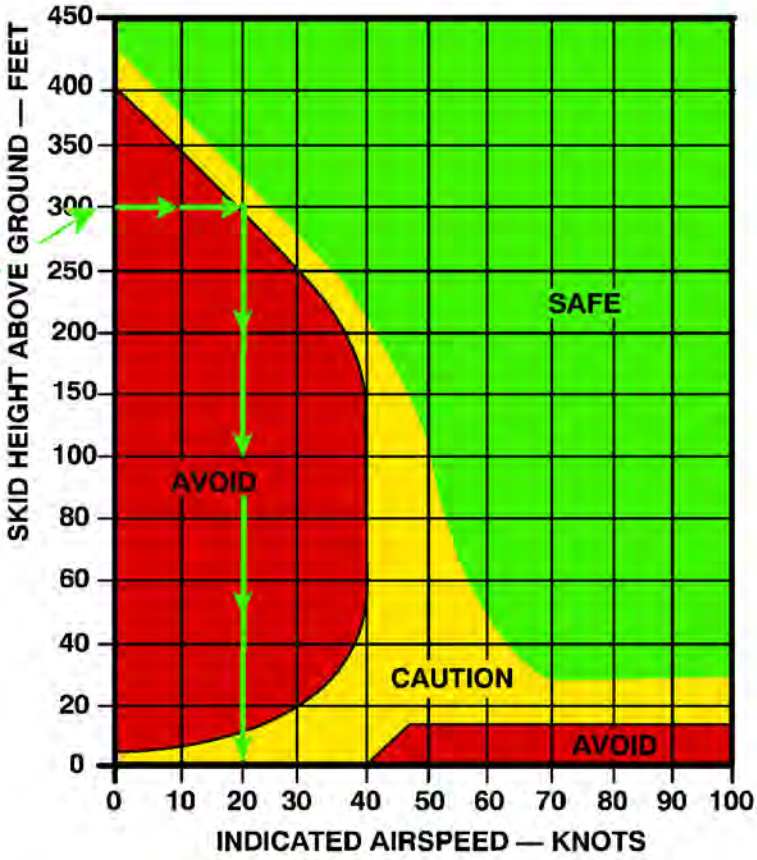

DATA BASIS: DERIVED FROM FLIGHT TEST OF SIMILAR TYPE AIRCRAFT

Figure 4-6. Height Velocity Diagram

PART II

Indoctrination

Chapter 5 — Indoctrination

CHAPTER 5

Indoctrination

5.1 INTRODUCTION

The operating procedures contained in this manual apply to TH–57 helicopters when performing assigned missions within their capabilities. The information contained herein is to clarify, amplify, and standardize those areas where there is room for variance of interpretation by individual commands. These procedures cannot possibly cover every conceivable situation, but are intended to govern most frequently encountered situations. The safety and success of any mission are of paramount importance. In emergency situations under unusual circumstances or in compound emergency situations, deviation from established procedures may be necessary. Such deviation is permitted, provided that adherence to established procedures would prove to be dangerous or impossible.

5.2 GROUND TRAINING SYLLABUS

A ground training program shall be established that will ensure thorough training and a high degree of readiness for all flight personnel. The ground training that follows is to be used as a guide by type commands in establishing specific guidelines and requirements.

5.2.1 Pilot Ground Training

1. Every pilot checking out in the TH–57 helicopter shall be required to complete a course of ground school instruction in the TH–57. This course of instruction should be not less than 10 hours.
2. A written examination shall be given on the NATOPS flight manual and other publications as required.
3. Instruction and examination shall be completed on the following subjects:
   a. Helicopter performance.
   b. Emergency procedures.
   c. Weight and balance.
   d. Communications.
   e. Publications.
   f. Flight planning and navigation.
   g. Flight safety.
   h. Survival equipment.

5.2.2 Aircrew Ground Training

An aircrew ground training syllabus, as established by type commands, will include such topics as publications, ground handling and servicing, communications, and safety and survival equipment.

5.3 FLIGHT TRAINING SYLLABUS

A flight training syllabus, established by type commander, shall be designed so as to accomplish maximum training for the mission and tasks assigned. The syllabus must be flexible and tailored to fit the situation and the varying nature of the tasks and commitments.

5.3.1 Pilot Flight Training

The pilot flight syllabus will contain the following phases:

1. Familiarization.
2. Instruments.
3. Navigation.
4. Night.
5. Formation.
6. Shipboard operations.

5.3.2 Aircrew Flight Training

The aircrew flight syllabus will contain the following phases:

1. Familiarization.
2. External cargo operations.
3. Confined–area landing operations.
4. General flight duties.

5.4 FLIGHTCREW DESIGNATION, QUALIFICATIONS, AND REQUIREMENTS

The flightcrew qualifications and requirements as set forth in the following paragraphs are minimums and are not to be interpreted as limiting in any way the establishment of higher requirements by proper authority.

5.4.1 Designation

A naval aviator or aviation pilot will be designated as qualified in model only after he has previously been designated as a helicopter pilot under the provisions of OPNAVINST 3710.7 series and/or qualified under OPNAVINST 3740.2 series. A pilot who has qualified in one of the helicopter classifications shall have a certificate thereof, signed by the qualifying authority. This certificate shall state the model helicopter and modification in which he is qualified and shall be placed in his aviator's flight log book, officer qualification jacket, or enlisted service record book, as appropriate.

5.4.2 Designating Authority

Commanding officers or higher authority in the chain of command are empowered to designate pilots qualified in model and issue certification. The immediate superior in command to the commanding officer or higher authority may assume this function. The authority assuming the function shall issue appropriate instructions.

5.4.3 Qualifications

5.4.3.1 Pilot Qualified in Model

A Pilot Qualified In Model (PQM) shall have satisfactorily completed a flight training syllabus or have demonstrated comparable proficiency to include the capability of executing all assigned missions and tasks. He shall further meet the requirements as set forth in detail in OPNAVINST 3710.7 series and have satisfactorily completed a NATOPS evaluation.

5.4.3.2 Assignment Requirements

1. A pilot designated as qualified in model shall command the aircraft and occupy one of the control positions on all flights. A transition pilot (pilot under instruction), rated safe for solo, may command the aircraft on all types of operational training missions within his capabilities and which, in the opinion of the commanding officer, are best suited to instill pilot confidence and aircraft command responsibilities.
2. On all flights, a qualified observer shall occupy the remaining seat to ensure adequate visual surveillance. A qualified observer is anyone who is thoroughly briefed in cockpit conduct and safety, including intercom system operation and lookout responsibilities.
3. All instructional flights shall be under the direct supervision of a pilot qualified to command the TH–57.

5.4.3.3 Functional Checkflight Pilot

Functional checkflight pilots shall be designated in accordance with provisions established by appropriate authorities.

5.4.3.4 Aircrewman

Aircrewmen are assigned aboard the helicopter for the performance of duties necessary for the successful completion of the mission of the helicopter. Aircrewmen must be qualified in all phases as set forth in Chapter 2 of this manual and, in addition, must meet the requirements of OPNAVINST 3710.7 series.

The success of any mission will depend on the degree of crew resource management and the proficiency of assigned personnel. Duties will be widely varied and require imagination and determination on the part of the aircrewman to meet the many and varied requirements of the mission. The aircrewman performs essential functions as an integral member of the helicopter crew. His presence in the cargo compartment or copilot seat is desirable on all flights regardless of the mission. On all missions the aircrewman will act as an observer, always being alert for other aircraft or obstacles to flight. He will supervise internal cargo loading under the direction of the pilot and orally direct the pilot in external cargo pickups. He will supervise the embarking and debarkation of all passengers. The crewman can, many times, detect systems failure before the pilot does and inform him of potential malfunctions before the condition becomes serious.

5.4.3.5 Requirements and Designations

An aircrewman is assigned aboard the helicopter for the performance of duties necessary for the successful completion of the mission. These aircrew qualifications and requirements listed below are minimum and are not to be interpreted as limiting in any way the establishment of higher requirements by proper authority.

5.4.3.5.1 Qualifications

1. Must volunteer for aircrew training duty involving flight.
2. Must possess the qualities of personal integrity, maturity, judgment, and initiative that are vital to the satisfactory performance of assigned tasks.
3. Must meet the physical and psychological requirements of the medical department (listed in the General Flight and Operating Instructions for Naval Aircraft, OPNAVINST 3710.7 series).
4. A permanent NATOPS Flight Personnel Training/Qualification Jacket shall be established and maintained to reflect previous designations and completion of current qualifications and requirements.

5.4.3.5.2 Requirements

1. Must complete the applicable training syllabuses for designation.
2. Must have a current flight physical.
3. Must be designated in writing by the commanding officer.
4. Must satisfactorily complete a NATOPS open book exam, closed book exam, and a NATOPS flight evaluation check ride with a qualified and designated NATOPS evaluator for model aircraft.

5.4.3.5.3 Designation

Commanding officers will designate aircrewmen and issue certification thereto. This certificate shall state the model helicopter and modifications thereof in which he is qualified. Necessary record entries will be made in accordance with current directives in the NATOPS Training and Qualification Jacket and Service Record.

5.4.3.5.4 Current Requirements

The minimum requirements to remain current as an aircrewman in the helicopter will be to have performed the duties of an aircrewman as outlined in this manual within the last six months and to have a current NATOPS flight evaluation. If the aircrewman has not functioned as an aircrewman during the preceding six–month period, the crewman shall be required to satisfactorily complete a NATOPS flight evaluation to regain currency.

5.4.3.5.5 NATOPS Flight Evaluation

On assignment to another unit, an aircrewman will not be required to receive a NATOPS flight evaluation if the NATOPS Training and Qualification Jacket indicates successful completion within the preceding 12 months.

5.4.3.5.6 Waiver

Unit commanders are authorized to waiver, in writing, minimum flight and/or training requirements where recent experience in similar model helicopter warrants.

5.4.3.5.7 Personal Flying Equipment

In the interest of safety and survival, aircrewman shall wear flying equipment as required by Part II of this manual (in accordance with OPNAVINST 3710.7).

5.4.3.5.8 Ground Training

The aircrewman ground training will cover the following subjects: aircraft systems, NATOPS inspections, ground safety, emergency procedures, etc., and is probably the most important single portion of preliminary training for a prospective aircrewman.

5.4.3.5.9 Publications and Related Directives

The aircrewman shall be instructed in the content and use of necessary publications and related directives as part of his professional training program.

5.4.3.5.10 Survival and First Aid

Aircrewman will be instructed in land and water survival techniques with particular emphasis on proper use of personal survival gear and operation of all items of survival equipment normally carried in the helicopter. Provisions will also be made for training in first aid techniques by the flight surgeon or other qualified personnel.

5.4.3.5.11 Communications Procedures

In the operation of the helicopter radios, navigation equipment (when applicable), and ICS; understand procedures to be followed in the event of lost communications with the pilot; and know the standard NATOPS voice communications for external cargo flights.

5.4.3.5.12 Safety

Demonstrate a thorough understanding of prescribed safety procedures in and around the helicopter during ground operations and in flight.

5.4.3.5.13 Ground Training Syllabus (Flight Line Training)

Aircrew training will include the following subjects:

1. Ground Handling.

   The aircrewman ground handling training will cover the following subjects: instruction in the operation, aircraft towing, and tiedown procedures (aircraft security) and the use of proper taxi director signals, both day and night.

2. Fueling and Servicing.

   Fueling and servicing training shall include instructions in the proper fueling and servicing procedures, with particular emphasis on safety precautions, fuel contamination, fuels, oil, lubricants, hydraulic contamination, servicing, alternate approved materials, fuels, etc.

3. Helicopter Inspection.

   Helicopter inspection training shall include instruction in the performance of all NATOPS required inspections on the aircraft, with further emphasis placed on proper documentation of aircraft discrepancies.

4. Flight Operations.

   The primary responsibility for briefing the crew rests with the pilot in command. This briefing should be conducted before the flight commences and should be in such detail as to allow a complete understanding of the mission. The pilot should give specific instruction where necessary to cover any special situation that may occur.

5. Helicopter Passenger Briefing.

   The aircraft commander will ensure, whenever possible, all passengers receive a passenger safety briefing prior to flight. The briefing will be given using the following format by the plane commander, copilot, or a qualified aircrewman:

   a. Follow all instructions of the aircrewman.

   b. Explain the proper use, fitting, and wearing of all flight and personal survival equipment.

   c. Explain the normal and emergency release systems on all exits.

   d. Proper adjustment, securing, and releasing of seat belts.

   e. Embarking and disembarking of the helicopter. Never approach the helicopter rotor. Never walk under the rotor system of an engaging or shutting–down helicopter (characterized by slow rotor rpm). Enter and exit helicopter rotor arc from the front of the aircraft under positive control of the pilot (thumbs–up indication).

   f. FOD hazards. Remove all loose objects prior to entering the flight line area.

   g. The use of tobacco products, both smokeless and smoke products (cigarettes, cigars, etc.), in naval aircraft is prohibited.

   h. Passenger conduct.

      (1) ICS procedures (if applicable).

      (2) Emergency procedures:

         (a) Fire on the ground.

         (b) Fire in flight.

         (c) Engine failure in flight.

         (d) Emergency landing.

         (e) Ditching.

5.4.4 Currency

5.4.4.1 Annual Flying and Currency Requirements

To ensure the skill of naval aviators is maintained at an acceptable standard of readiness for fleet operations, the annual flying requirements as set forth in OPNAVINST 3710.7 series shall be adhered to by all active duty naval aviators.

5.4.4.2 Waivers

Refer to current OPNAV 3710.7 for waivers.

5.5 PERSONAL FLYING EQUIPMENT

In the interest of safety and survival, flying equipment shall be worn by all personnel engaged in flights as set forth in the current OPNAVINST 3710.7 series. Protective visor shall be down whenever rotors are engaged.

5.5.1 All Flights

1. Protective helmet.
2. Flight safety boots.
3. Nomex gloves.
4. Nomex flight suit.
5. Identification tags.
6. Personal survival kit.
7. Signaling device for all night flights and for all flights over water or sparsely populated areas.

5.5.2 Extended Overwater Flights

1. Flotation survival equipment shall be worn.
2. HABD bottles will be carried anytime flotation gear is required. Personnel who are not HABD qualified will not carry the bottle and non–qualification will preclude overwater flight.
3. Crewmember's survival equipment shall include all required personal survival equipment per OPNAVINST 3710 series including inflatable life preservers, HABD (helicopter aircrew breathing device), an anti–exposure ensemble (as required), survival radio, signaling device, and hoisting harness.

5.5.3 Night and Instrument Flights

A flashlight shall be carried in the aircraft.

PART III

Normal Procedures

Chapter 6 — Flight Preparation

Chapter 7 — Shore-Based Procedures

Chapter 8 — Shipboard Procedures

Chapter 9 — Special Procedures

Chapter 10 — Functional Checkflight Procedures

CHAPTER 6

Flight Preparation

6.1 MISSION PLANNING

6.1.1 Introduction

Adequate and thorough planning of the flight is necessary to ensure the successful completion of any mission.

Mission planning has two requirements. The first requirement is for pilot and operation personnel to calculate normal and emergency helicopter operating capabilities concurrent with existing ambient conditions and mission requirements prior to every flight on a daily basis. The second requirement is preparation of planning documents fora future helicopter assault or support mission and is normally prepared from weather summaries and predicted weather in the area to be considered. Weather summaries suitable for preparation of such estimates can be prepared or obtained by any authorized weather facility with a forecasting capability.

6.1.2 Factors Affecting Helicopter Performance

The relationship of helicopter performance to atmospheric conditions is found in the performance charts in Figure 23-2.

6.1.2.1 Temperature

High free air temperature results in increased inlet air temperature, which has an adverse effect on power output of gas turbine engines. High FAT may result in the engine being TOT rather than transmission or N_g limited.

At a constant pressure altitude, a 10 °C increase in FAT will decrease engine output power available by approximately seven percent; therefore, helicopter performance could decrease because of high ambient temperature.

6.1.2.2 Humidity

The effect of humidity on gas turbine engines is negligible; however, since humidity does affect air density, a noticeable effect upon rotor system performance will occur. For each 10 percent increment of humidity, density altitude should be increased by 100 feet prior to calculation of any performance parameter.

Note

Density altitude, as computed from Figure 23-2, is not corrected for humidity.

6.1.2.3 Altitude

Altitude has a marked effect on the performance of all aircraft engines. Air density and temperature decrease as altitude increases. As air density decreases, the mass flow of air through the gas turbine decreases; however, the gas turbine operates more efficiently at the lower temperatures encountered at high altitudes. At altitude, the power output of gas turbine engines decreases as evidenced in the cockpit by a decrease in the torque pressure reading, and the specific fuel consumption (engine fuel consumption in gallons per hour divided by engine shaft horsepower) decreases because of increased engine efficiency. With the collective pitch control set, the N_f will begin to droop as higher altitudes are reached. Operating rpm can be reestablished by reducing the angle of attack of the blades (by decreasing collective).

6.1.2.4 Wind

Wind affects helicopter performance by producing translational lift; therefore, less power is required to hover into the wind than under no wind conditions or, using the same power, the helicopter can hover at higher gross weights by utilizing a headwind component. Helicopters operating from the decks of ships under way are in an excellent position to take advantage of the relative wind generated by the ship movement. The same is true when helicopter stake advantage of prevailing orographic winds at the top of a ridge line or crest. This increase in relative wind can be used to increase the performance of the helicopter in the same way that running takeoffs are utilized.

6.1.2.5 Ground Effect

For hovering flight closer than one–half rotor diameter to the Earth, the performance of a helicopter is increased by ground effect. Because the power required increases with an increase in height above the ground, the helicopter can hover at heavier gross weights in ground effect than out of ground effect.

6.1.3 Weight and Balance

(See Figure 6-1.) The TH–57 is classified as class 1B for weight and balance purposes. The responsibility for ensuring safe loading of class 1B aircraft prior to requesting clearance is assigned to the operating activity. The aircraft commander is responsible for computing the cg location and gross weight of his assigned helicopter and making sure the maximum allowable limits are not exceeded.

Note

Locally prepared computation cards may be utilized by operating activities to facilitate mission planning based upon operational requirements.

6.1.3.1 Internal Cargo

Internal cargo can be carried in the passenger compartment. The passenger seat cushions can be removed and approximately 40 cubic feet of cargo may be carried internally. The aft doors can be removed. The cargo density should not exceed 86 pounds per square foot and a maximum load of 950 pounds. A 16–cubic–foot baggage compartment is located beneath the engine compartment. The load density should not exceed 86 pounds per square foot in the baggage compartment. The maximum allowable load for the baggage compartment cannot exceed 170 pounds.

6.1.4 General Precautions

Special care will be exercised to avoid flying over populated areas, civilian airports, turkey and chicken farms, etc. In all cases, conformance with existing regulations is mandatory.

6.1.5 Fuel

Fuel requirements shall be planned in accordance with the current edition of OPNAVINST 3710.7. Fuel consumption may be minimized during cruise by proper selection of altitude, airspeed, operation of the heating and anti–ice system, and route of flight.

6.1.6 Briefing

The pilot is responsible for briefing the crew. This briefing shall ensure complete understanding of the mission. The pilot shall give specific instructions to cover special situations that may occur.

It shall be the responsibility of the pilot in command to ensure all passengers are adequately briefed before any flight as to the proper ditching and evacuation procedures in the TH–57, on land or water as applicable, and are instructed on the use of land and water survival equipment.

A briefing guide will be used. On training flights, the appropriate syllabus guide should be used. Each pilot will maintain a knee pad and record all flight numbers, call signs, and other data necessary to assume the lead successfully and complete the assigned mission. The briefing guide will include the following items.

CABIN AND BAGGAGE COMPARTMENT TABLE OF MOMENTS POUNDS			
Weight (Pounds)	Front Seat FS 65	Aft Pass FS 104	Baggage FS 148
40	26.00	41.60	59.20
50	32.50	52.00	74.00
60	39.00	62.40	88.80
70	45.50	72.80	103.60
80	52.00	83.20	118.40
90	58.50	93.60	133.20
100	65.00	104.00	148.00
110	71.60	114.40	162.80
120	78.00	124.80	177.60
130	84.60	136.20	192.40
140	91.00	146.60	207.20
150	97.50	156.00	222.00
160	104.00	166.40	236.80
170	110.50	176.80	251.60
180	117.00	187.20	266.40
190	123.50	197.60	281.20
200	130.00	208.00	296.00
210	136.50	218.40	310.80
220	143.00	228.80	325.60
230	149.50	239.20	340.40
240	156.00	249.60	355.20
250	162.50	260.00	370.00
260	189.00	270.40	
270	175.50	280.80	
280	182.00	291.20	
290	188.50	301.60	
300	195.00	312.00	
310	201.50	322.40	
320	208.00	332.80	
330	214.50	343.20	
340	221.00	353.60	
350	227.50	364.00	
360	234.00	374.40	
370	240.50	384.80	
380	247.00	395.20	
390	253.50	405.60	
400	260.00	416.00	

Figure 6-1. Loading (Sheet 1 of 2)

FUEL LOADING TABLE											
TYPE JP-8/JET A-1 GALLONS				TYPE JP-5 GALLONS				TYPE JP-4/JET B GALLONS			
Gal	Weight 6.7 Lbs/Gal	CG	Moment	Gal	Weight 6.8 Lbs/Gal	CG	Moment	Gal	Weight 6.5 Lbs/Gal	CG	Moment
5	33.5	110.3	3695	5	34.0	110.3	3750	5	32.5	110.3	3585
10	67.0	110.7	7417	10	68.0	110.7	7528	10	65.0	110.7	7196
15	100.5	110.8	11136	15	102.0	110.8	11302	15	97.5	110.8	10803
20	134.0	110.8	14847	20	136.0	110.8	15069	20	130.0	110.8	14404
25	167.5	110.8	18559	25	170.0	110.8	18836	25	162.5	110.8	18005
30	201.0	110.8	22271	30	204.0	110.8	22603	30	195.0	110.8	21606
35	234.5	110.9	25230	35	238.0	110.9	26394	35	227.5	110.9	25230
40	268.0	111.5	29882	40	272.0	111.5	30328	40	260.0	111.5	28990
45	301.5	112.8	34009	45	306.0	112.8	34517	45	292.5	112.8	32994
50	335.0	113.8	38123	50	340.0	113.8	38692	50	325.0	113.8	36985
55	368.5	114.6	42230	55	374.0	114.6	42860	55	357.5	114.6	40970
60	402.0	115.3	46351	60	408.0	115.3	47042	60	390.0	115.3	44967
65	435.5	115.9	50474	65	442.0	115.9	51228	65	422.5	115.9	48968
70	469.0	116.4	54592	70	476.0	116.4	55406	70	455.0	116.4	52962
75	502.5	116.9	58742	75	510.0	116.9	59619	75	487.5	116.9	56989
80	536.0	117.2	62819	80	544.0	117.2	63757	80	520.0	117.2	60944
85	569.5	117.6	66973	85	578.0	117.6	67973	85	552.5	117.6	64974
90	603.0	117.9	71094	90	612.0	117.9	72155	90	585.0	117.9	68972
91	609.7	118.0	71945	91	618.8	118.0	73018	91	591.5	118.0	69797

Figure 6-1. Loading (Sheet 2)

6.1.6.1 Conduct of Flight

1. Helicopter assignment and location.
2. Mission.
3. Sequence of events.
4. Operating and landing area.
5. Applicable preset frequencies/manual frequencies.
6. Navigation aids.
7. Flight duration.
8. Fuel planning.
9. Weight and balance completed.
10. Flight publications required.
11. Notice to Airmen (NOTAMS).

6.1.6.2 Weather

1. Current weather.
2. Destination/alternate weather (if applicable).

6.1.6.3 Emergencies

1. Actual.
2. Simulated.
3. Inadvertent IMC.
4. Ditching/emergency landing.
5. Emergency egress.

6.1.6.4 Special Instructions

1. Night flight/lighting.
2. Formation flight.
3. Shipboard operations.
4. Confined area landings.
5. External load operations.

6.1.6.5 Cockpit Crew Coordination

1. Flying pilot responsibilities.
2. Monitoring pilot responsibilities.
3. Control changes.
4. Lookout doctrine.
5. Training timeout.
6. Instrument/night flight (brief when appropriate).
   a. Safety of flight. The monitoring pilot will monitor performance instruments, question anything exceeding the following parameters, and be prepared to assume the controls:
      (1) Angle of bank in excess of 30°.
      (2) Rate of descent or climb exceeding 1,000 fpm (Feet per Minute).
      (3) Airspeed errors in excess of 10 KIAS.
      (4) Altitude errors in excess of 100 feet.
      (5) Heading errors in excess of 10°.
      (6) Vertigo/disorientation.
   b. During approaches, the monitoring pilot shall:
      (1) Follow progress of the approach on his/her approach plate.
      (2) Assist with timing as required.

(3) Maintain a lookout for the runway/runway environment:

(a) With the required references in sight, report “runway in sight” or “approach lights in sight, clock positions”, or other callouts, as applicable.

(b) When the flying pilot states “missed approach point”, if the required references are not in sight, report “no runway, execute missed approach”.

(c) Control (will or will not) be transferred and until landing is assured, the monitoring pilot shall maintain an instrument scan.

c. During missed approaches, the monitoring pilot shall read missed approach instructions and assist the flying pilot as directed.

6.1.6.6 Observer Brief (Brief When Observer Does Not Attend Full NATOPS Brief)

1. Mission.

   a. Primary/secondary.

   b. Operating area.

   c. Sequence of events.

2. Lookout doctrine.

   a. Responsibilities.

   b. Traffic.

   c. Clearing aircraft.

3. Communications/ICS.

   a. Normal.

   b. Lost ICS.

4. Emergencies.

   a. Aircraft emergencies.

   b. Downed pilot/aircraft.

   c. Crewmember casualty.

5. Safety of flight.

   a. Waveoff.

   b. Question anything.

6.1.7 Debriefing

A proper debriefing conducted under tactical or training conditions can be, in many instances, the most important part of a flight. All mistakes can be discussed in an atmosphere free from distractions.

CHAPTER 7

Shore–Based Procedures

7.1 INTRODUCTION

Shore–based procedures are discussed in this chapter to cover as many operational situations as possible.

7.2 SCHEDULING

The commanding officer or his designated representative is responsible for the promulgation of the flight schedule when based ashore. The flight schedule, when published, becomes an order of the commanding officer. The flight schedule will contain sufficient information to ensure all preparations relative to flight can be accomplished in a smooth and timely manner. The minimum essential items that shall be included on the flight schedule are found in OPNAVINST 3710.7.

7.3 GROUND OPERATIONS

7.3.1 Preflight Inspection

Prior to flight, the aircrew shall conduct a complete visual check of the helicopter.

7.3.2 Fireguard

Prior to starting the engine, a qualified fireguard should be stationed near the engine and remain in readiness with a fire bottle until the engine is operating.

WARNING

- The fireguard shall remain clear of the exhaust and compressor blade area.
- Ear protection and goggles that provide adequate peripheral vision shall be worn by flight line personnel.

7.3.3 Helicopter Acceptance

The pilot in command should not accept the helicopter for flight until he is assured the helicopter is satisfactory for safe flight and accomplishment of the assigned mission. The two major steps to be taken prior to acceptance of the helicopter are a careful examination of the recent helicopter discrepancies and a thorough preflight inspection.

7.3.3.1 Acceptance Sheets

At a minimum, the discrepancies from the last 10 flights shall be made available to the pilot for his examination in accordance with OPNAVINST 4790.2 series. Any additional discrepancies should also be brought to the pilot's attention.

1. The pilot shall ensure the plane captain has conducted a standard daily preflight as set forth in the NAVAIR 01–110HCC–6 series and signed the acceptance sheet prior to each flight. When satisfied with the acceptance sheet information, the pilot will then sign the applicable portion.

7.3.3.2 Hot Seating Procedures

If a crew change is required while the engine is running, the requirement for a preflight in accordance with paragraph 7.6 by the relieving crew is waived. The relieving crew shall inspect the helicopter as possible under existing conditions. Additionally, the crew being relieved shall thoroughly brief the oncoming crew on all aspects of the helicopter that could influence the conduct of the flight.

7.4 DISCREPANCY REPORTING

Immediately following each flight, the pilot shall complete all items on the yellow sheet in accordance with OPNAVINST 3760.8 series, noting all discrepancies in detail. To aid in discrepancy analysis, specific information such as position of controls, movement of controls and results, instrument readings, etc. should be recorded inflight, if practical, to be included on the yellow–sheet. Maintenance troubleshooters should be available for consultation. The pilot will ensure he has conveyed his complete knowledge of the discrepancy orally and in writing.

7.5 EXTERIOR INSPECTION

Figure 7-1 represents minimum preflight inspection for all flights. See Figure 7-2 for TH–57 helicopter component locations.

7.6 PREFLIGHT INSPECTION

7.6.1 Aircraft

1. Aircraft — Check general condition.
2. Battery and battery compartment — Connections, mounting, vent lines, hour meter circuit breaker.

7.6.2 Cockpit

1. All switches — Off.
2. Twist grip — Check and closed (check full travel, no binding, idle detent).
3. All circuit breakers — In.

(C) 4. Voltmeter select switch — MAIN BAT.

5. BAT switch — ON. Check minimum 22 Vdc. If performing a battery start, check minimum 22 Vdc, if voltage is less than 22 Vdc, plan for GPU assisted start; if battery voltage is less than 18 Vdc, maintenance action is required.

6. Torque and TOT gauges — Check the digital displays to ensure no limits have been exceeded.

(C) 7. STBY ATT IND switch — ON.

8. CAUTION lights — Check. The following caution lights will illuminate: HYDRAULIC PRESSURE, MAIN GEN FAILURE, ROTOR LOW RPM, TRANS OIL PRESS, and ENG OUT. Additionally, the TH–57C will have the STBY GEN FAIL light illuminated.

9. Fuel quantity gauge — Note fuel quantity.

10. AIRFRAME FUEL FILTER Button — Test. Check A/F FUEL FILTER caution light illuminated.

(C) 11. Voltmeter select switch — STBY BATT.

12. BAT switch — OFF after standby attitude indicator off flag disappears.

(C) 13. CHECK STBY BATT ON caution light is illuminated and STANDBY BATTERY voltage is a minimum of 20 Vdc.

Note

If STBY BAT voltage is less than 20 Vdc, aircraft is down for flight in IMC.

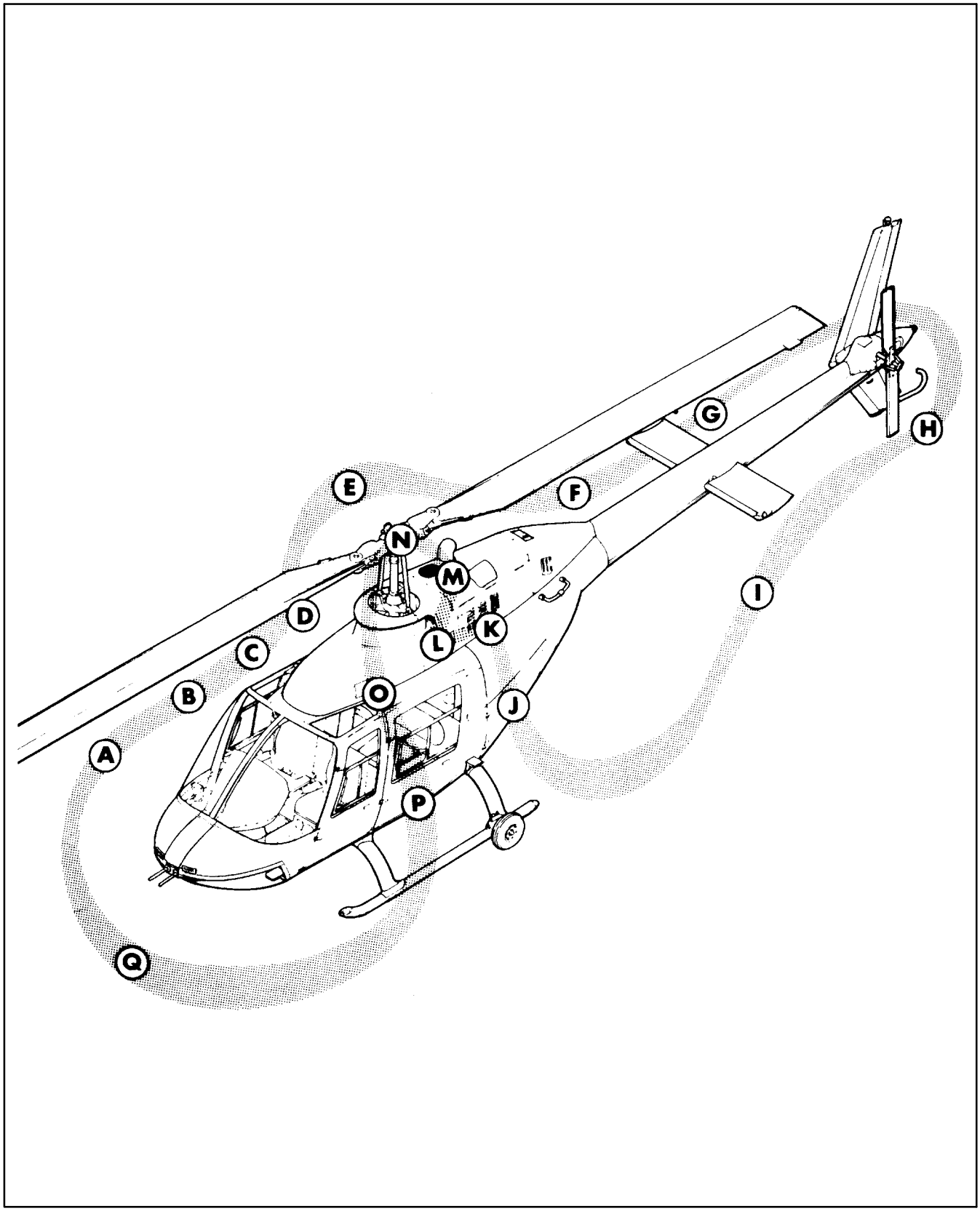

Figure 7-1. Preflight Sequence

1. Main rotor
2. Air intake grill
3. Engine compartment
4. Vertical fin
5. Tail skid
6. Tail rotor
7. Horizontal stabilizer
8. Tailboom
9. Skid gear
10. Ground handling wheel
11. Passenger – cargo doors
12. Crew doors
13. Forward section
14. Aft fuselage
15. Baggage compartment

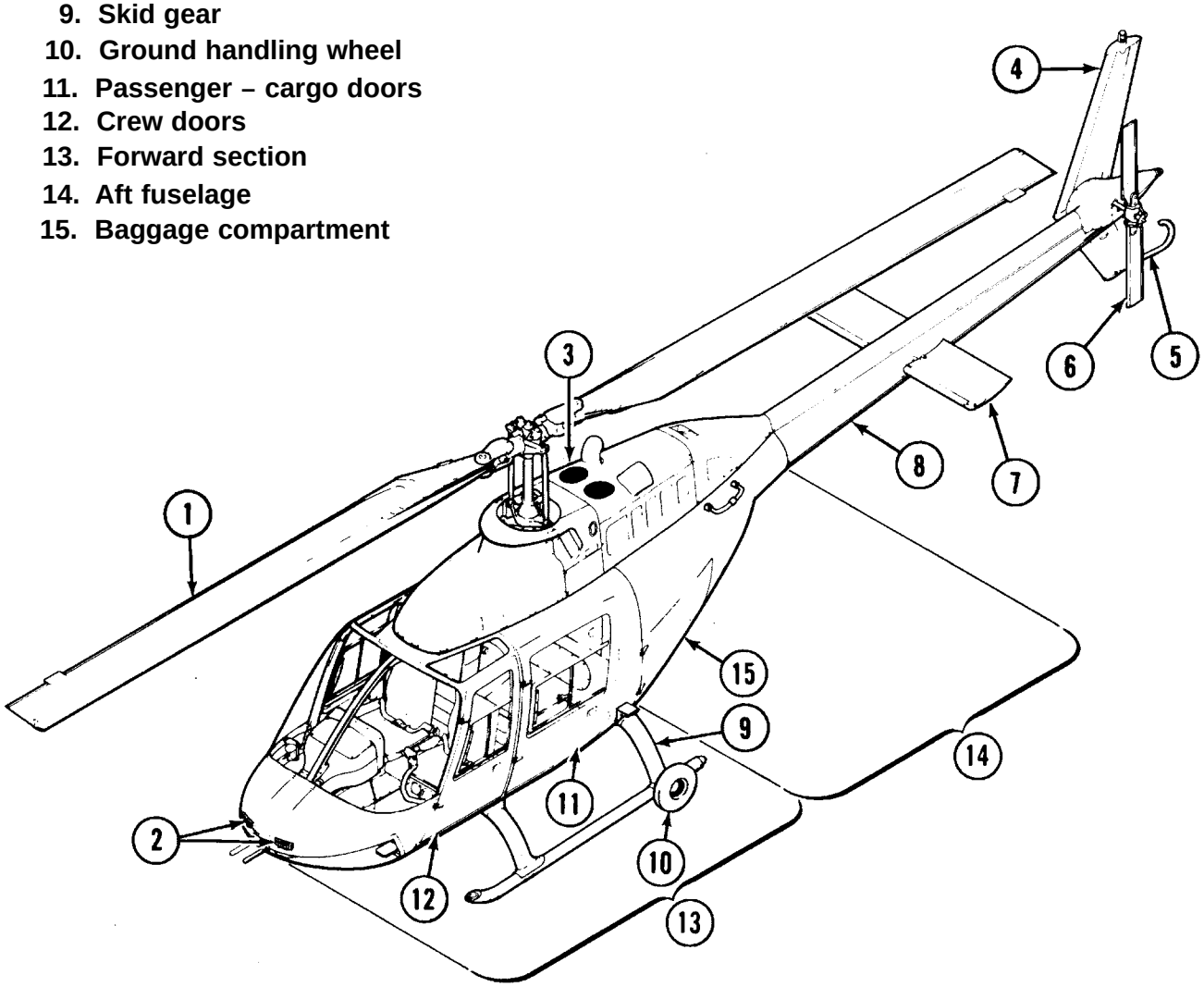

Figure 7-2. Helicopter Components (Sheet 1 of 2)

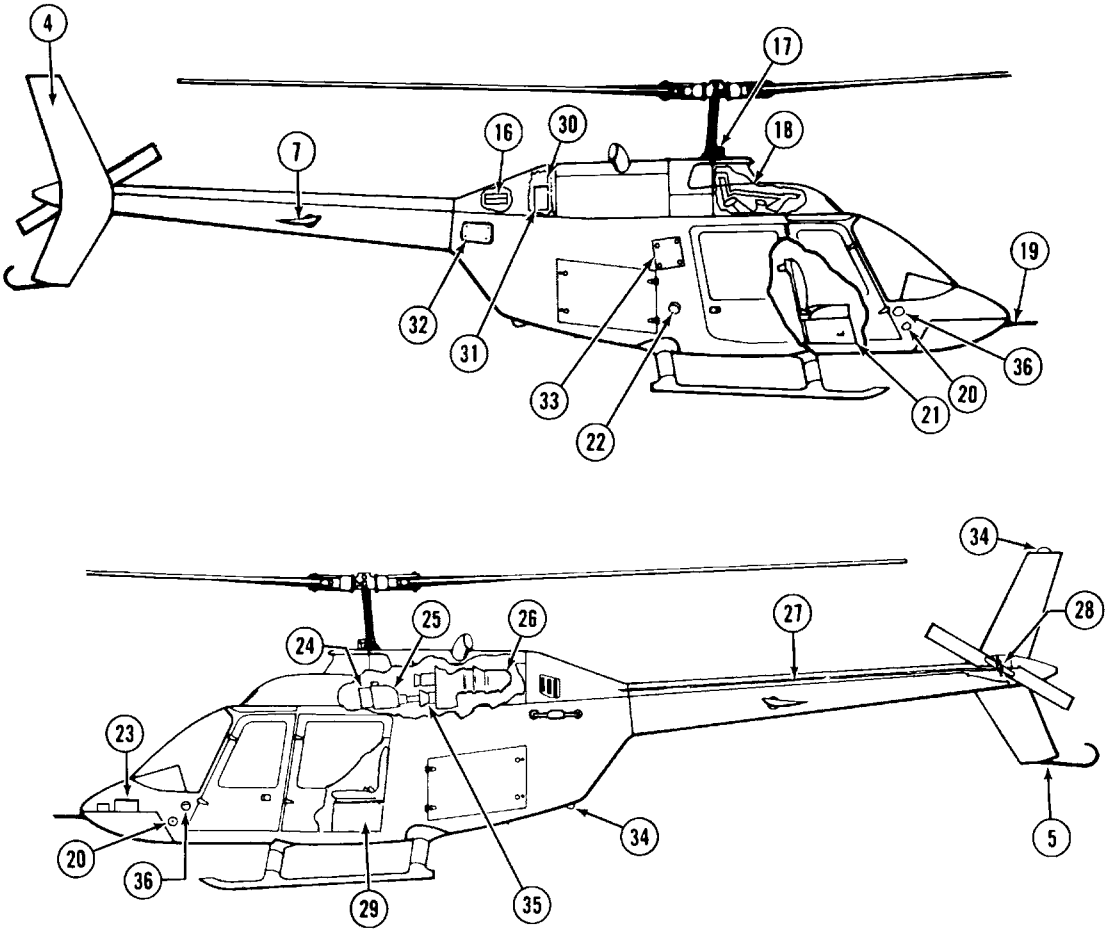

16. Oil tank – engine
17. Swashplate drive link
18. Cyclic and collective servo actuators
19. Pitot tube
20. Static Port – pilot
21. Pilot's station
22. Fuel tank filter
23. Battery
24. Hydraulic pump and reservoir
25. Transmission assembly
26. Engine
27. Tail rotor driveshaft
28. Tail rotor gearbox
29. Passenger station
30. Oil cooler (engine)
31. Oil cooler blower
32. Tailboom attachment access panel
33. Fuel shutoff valve access panel
34. Anticollision beacon (2)
35. Freewheeling unit
36. Static port – co-pilot

Figure 7-2. Helicopter Components (Sheet 2)

(C) 14. STBY ATT IND switch — OFF.

15. Fire extinguisher — Check (current, sealed, and secured).

16. First–aid kit — Check (current, sealed, and secured).

17. Seatbelts and harnesses — Condition and security.

18. Cockpit — Free of loose gear.

WARNING

Prior to flight with the doors removed, ensure all loose items including seat belts are either secured or removed from the cockpit/passenger compartment. Panels which are secured by Velcro fasteners shall be removed prior to flight with the doors off.

19. Right pedal — Full forward (to expose tail rotor output shaft).

20. Compass deviation card — Present and current.

21. Cockpit doors (hinges, jettison handle, and mechanism) — Condition and security.

7.6.3 Forward Fuselage (Right Side)

1. Right static port(s) — Condition/clear.
2. Lower antennas — Condition and security.
3. Cabin doors (hinges, jettison handle, and mechanism) — Condition and security.
4. Cabin — Free of loose gear.
5. Landing gear and rubber bumpers — Condition.
6. Tiedown clevis — Security and safety wired.
7. Ground handling wheels — Removed.

7.6.4 Upper Forward Cowling Access Door (Right Side)

(C) 1. Rotor brake master cylinder filler cap — Secured.

2. Hydraulic control servo actuators — Leakage and security.
3. Control tube actuator assemblies — Condition and security.
4. Hydraulic fluid sight gauge — Full (BB at top).
5. Hydraulic filter — Leakage and position of WARNING Button (visible red button indicates a clogged filter).

7.6.5 Transmission Access Door (Right Side)

1. Transmission — Condition and leakage.
2. Pylon support mount — Check personnel clear. Condition and security.
3. Transmission oil sight gauge — Check for visible oil level (oil level on the first flight of the day is at or below the center bull’s eye; an air bubble must be visible on subsequent hops).

4. Chip detector and magnetic drain plug — Leakage and security.
5. Transmission spike and well area — Condition (sheared rivets, etc.).
6. Transmission dual focal mount — Condition and security.
7. Four studs inside the forward section of the main driveshaft — Security of locknuts.
8. Oil cooler air duct — Condition and security.

7.6.6 Engine Compartment (Right Side)

1. Engine inlet cover — Removed.
2. Right side intake duct — Free of obstruction/FOD.
3. Engine exhaust stack cover — Removed.
4. Exhaust stack — Condition and security (cracks, dents, burned spots).
5. Exhaust clamps — Security and safety wired.
6. Airframe fuel filter — Check.
7. Scroll, air transfer tube, combustion area — Cracks and security.
8. Fire detector element — Condition and security.
9. Engine mount — Security.
10. Right side of engine — Condition and leakage.

(C) 11. Rotor brake — Condition and security.

12. Scavenge oil outlet chip detector — Condition and security.
13. Freewheeling unit magnetic drain plug — Leakage and security.
14. Accessory gearbox chip detector — Leakage and security.
15. Twist grip control linkage — Condition and security.
16. Fuel control — Condition and security.
17. Fuel lever stop arm — Making contact with minimum speed stop.
18. Starter/generator — Condition and security.
19. Generator cooling air duct — Condition and security.
20. Fuel, oil, Environmental Control System (ECS) lines, and electrical connection — Condition and security.

7.6.7 Aft Fuselage (Right Side)

1. Fuel cap — Security.
2. Drain holes and vent lines — Free of obstructions.
3. RAD ALT antennas (two) — Condition and security.
4. Tiedown clevis — Security and safety wired.
5. Lower anticollision light — Condition and security.

6. VHF antenna — Condition and security.
7. VOR/NAV antenna — Condition and security.
8. Engine oil tank — Check oil level.
9. Oil filler cap — Security.

7.6.8 Tailboom (Right Side)

1. Tailboom attach point — Condition and security.
2. Tail rotor driveshaft cover — Security (DZUS fasteners at 45°, last fastener aft is vertical).
3. Stabilizer attach point — Security of attaching bolts. Check angle arm not contacting stabilizer.
4. Horizontal stabilizer — Condition (dents, cracks, loose rivets) drain holes.
5. Right position light — Condition and security.
6. Main rotor tiedown lanyard — Remove and properly stow.
7. Vertical fin — Condition (dents, cracks, and loose rivets).
8. Upper anticollision light — Condition and security.
9. Tail skid — Security.
10. Tail position light — Condition and security.
11. Tail rotor gearbox fairing — Condition and security.

7.6.9 Tail Rotor

1. Tail rotor oil level — Check oil level 1/8 inch above the line in the sight gauge, oil cap installed.
2. Chip detector — Security.
3. Crosshead retaining nut — Security.
4. Pitch change links — Security.
5. Pitch change shaft — Condition.
6. Knurled nut and balancing wheel — Security and safety wired.
7. Output shaft hub nut and washer — Security and safety washer should be bent outboard over two flats of the nut and one flat inboard over the static stop.
8. Rubber bumper between yoke and static stop — Deterioration.
9. Inboard end of pitch change links — Condition.
10. Trunnion grease fitting — Security and safety wired.
11. Flapping movement of tail rotor — Freedom of movement.

12. Tail rotor pitch change horns — Security and safety wired.
13. Tail rotor bolts, nuts, spherical bearings, and balancing washers — Condition and security.
14. Tail rotor blades — Condition, dents, and cracks.
15. Tail rotor blade balance screws — Security.
16. Tail rotor output shaft — Condition of shaft and leakage around garlock seal.

7.6.10 Tailboom (Left Side)

1. Tail rotor driveshaft cover — Security (DZUS fasteners at 45°, last fastener aft is vertical).
2. Stabilizer attach point — Security of attaching bolts. Check angle arm not contacting stabilizer.
3. Horizontal stabilizer — Condition (dents, cracks, loose rivets) drain holes.
4. Left position light — Condition and security.
5. Tailboom attach points — Condition and security.

7.6.11 Aft Fuselage (Left Side)

1. Engine oil tank sight gauge — Level.
2. Scavenge oil filter impending bypass indicator — Not extended.
3. Driveshaft safety pin — Freedom of movement.
4. VOR/NAV antenna — Condition and security.
5. Baggage compartment — Gear adrift, condition, leaks.

(C) 6. Standby battery circuit breaker — In.

7. Baggage compartment door — Security.

7.6.12 Engine Compartment (Left Side)

1. Engine inlet cover — Removed.
2. Left side intake duct — Free of obstruction/FOD.
3. Engine exhaust stack cover — Removed.
4. Exhaust stack — Condition and security (cracks, dents, burned spots).
5. Exhaust clamps — Security and safety wired.
6. Fire detector element — Condition and security.
7. Anti–ice actuator arm — Forward (OFF position).
8. Diffuser vent standpipe — Oil leakage and security.
9. Scroll, air transfer tube, combustion area — Cracks and security.
10. Igniter — Condition and security.
11. Combustor drain — Security and leakage.

12. Fuel line and nozzle — Condition and leakage.
13. Thomas couplings, tail rotor driveshaft — Condition and security.
14. ECS compressor/drivebelt — Condition and security.
15. Heat shield drain — Fuel or oil leakage.
16. Accumulators — Cracks and security.
17. N_f governor — Condition and security.
18. (C) Standby generator — Condition and security.
19. Engine fuel pump, filter, and drain — Condition and security.
20. Start counter — Condition and security.
21. Fuel, oil, ECS lines, and electrical connections — Condition and security.
22. Engine mounts — Security.
23. Linear actuator and mount — Security.
24. Kaflex driveshaft — Condition, security, and slip markings.

7.6.13 Transmission Access Door (Left Side)

1. Transmission oil cooler — Leakage and free of obstruction.
2. Transmission oil filter — Leakage.
3. Left side of transmission — Condition and leakage.
4. Pylon support mount — Check personnel clear. Condition and security.
5. Kaflex driveshaft — Condition, security, and slip markings.

7.6.14 Upper Fuselage Area

CAUTION

Walking on aircraft roof may damage the airframe. Stand only on the black nonskid area.

1. Engine oil cooler radiator — Free of obstructions.
2. Exhaust stacks — Cracks, dents, burned spots.
3. Upper fairing and cowling — Condition and security.
4. (C) GPS antenna — Condition and security.
5. Transmission compartment — FOD, security.
6. Cooling air ducts and fittings — Security.
7. Hydraulic filler cap — Security.
8. Transmission oil filler cap — Security.
9. Control rod ends — Security.

7.6.15 Rotor System

1. Swashplate and lower end of pitch change control rods — Security.
2. Collective boot — Security and safety wired bottom, safety clamped top.
3. Drivelink, lever, collar set — Security.
4. Mast — Condition (nicks, cracks, etc.).
5. Static stops — Condition and security.
6. Inside of hub assembly — Condition and security. Check end of tension–torsion straps.
7. Control rods to the pitch horns — Security.
8. Flap restraint assembly — Condition and security.
9. Mast nut and locking device — Security.
10. Pillow block and blade grip reservoirs — Condition and excessive grease around seals.
11. Blade grip assembly — Security.
12. Blade latch nut — Security.
13. Blade retention bolt and nut — Condition and security; plastic cap on top of bolt.
14. Main rotor blades — Check personnel clear. Condition; position blades at 90/270 degree position. Turn blades in a clockwise rotation from the hub.

CAUTION

When rotating main blades from the hub, if blades will not turn or resistance is felt, discontinue. Do not force the rotation and proceed with applicable maintenance directives. Forcing the rotation may damage the N_f turbine.

7.6.16 Upper Forward Cowling Access Door (Left Side)

1. Hydraulic control servo actuators — Leakage and security.
2. Control tube actuator assemblies — Condition and security.
3. GPS antenna — Proper connection and security.

7.6.17 Forward Fuselage (Left Side)

1. Cabin doors, hinges, jettison handle, and mechanism — Condition and security.
2. Landing gear — Condition.
3. Tiedown clevis — Security and safety wired.
4. Ground handling wheels — Removed.
5. Cargo release cable and hook assembly — Condition and security.
6. Landing light — Condition and security.
7. Antennas (5); transponder (C model only), UHF, ADF, DME/TACAN, marker beacon — Condition and security.

8. Cockpit door jettison handle and mechanism — Condition and security.
9. Left static port(s) — Condition/clear.
10. Fuselage underside — Condition and leakage.

7.6.18 Fuselage (Front Section)

1. Free–air temperature bulb — Security.
2. Windshields — Cleanliness, condition.
3. Battery compartment access door — Condition and security.
4. Pitot tubes — Cover removed/unobstructed.
5. External power receptacle and door — Condition and security.
6. Ram air vent — Free of obstructions.
7. Searchlight — Cleanliness and security.
8. Landing light — Cleanliness and security.
9. Battery vent drains — Free of obstructions.
10. Instrument panel console vent screen — Free of obstructions.
11. Chin bubbles, pedals — FOD, condition and security.

7.7 PRESTART

1. Pedals — Adjusted.

Note

The pedal adjusters should not be set full aft as the pedal force trim switch will disengage the yaw force trim and the AFCS yaw axis (TH–57C).

2. Seatbelt and inertial lock — Check, fastened, and adjusted.
3. Flight controls — Free and coupled. Check freedom of movement of pedals, cyclic, and collective. If the controls are properly rigged, up collective will induce forward cyclic. Neutralize the cyclic and pedals and place the collective full down.
4. Searchlight — OFF.
5. Lower circuit breakers — In.

(C) 6. Lower AVIONICS MASTER switch — OFF.

(B) 7. Avionics — OFF.

(C) 8. Voltmeter select switch — MAIN BAT.

9. ENG ANTI–ICING — OFF.
10. HYD SYSTEM — ON.

(C) 11. NORMAL/RECOVER switch — Normal/recover.

12. Instruments — Static check. All gauges zero. Clock wound, correct time, OAT _____.

13. Radar altimeter(s) — Set.
14. ECS — OFF.
15. Overhead switches — Off.
16. Overhead circuit breakers — In.
17. INST LT — ON/OFF.

(C) 18. Upper AVIONICS MASTER switch — OFF.

19. Cabin heat valve — OFF.
20. Cockpit lights — ON/OFF.

(C) 21. Rotor brake lever — Stowed.

22. ANTI COLL LT — ON/OFF.

CAUTION

Because of the adverse effect of the anticollision lights on ground personnel and taxiing aircraft during night operations, the anticollision lights shall not be turned on except on preflight/postflight inspections at night. The anticollision lights shall be turned on/off upon crossing the holdshort line prior to takeoff and upon returning from flight (night operations only).

23. POS LT — Flashing ON/OFF.

Note

For night operations, place POS LT switch to POS LT/FLASH/BRIGHT.

24. Helmets — On.
25. BATTERY/GPU/Battery Cart — ON, _____VOLTS.
26. ICS — Check.

(C) a. NORM/EMERG switch — NORM.

b. INT VOL knobs — As desired.

c. Headphone audio select buttons — As desired.

d. Microphone selector switches — As desired.

27. AUD/MUTE switch — AUD, then MUTE.
28. FIRE DET TEST — Test.
29. CAUTION LT TEST — Five/six (C) normal, full panel, continuity check.

CAUTION

The CLEAR CHIP button will be illuminated if the circuit continuity check system has been recycled during the caution light test step. Depression of the CLEAR CHIP button if illuminated under these circumstances may result in damage to the circuit continuity check system.

Note

- The following caution lights should be illuminated at this point: HYDRAULIC PRESSURE, MAIN GEN FAILURE, ROTOR LOW RPM, ENG OUT, and TRANS OIL PRESS. Additionally, the TH–57C will have the STBY GEN FAIL light illuminated.
- Activation of the caution panel test switch for 2 seconds or longer will recycle the circuit continuity check, illuminating all three chip detector caution lights and the CLEAR CHIP button for approximately 5 seconds, confirming the electrical continuity of these devices.

30. FUEL QUANTITY — Check.

7.8 WASH

As required, otherwise proceed to next check.

CAUTION

Do not wash at or below 5 °C.

1. IGN ENG circuit breaker — Pull.
2. Signal plane captain to begin water stream into engine inlet.
3. STARTER — Engage, maximum of 10 percent N_g.
4. STARTER — Release.
5. IGN ENG circuit breaker — In.

Note

Prior to all non–pilot maintenance ground turns, ensure aircraft tiedowns are installed and secure.

7.9 START

1. Force trim — ON.
2. Twist grip — Closed.
3. Fuel valve — ON (fuel pressure is in the green).
4. BAT switch — ON (OFF for battery cart start).
5. Rotors — Check, blade is clear right/left. Verify main rotor tiedown removed and properly stowed.
6. Fireguard — Set.
7. Engine start — Complete.
   a. Tell me if the rotors are not turning by 25 percent N_g, starting on the _____ .
   b. Starter ON, _____ Volts.

CAUTION

If battery voltage stabilizes below 17 volts, a hot start is imminent; secure starter and utilize GPU for subsequent start.

(C) c. Battery relay caution light — On (off during battery cart start).

CAUTION

When performing battery (or GPU with battery on) starts, do not open the twist grip if the battery relay light is not illuminated. Failure of the battery relay light to illuminate indicates battery override circuitry has failed and opening the twist grip may result in engine damage.

d. Engine oil pressure rising.

e. TOT is less than 150 °C.

f. Twist grip — Flight idle at a minimum of 12 percent N_g.

g. Light–off — Monitor TOT.

h. Transmission pressure — Rising.

CAUTION

- If TOT rises rapidly through 840 °C, execute ABORT START procedure to preclude a HOT START.
- Abort start if rotors have not begun to turn by 25 percent N_g or if positive transmission oil pressure indication is not received by 30 percent N_r.

i. Starter — OFF at 58 percent N_g.

Note

A hung start is indicated by N_g not accelerating normally or stabilizing at a low setting. If suspected, abort the start before exceeding starter limits.

(C) j. Battery relay light — Check off.

CAUTION

- In the Bendix fuel system, condensation and freezing of moisture in the pneumatic circuits can occur when weather conditions of low temperature and high relative humidity are encountered. This condition can cause spontaneous acceleration (autoacceleration) of the engine.
- If the surface is slippery, care must be taken to avoid skidding by the aircraft if autoacceleration occurs.
- To prevent icing/autoacceleration, make a 10–minute ground warmup run at IDLE before flight. This warmup is recommended when the aircraft has been allowed to cold soak (remain out of hangar overnight) in low ambient temperature of –12 °C (+10 °F) or below and high relative humidity of 45 percent or greater.
- If autoacceleration occurs, close the throttle and shut down the engine. Subsequently, restart the engine and resume the warmup.

Note

If battery relay light does not extinguish, the battery protective circuit has malfunctioned. With this failure, IFR flight is prohibited.

8. ENG/XMSN oil pressures — Check. Engine oil pressure in the green and transmission oil pressure normal for this phase.

Note

Engine oil pressure fluctuations of 3 to 5 psi at idle are normal; however, fluctuations must remain within normal operational range.

9. POS LT — Steady ON/OFF.

Note

During cold–weather operations, temporary conditions of 150 psi maximum engine oil pressure and/or 70 psi maximum transmission oil pressure are allowable following an engine start.

10. BAT switch — ON for battery cart start.
11. GPU/Battery cart — Remove.
12. AUD/MUTE switch — AUD.
13. Instruments — Check.
14. Caution panel — Check for normal caution lights.

Note

At this stage, only the MAIN GEN FAILURE and ROTOR LOW RPM caution lights should be illuminated. Additionally, the TH–57C will have the STBY GEN FAIL light illuminated.

7.10 PRETAKEOFF

Steps marked by a dagger (†) need not be completed on subsequent starts by the same crew.

CAUTION

Do not accelerate engine above flight idle until transmission oil temperature is at least 15 °C, transmission oil pressure is 50 psi or below, and engine oil pressure is below 130 psi.

1. Twist grip — 70 percent N_g.

(C) 2. Voltmeter select switch — MAIN GEN.

3. MAIN GEN switch — Reset, then ON, generator light out and rise in volts and load.

(C) 4. STBY GEN switch — ON, light out.

(C) 5. STBY ATT IND switch — ON, gyro caging.

(C) 6. AVIONICS MASTER switches — On.

7. Avionics — On.
8. Loadmeter — Check below 50 percent.
9. ECS — ON/OFF/Fan.

CAUTION

Do not engage if loadmeter indicates greater than 50 percent load.

10. Flight controls — Check.

Note

If abnormal forces, unequal forces, control binding, or motoring are encountered, maintenance action is required.

a. Aircraft clear right/left.

WARNING

When performing the checks below, at no time shall the controls be left unattended.

b. Force trim check.

(1) Cyclic FT button — Depress. Check for cyclic freedom of movement by moving cyclic in an "X" pattern.

(2) Cyclic FT button — Release. Move the cyclic fore and aft and side to side in a "+" pattern, checking for proper tip–path deflection and cyclic returns to original trimmed position.

WARNING

Do not displace the cyclic so much as to contact the static stops.

(C) (3) Yaw check — Apply pressure to both pedals and displace left pedal approximately 2 inches forward, then release. Attempt to neutralize pedals by pulling on left pedal only, then release. Note pedals return to trimmed position.

c. FORCE TRIM — OFF. Check for freedom of movement of cyclic and pedals.

(1) Collective check. Raise collective and note low N_r and audio horn activates. Return collective to full down position.

d. HYDRAULIC BOOST — OFF, light ON. Check for freedom of control movement by moving cyclic in an "X" pattern. Raise the collective approximately 1 to 2 inches and return it to the full down position.

e. HYDRAULIC BOOST — ON, light OFF.

f. FORCE TRIM — ON. Control check complete.

(C) 11. Servo indicators — Centered.

(C)†12. AFCS controller test — Complete.

a. TEST button — Press.

(1) TEST 1 light — Amber.

(2) STAB light — Green.

(3) FT light — Green.

(4) ALT light — Green.

(5) ALT warning light — Amber.

(6) FCS caution light — ON.

b. TEST button — Press.

(1) TEST 2 light — Amber.

(2) STAB button — Press and check green.

(3) ALT button — Press and check green. Check green light out and ALT warning light blinking amber after approximately 0.5 second, then out within 8 to 12 seconds.

c. TEST button — Press. Check test number no longer illuminated.

d. Cyclic FCS button — Test. Check both cyclics capable of engaging/disengaging AFCS STAB. After checks, disengage STAB.

Note

The STAB function should not be left engaged during prolonged periods while the aircraft is on the deck. This may cause the servo to overheat.

13. ENGINE ANTI-ICING — Check as required.

a. OAT 10 °C or higher — Not required.

b. OAT less than 10 °C — Anti-ice On, rise in TOT. Anti-ice Off, decrease in TOT.

Note

When the engine is “washed,” ENG ANTI-ICING should remain on for 5 minutes for maximum drying.

14. PITOT HEAT — Check as required.

a. OAT 10 degrees or higher — Not required.

b. OAT less than 10 degrees — Pitot heat On, rise in loadmeter. Pitot heat Off, decrease in loadmeter (Left followed by Right in (C)).

†15. Cargo Hook — Check as required.

a. CARGO HOOK cont cb — Check in.

b. Pilot Cyclic Release switch — Depress, aircrew checks for release.

c. Copilot Cyclic Release switch — Depress, aircrew checks for release.

d. Emergency T-Handle — Pull, aircrew checks for release.

e. Cargo Hook Manual Release Knob — Twist, check for release.

†16. Twist grip — Full open.

a. Gauges and caution lights normal.

b. Signal to plane captain.

c. Twist grip full open, not to exceed 40 percent torque.

d. N_f/N_r — 100 percent.

CAUTION

When accelerating the rotor system during the initial rotor engagement or after power off maneuvers, exceeding 40 percent torque may induce engine chugging which may induce a compressor stall.

†17. Deceleration and Flight Idle — Check.

a. Left Twist Grip — Flight Idle (Note N_g deceleration time from 100 percent N_r to 65 percent N_g).

b. Check N_g stabilized 59 to 65 percent N_g.

Note

- Deceleration should be smooth throughout range. If deceleration time is less than 2 seconds, maintenance action is required prior to flight.
- No maximum time is prescribed; however, an upper limit of 10 to 15 seconds is suggested before additional maintenance trouble-shooting is required.

(C)†18. Voltmeter select switch — Check.

a. MAIN BAT — ±0.5 Vdc of MAIN GEN/115 Vac ±4.

b. MAIN GEN — 26.5 to 29.0 Vdc/115 Vac ±4.

c. STBY GEN — ±0.5 Vdc of MAIN GEN/115 Vac ±4.

d. STBY BAT — 24 to 26 Vdc/115 Vac ±4.

e. ESS 1 — Minus 1 ±0.5 Vdc of MAIN GEN/115 Vac ±4.

f. ESS 2 — Minus 1 ±0.5 Vdc of MAIN GEN/115 Vac ±4.

g. NON ESS — ±0.5 Vdc of MAIN GEN/115 Vac ±4.

h. FCS INV — 0 Vdc/115 Vac ±4.

i. MAIN GEN — Select.

19. COMM/NAV equipment — Test and set (as required).

†a. Clock — Set and wound.

(C) †b. DME indicator — Test.

c. Attitude gyro(s) — Caged.

d. BAR ALT(s) — Set to field elevation.

e. RMI — Slaved and aligned.

(C) †f. Marker beacon — Test.

†g. RAD ALT(s) — Test and set.

†h. VHF — Test and set.

(B) †i. VOR — Tune and set.

(C) †j. NAV 1 and HSI/CDI — Tune and set.

(C) †k. GPS and HSI/CDI test — Test and set.

†l. Transponder — Test and set.

(C) †m. ADF — Tune and set.

†n. UHF — Test and set.

7.11 HYDRAULICS CHECK

Note

The Hydraulics Systems Check is to determine proper operation of hydraulic actuators for each flight control system. If abnormal forces, unequal forces, control binding, or motoring are encountered, maintenance action is required.

1. Collective — Full down, friction removed.
2. Twist grip — Full open, N_f/N_r 100 percent.
3. FORCE TRIM — OFF.
4. HYDRAULIC BOOST switch — OFF.
5. Cyclic — Centered, friction removed. Check normal operation of cyclic control by moving cyclic in an “X” pattern right forward to left aft, then left forward to right aft (approximately 1 inch). Center cyclic.
6. Collective — Check for normal operations by increasing collective control slightly (no more than 2 inches). Repeat three times checking for binding. Return to full down position.
7. HYDRAULIC BOOST switch — ON.
8. FORCE TRIM — ON.
9. Cyclic and collective friction — Set as desired.

7.12 TAKEOFF CHECKLIST

1. Twist grip — Full open, N_f/N_r 100 percent.
2. Instruments — Check, within limits.
3. Caution lights — Check.

(C) 4. STAB — ON.

5. FORCE TRIM — ON.
6. ENGINE ANTI-ICING — ON/OFF.

7. Pitot heat — ON/OFF.
8. Shoulder harnesses — Locked.
9. Doors — Secured.
10. Crew/passengers — Secure.
11. Instrument Flight Checklist — As required.

7.13 TYPES OF TAKEOFF

Because of the versatility of helicopters and their ability to take off from small areas, conditions at the time of takeoff are the governing factors in the type of possible takeoff techniques. These governing factors include gross weight of the helicopter, density altitude, size of the takeoff area, and the tactical situation.

7.13.1 Vertical Takeoff to Hover

A vertical takeoff can be accomplished whenever the helicopter is capable of hovering with the skids 2 to 10 feet above the ground. The hover charts in Part XI can be used to determine if the helicopter can hover out of ground effect and in ground effect (5 feet skid height). The vertical takeoff is the most common type of takeoff and should be used whenever possible. The helicopter is lifted from the ground vertically to a height of approximately 5 feet, where the flight controls, engine, and cg can be checked for normal operation before continuing. A vertical takeoff is made in the following manner: Increase the twist grip to full open with the collective pitch full down and set rpm 100 percent N_f; place the cyclic control in the neutral position and increase the collective slowly and smoothly until reaching a hover altitude of 5 feet; adjust the pedals to maintain heading as the collective is increased, making minor corrections with the cyclic control to ensure a vertical ascent.

7.13.2 No-Hover Takeoff

This takeoff is utilized for an expeditious departure or where a vertical takeoff to a hover is undesirable (e.g., in heavy sand or loose grass). With the aircraft on the ground, coordinate increased collective with simultaneous forward cyclic to take off smoothly and move directly into translational lift. Maintain normal takeoff attitude until translational lift is attained, then proceed with a normal climb.

7.13.3 Maximum Power Takeoff

Place the cyclic control in the neutral position. Increase collective pitch smoothly. As the helicopter leaves the ground, continue increasing power to the maximum available torque pressure (not to exceed 100 percent). As power is increased, maintain heading by smoothly coordinating pedals. When sufficient altitude for obstacle clearance is attained, smoothly increase airspeed and reduce power to establish a normal climb.

7.13.4 Confined Area Takeoff

Prior to landing in the confined area, check the torque required for a 2-foot hover. Compute the power available from Hover In Ground Effect/Hover Out of Ground Effect (HIGE/HOGE) chart. Select the best takeoff route by optimizing the wind/obstacle combination. Include a 10-foot buffer zone over the highest obstacle. Whenever possible, the takeoff should be initiated from the downwind one-third of the Landing Zone (LZ). This will provide the most shallow departure glideslope. Form an imaginary line from a point on the leading edge of the helicopter to the highest barrier that must be cleared. This line of ascent will be flown using that power required to clear the obstacle by a safe distance. When clear of obstacles, lower nose slightly to gain airspeed and transition to normal climb.

7.13.5 Crosswind Takeoff

In a crosswind takeoff, there will be a definite tendency to drift downwind. This tendency can be corrected by applying cyclic into the wind. When making a crosswind takeoff, it is advisable to turn the helicopter into the wind for climb as soon as obstacles are cleared and terrain permits.

7.13.6 Maximum Load Takeoff

To perform a maximum load takeoff, apply power until the aircraft is just clear of the ground. Smoothly apply a slight amount of forward cyclic in order to begin forward motion. Do not attempt to rush the forward motion of the helicopter, as it will settle to the ground. As translational lift is gained, the aircraft will begin to climb in a near level attitude. Continue as in a normal transition to forward flight.

7.14 INSTRUMENT FLIGHT CHECKLIST

1. Altimeter — Set and note altimeter error.

Once airborne, check the following in a turn to the right and left:

2. Turn needles — Check.
3. Heading indicators — Check.
4. Attitude indicators — Check.
5. Magnetic compasses — Check.
6. IVSIs — Check.
7. Airspeed indicators — Check for reading of zero or wind across the deck.
8. RAD ALTs — Check set.

Check the following properly set and tuned:

9. NAVAIDs — Check.
10. Transponder — Check.
11. Radios — Check.
12. Clock — Check set and running.
13. Engine and transmission instruments — Check normal, N_f/N_r – 100 percent.
14. Hover check — Performed on duty runway.
15. Transponder — ALT.
16. Takeoff time — Note.
17. Fuel — Note.

7.15 AIR TAXIING

Movement of the helicopter from one ground position to another can be accomplished by air taxiing at an altitude of 5 feet (skid tube to ground surface). From a hover, apply sufficient cyclic to establish a slow rate of movement over the ground in the desired direction. Normally, the nose of the aircraft should point in the desired direction of movement. Sideward and rearward flight may be necessary for use in high winds and in confined areas. Caution should be exercised when in the vicinity of other aircraft because of rotor turbulence. Particular attention is directed to the increased rotorwash and its effects on loose objects and debris in the vicinity of the helicopter. Sufficient ground personnel must be available to provide for the safe taxiing of helicopters in the vicinity of obstructions or other aircraft. Only approved standard taxi signals shall be used.

7.16 CLIMB

Hover briefly to check the engine and flight controls. From a normal hover at 5 feet of altitude, apply forward cyclic pressure and accelerate smoothly into effective translational lift. Maintain hovering altitude with collective pitch and maintain heading with pedals until reaching translational lift. Smoothly lower the nose to an attitude that will result in an accelerating climb of 20 feet and 40 knots, and 50 feet and 65 knots.

As the helicopter accelerates, it passes through a transitional period. If engine power, rpm, and collective pitch are held constant in calm air, a momentary settling will be noted when the cyclic control stick is moved forward to obtain forward speed.

This momentary settling condition is a result of the decrease in vertical thrust because of the tilting of the tip-path plane of rotation of the main rotor blades to obtain forward speed. Wind velocity at the time of takeoff will partially eliminate this settling because of the increased airflow over the main rotor blades. As wind velocity increases, the settling will be less pronounced. After encountering translational lift, less power is required to maintain steady state flight because of a decrease in induced drag and an increase in aerodynamic efficiency as airspeed is increased. Takeoff power should be maintained until a safe autorotative airspeed is attained, then power may be adjusted to establish the desired rate of climb.

The normal climb is made at 70 KIAS. Maximum rate of climb is 50 KIAS. Minimum IMC climb is 65 KIAS. Refer to performance charts in Part XI for optimum climb airspeeds.

7.16.1 Level-Off Checklist

1. Check OAT and engage anti-ice and pitot heat as required, determine V_{ne}.
2. Engine rpm and power set for desired airspeed.
3. Attitude gyros displaying accurate information when cross-checked with other performance instruments.
4. Heading indicator and magnetic compass checked for continuity.
5. Engine and transmission instruments within limits, caution panel checked.
6. Compare airspeed indicators and barometric altimeters for differences.
7. Write down fuel quantity and time.
8. Activate flight plan if required.
9. Compute ETA at clearance limit based on actual takeoff time.

7.17 CRUISE

Normal cruise shall be conducted at a safe altitude and as dictated by weather, aircraft configuration and weight, terrain and obstacles, mission of flight, safety of helicopter, and safety of persons and property on the ground. Cruise airspeeds are determined utilizing the performance charts in Part XI.

7.18 DESCENT

Conditions that vary the type of descent to be made are gross weight, density altitude, condition of the landing site and terrain, and amount of time desired in which to accomplish the descent. Adjust collective for the desired rate of descent while simultaneously using the cyclic and pedals to maintain attitude and directional heading.

7.19 TYPES OF APPROACHES

7.19.1 Normal Approach

The downwind leg is flown at 70 KIAS, 500 feet above the surface (Figure 7-3). Select the 180° position with reference to the intended point of landing. At the 180° position, commence a coordinated, descending, decelerating turn, to arrive at the 90° position 300 feet Above Ground Level (AGL) and 60 KIAS. Adjust the turn to intercept the final course line with 600 to 800 feet of straightaway, 100- to 200-foot altitude, and 45 to 55 KIAS. When established in the course line, utilize crosswind correction as necessary. At this point adjust nose attitude smoothly to slow airspeed and decrease rate of descent to establish a comfortable glideslope angle (approximately 10° to 20°). When on glideslope, utilize collective to control rate of descent and cyclic to control rate of closure. Maintain heading with pedals. The approach may be terminated in a hover, a no-hover, or a sliding landing.

1. 500 FT AGL, 70 KIAS KTS. ON DOWNWIND
2. ABEAM POSITION 500 FT, 70 KIAS
3. COORDINATED DESCENDING, DECELERATING TURN
4. 90° POSITION, 60 KIAS, 300 FEET
5. INTERCEPTING COURSE LINE 600-800 FT STRAIGHTAWAY, 100-200 FT ALTITUDE, 45-55 KIAS.
6. 5 FT ALTITUDE, ZERO GROUND SPEED

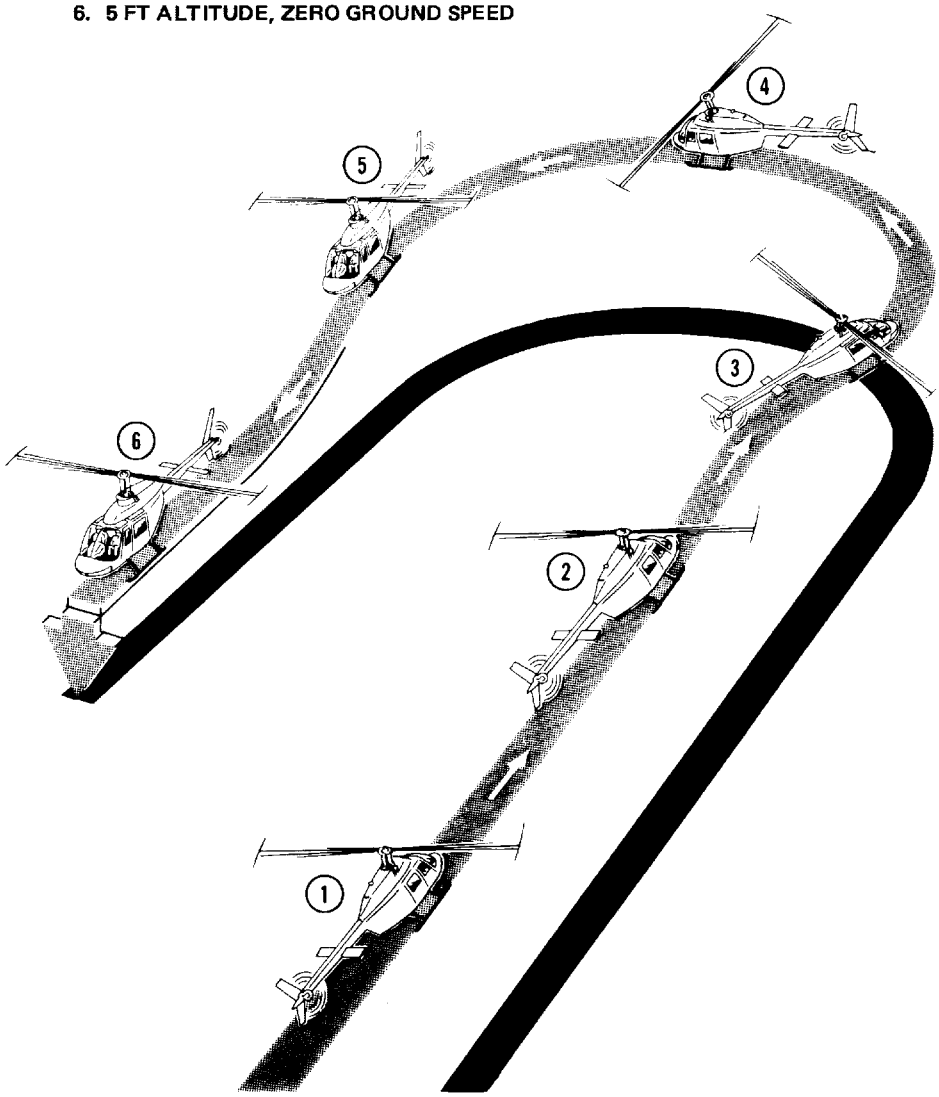

Figure 7-3. Normal Approach

7.19.2 Steep Approach

A steep approach is a steep-angle, power-controlled approach used to clear obstacles and to land in confined areas. At the 180° position, commence a coordinated, descending, decelerating turn to arrive at the 90° position at 300 feet AGL and 60 KIAS. Adjust the turn to intercept the final course line with approximately 800 to 1,000 feet of straightaway and 300 feet AGL or 100 feet above the highest obstacle. Airspeed should be smoothly reduced to 45 KIAS as the approach angle (approximately 25° to 45°) is reached. Reduce collective pitch to establish a descent, and adjust the cyclic to maintain positive forward groundspeed. Utilize collective to control rate of descent and cyclic to control rate of closure. Power requirements are governed by gross weight, wind velocity, density altitude, and approach angle. Maintain heading throughout the approach with pedals. The approach may be terminated in a hover or a no-hover landing.

WARNING

During steep approaches at less than 40 KIAS, avoid descent rates above 800 feet per minute to preclude vortex ring state (see Part IV).

7.20 TYPES OF LANDINGS

7.20.1 Vertical Landing from a Hover

From a hover altitude, lower the collective to establish a slow, controlled rate of descent to a gentle touchdown, making corrections with pedals and cyclic to maintain a level attitude, vertical descent, and constant heading. Upon ground contact, continue to lower the collective smoothly and steadily until the entire weight of the helicopter is resting on the ground.

7.20.2 No-Hover Landing

No-hover landings should be practiced to simulate landing without hovering at high gross weights and high density altitudes. This type of landing may be employed where a transition to a hover is not possible and a running landing is not feasible. Upon intercepting the final course line, adjust the nose attitude to slow airspeed and adjust collective to slow the rate of descent. As airspeed decreases, continue to adjust the collective to control the descent rate and prevent a hard landing. Touchdown should be at 0 knots groundspeed and in a skids-level attitude. Once the helicopter is firmly on the ground, smoothly lower the collective to full down. No-hover landings should be made whenever possible, when operating in snowy, dusty, or sandy areas to avoid loss of visual reference and to minimize wear on engine or rotor blades.

7.20.3 Sliding Landing

Sliding landings should be practiced to simulate conditions where hovering in ground effect is not possible or where maximum gross weight or density altitude prohibits a hover. This maneuver acquaints the helicopter pilot with the technique necessary for successfully landing a skid-configured helicopter on various landing surfaces. Additionally, a sliding touchdown gives the pilot the advantage of greater helicopter controllability during touchdown under high gross weight conditions. Upon intercepting the final course line, adjust the nose attitude to decelerate, but maintain sufficient forward speed to maintain translational lift (13 to 15 knots). Adjust collective as necessary to control the rate of descent. At approximately 5 to 10 feet AGL, level the skids to touch down with 3 to 15 knots groundspeed.

WARNING

Failure to ensure the skids are aligned with the groundtrack and are level at touchdown may result in forward pitching or rollover.

7.20.4 Confined Area Landing

During confined area landings, adjust the angle of descent to ensure the tail rotor clears downwind obstacles by a minimum of 10 feet. Plan the approach to terminate in a hover in the upwind 1/3 of the LZ. Prior to executing a vertical landing, evaluate the LZ to avoid touching down on rough or sloping terrain.

7.21 WAVEOFF

When situations dictate, execute a waveoff by increasing collective to arrest the rate of descent, then adjust cyclic and collective to attain a safe forward airspeed and climb if necessary.

7.22 LANDING CHECKLIST

1. Twist grip — Full open, N_f/N_r 100 percent.
2. Shoulder harness — Locked.
3. Crew/passengers — Secure.
4. RAD ALT — As required.
5. Landing light/searchlight — ON/OFF.

Note

Once on the deck, ensure PITOT HEAT switches are OFF.

7.23 HOT REFUELING/HOT SEATING

Helicopters have the unique ability to refuel/change crews while the rotors are engaged in order to expedite mission accomplishment.

7.23.1 Hot Refuel Checklist

1. VHF or UHF Radio — OFF.
2. Navigation equipment — OFF.
3. Transponder — OFF.
4. Radar altimeter circuit breaker — Pull.

(C) 5. DME circuit breaker — Pull.

6. Searchlight/landing light — OFF.

When in the fuel pits:

7. Twist grip — FLT IDLE.

(C) 8. STAB — OFF.

9. Crew/passengers — Disembark.
10. Monitor radio and make no transmissions except in an emergency when the fuel nozzle is attached to aircraft.

7.23.2 Post-Refuel/Hot Seat Checklist

1. Desired COMM/NAV equipment — ON.
2. Transponder — As required.
3. Radar altimeter circuit breaker — In.

(C) 4. DME circuit breaker — In.

‡5. Flight controls — Check.

‡6. COMM/NAV equipment — Tune.

‡7. TRQ and TOT CBs — Pull and reset. Note any exceedance.

‡8. Flight instruments — Check.

(C) 9. NORMAL/RECOVER switch — Check.

10. Takeoff Checklist — Perform.

‡ Hot Seat Only

7.24 ENVIRONMENTAL CONTROL SYSTEM

7.24.1 Cabin Cooling

1. Cabin heat valve — OFF.
2. AIR COND/FAN switch — AIR COND.
3. HI/FAN/LO switch — HI or LO (as desired).
4. Cabin cooling MIN/MAX knob — As desired.
5. Duct outlets — Open.
6. Cabin vents — Closed.

7.24.2 Cabin Heat

1. Cabin heat valve — As desired.
2. AIR COND/FAN switch — FAN.
3. HI/FAN/LO switch — HI or LO (as desired).
4. Duct outlets — Open.
5. Cabin vents — Closed.

7.24.3 Cabin Defogging

Defogging is best accomplished by simultaneous operation of the air-conditioning or heater in conjunction with the defog blower.

Note

TOT increases with the bleed air heater operating. Observe turbine outlet temperature limitations.

1. AIR COND/FAN switch — As desired.
2. Cabin heat valve — As desired.
3. HI/FAN/LO switch — HI or LO (as desired).
4. Cabin cooling MIN/MAX knob — As desired.
5. DEFOG blower — ON.
6. Duct outlets — Open.
7. Cabin vents — Closed.

7.25 SHUTDOWN

Pilot shall ascertain, prior to shutdown, that the area is clear and that personnel around the helicopter are either outside the tip-path of the main rotor or within arm's length of the fuselage. During any operation, the pilot is responsible for keeping personnel around the helicopter to a minimum number for safe operations.

7.25.1 Shutdown Checklist

(C) 1. STAB — OFF.

2. Hydraulics Check — Perform.

3. Twist grip — FLT IDLE (note time).

4. ENGINE ANTI-ICING — OFF.

5. Landing light/searchlight — OFF.

(C) 6. STBY ATT IND — OFF.

(C) 7. STBY GEN — OFF.

8. PITOT HEAT — OFF.

9. DEFOG blower — OFF.

10. Cabin heat valve — OFF.

(C) 11. AVIONICS MASTER switches — OFF.

(B) 12. Avionics — OFF.

(C) 13. Voltmeter select switch — MAIN BAT.

After 2 minutes at FLT IDLE and TOT stabilizes for 30 seconds:

14. ECS — OFF.

15. AUD/MUTE switch — MUTE.

16. MAIN GEN — OFF.

17. Position lights — Flashing ON/OFF.

18. Twist grip — CLOSE.

Note

Securing the engine with the fuel shutoff valve may prevent engine light-off on subsequent start.

19. Anti-collision lights — OFF.

(C) 20. Rotor brake — Apply (between 38 to 30 percent N_r).

CAUTION

Do not apply rotor brake if pressure gauge indicates no hydraulic pressure. It is recommended the rotor brake not be applied below 30 percent N_r. If the brake must be applied below 30 percent N_r, apply slowly to prevent abrupt engagement and internal transmission damage.

Note

For maximum braking effort, pull down on lever to point of greatest pressure and hold until rotor stops.

21. Overhead switches — Off.
22. BAT — OFF.

CAUTION

Prior to securing the battery, ensure TOT is stabilized below 400 °C and N_g at zero.

7.26 POSTFLIGHT EXTERNAL INSPECTION

A postflight inspection shall be made by the pilot.

This inspection is a general visual inspection of the following areas:

1. Rotorhead.
2. Hydraulic servo area.
3. Transmission area.
4. Engine area.
5. Tail rotor and tail assembly.
6. Landing skids.

Note

To help reduce turbine rub or carbon lock, rotate the main rotor clockwise two complete revolutions as the engine cools. Stop if unusual resistance or chatter is encountered.

CHAPTER 8

Shipboard Procedures

8.1 INTRODUCTION

Aside from the tactical environment, daily shipboard operations routinely provide the most demanding challenge to the fleet naval aviator. Environmental elements of wind, weather, and sea state coupled with the land/launch platform and mission objectives pose the daily flux of shipboard operations. Whether operating as a unit detachment or entire squadron, once embarked aboard the ship, it is necessary to become an integral part of ship operations.

There are three general types of shipboard operations to consider:

1. Air–capable ships (ships other than CV/CVN/LPH/LHA/LHD).
2. Amphibious aviation ships (LPH/LHA/LHD).
3. Aviation ships (CV/CVN).

Procedures for each of these classes of ship differ in many details, primarily in the flight operation phase. Prior to operating aboard any of these classes of ships, the appropriate shipboard NATOPS and NWP 3–04.1 should be reviewed with respect to TH–57B/C operations.

WARNING

TH–57B aircraft are not equipped for overwater operations in night or IMC conditions. Only TH–57C aircraft may be operated aboard ship in night or IMC conditions.

8.2 QUALIFICATION AND CURRENCY REQUIREMENTS

The pilot will practice shipboard landing procedures and patterns at a field prior to qualifying aboard ship. Qualifications for each type of shipboard operation (air–capable ship, amphibious aviation ship, and aviation ship) are treated separately. Night qualifications are treated separately from day qualifications. The pilot must be qualified for daytime shipboard landings prior to performing night shipboard landings. The pilot may practice night shipboard field operations once he is day field current even if he has not completed his day shipboard landings.

8.2.1 Air–Capable Ship Qualification

Air capable ship qualification (commonly referred to as small–deck qualification) shall consist of field deck landing practice followed by deck landing qualification. Once deck landing qualified, the pilot must maintain currency in that qualification. If his currency lapses, he shall repeat the initial qualification procedure. Air–capable ship qualification and currency standards satisfy requirements for amphibious/aviation ships.

1. Day Flight Deck Landing Practice (FDLP) — The pilot is day qualified when he has completed five day FDLP landings and takeoffs. The day FDLP currency requirement is 5 day FDLP landings and takeoffs in the preceding 30 days.
2. Initial Day Deck Landing Qualifications (DLQ) — The pilot is day small–deck qualified when he has completed five day small deck landings and takeoffs. The pilot shall be day FDLP current during initial day DLQ landings and takeoffs.

3. Night FDLP — The pilot is night FDLP qualified when he has completed five night FDLP landings and takeoffs. The night FDLP currency requirement is five night FDLP landings and takeoffs in the preceding seven days. The pilot must be day FDLP current or day DLQ current prior to any night FDLP landings and takeoffs.

4. Initial night DLQ — The pilot is night DLQ qualified when he has completed five night small–deck landings and takeoffs. The pilot shall be night FDLP current during initial night DLQ landings and takeoffs.

Note

No pilot shall make a night small–deck landing or takeoff without having performed at least two day small–deck landings and takeoffs within the preceding two days.

Once initially small–deck qualified, the pilot need not continue FDLP practice prior to shipboard operations unless desired by the local command. If the pilot is initially qualified and meets the following currency requirements, he is considered ready for small–deck operations. If the currency of the pilot lapses, he shall complete the initial qualification cycle, including FDLP, to requalify.

5. Day DLQ currency — The pilot is day DLQ current if he has completed 2 day small–deck landings and takeoffs within the preceding 90 days.

6. Night DLQ currency — The pilot is night DLQ current if he has completed 3 night small–deck landings and takeoffs within the preceding 30 days.

Note

- No pilot shall make a night small–deck landing or takeoff without having performed at least two day small–deck landings and takeoffs within the preceding two days.
- Lapse of night currency requires only the night FDLP and initial night DLQ cycle if day DLQ currency is not lost.

8.3 BRIEFING

Briefs shall include the information given in the briefing section of this manual and the information required by the appropriate shipboard NATOPS and NWP 3–04.1. When briefing initial ship qualification evolutions, the following shall specifically be addressed:

1. Helicopter director signals.
2. Wind directions and velocity for flight operations.
3. Use of helicopter lights (if night operations).
4. Traffic patterns and altitudes at the ship.
5. Scheduled recovery time.
6. Special safety precautions during shipboard operation.
7. Ship navigational aids.
8. Ship position in the force.
9. Ship path of intended movement and nearest land.
10. Weather forecast and weather over nearest land.

8.4 HANGAR AND FLIGHT DECK OPERATIONS

8.4.1 Securing the Aircraft

The TH–57 was not designed for extended periods of sea basing and does not have tiedown points designed for use in even moderate sea states. Should it become necessary to secure the helicopter aboard ship, the skid tubes should be considered as a primary tiedown point. In extreme situations, where loss of the aircraft because of sliding or rollover is considered a possibility, lines may be attached to the rotor mast to provide added stability. The main rotor shall always be secured when the aircraft engine is not running or preparing to start.

CAUTION

Chains shall not be attached to the fuselage or any dynamic component unless such action is considered the only feasible way to prevent loss of the aircraft. Extensive damage can be expected if chains are attached to the fuselage or dynamic components.

Note

Should it become necessary to secure the aircraft aboard ship, the commanding officer of the ship shall be notified of the relatively fragile nature of the TH–57 so that he may take action to limit ship motion.

8.4.2 Precautions in Movement of Helicopters

Precautions must be observed in the movement of the helicopter to preclude damage to the rotor blades and the relatively light structural members. The main rotor blades must be secured to the tailboom during all deck handlings.

WARNING

Care should be taken to ensure the support pins on the wheel assemblies are fully seated in the rod and connectors on the skid tubes. This is to preclude the support from slipping out and allowing the wheel assembly to be thrown into the side of the aircraft, causing airframe damage or injury to personnel. The movable pin should point to the rear when properly installed.

Handbrakes should be installed on the wheel assemblies and should be manned during all deck handling operations. A qualified aircraft handler shall be stationed on the tail skid to provide steerage and to take the weight of the aircraft off the front end of the skid tubes. In heavy seas, two aircraft handlers should be assigned to the tail stinger for safety. Movement on the flight or hangar deck can be accomplished by a tractor equipped with a standard towbar or by a sufficient number of aircraft handlers. All hands should be warned of the possibility of a tail whip when pushing the helicopter and should direct their attention to the controlling director.

Handbrakes should be applied instantly upon whistle or hand signal whenever possible. Ensure the helicopter is towed or pushed only at a rate consistent with safety by using light brake pressure to slow if necessary. Consider heeling of the slippery decks of the ship, crowded quarters, etc. A safety director is normally astern and may blow the whistle to signal a stop. The rule is to stop when a whistle is heard. Ensure tiedowns are installed after movement has been completed. It may be necessary to alert flight deck and hangar personnel to helicopter–fragile areas and handling procedures upon initial arrival aboard ship. The following precautions should be emphasized:

1. Apply handbrakes evenly on both sides to stop.
2. Do not use horizontal stabilizer to push aircraft.

3. Remain clear of antenna posts.
4. Keep feet clear of skid tubes and wheel assemblies.
5. Lower aircraft slowly and evenly on wheel assemblies.

8.4.3 Flight Deck Operations

The appropriate shipboard NATOPS and NWP 3-04.1 will address flight deck operations in detail. The following points are of particular importance:

1. Flight deck handling procedures and aircraft handling signals are contained in the Aircraft Signals NATOPS Manual (NAVAIR 00-80T-113).
2. Personnel not required for plane handling should remain clear of the flight deck during launch and recovery of helicopters.
3. Starting engine and rotor shall be done only upon direction of personnel from the ship air department.
4. Air taxiing and movement of helicopters shall be under the positive control of landing signalmen enlisted.

8.4.4 Preflight/Postflight

Shipboard preflight and postflight are basically the same as done while shore-based. Ensure there is no buildup of salt encrustation on the engine or dynamic components. While preflighting, exercise caution, as the aircraft may have numerous tiedowns and the ship may move unexpectedly. This motion becomes more dangerous as personnel climb on top of the helicopter.

8.5 LANDING SIGNALMAN ENLISTED

The LSE provides directional and informational signals to the pilot. He is a critical link during shipboard evolutions as he provides clearance and lineup information in situations where the pilot has few visual references or a limited field of view.

Note

- The ultimate responsibility for the safety of the aircraft and crew remains with the pilot in command.
- LSE signal to hold or waveoff are mandatory. All other signals are advisory.

8.6 NIGHT OPERATIONS

8.6.1 Preflight/Postflight

Night shipboard preflight and postflight are conducted the same as in daylight, with extra attention being given to aircraft lighting. The general rules of not showing white lights on the flight deck should be observed whenever possible.

8.6.2 Taxi and Operations

The tempo of operations, both in volume and speed, is considerably reduced at night. Slow and careful handling of helicopters by both LSEs and pilots is mandatory. If the pilot has any doubt about LSE signals, he should stop his helicopter.

8.7 EMERGENCY PROCEDURES

Any helicopter experiencing trouble in flight will immediately notify the flight leader by radio or by visual signals as the situation dictates. When a helicopter leaves the flight, it should be accompanied by the wingman. If the nature of the emergency warrants an immediate return to the ship, a radio call should be made to enable the ship to prepare for landing. In any case, the following information should be transmitted to the ship:

1. Side number.
2. Position.

3. Difficulty.
4. Intentions.
5. Souls on board.

If the helicopter having the emergency does not have radio contact with the ship, all possible information is relayed by radio or visual signals to the wingman, who makes the necessary radio transmission. If communications are lost, the helicopter signals to indicate an emergency are:

1. External light flashing bright.
2. Landing light on (during approach to the ship).

8.8 AIR-CAPABLE SHIP OPERATIONS

8.8.1 Field Deck Landing Practice

FDLP shall be conducted to simulate shipboard operations as closely as possible. At a minimum, a landing area with representative deck markings shall be used. FDLPs shall always be conducted with a qualified LSE providing guidance.

Night FDLP shall be conducted with simulated flight deck lighting including wands for the LSE and a visual glideslope. Whenever possible, a glideslope indicator shall be used. A glide angle indicator light may be used if a GSI is not available.

8.8.2 Relative Winds

1. Relative winds for shipboard engagement and shutdown shall be in accordance with Chapter 4 of this manual (refer to Figure 4-2).
2. Launch and recovery winds are in accordance with Figure 8-1 for IX-514.
3. Launch and recovery winds for any other capable ships, use current NWP 3-04.1 or applicable LHA/LPH/LHD or CV NATOPS manuals.

8.8.3 Launch Procedures

1. When cleared, smoothly lift the helicopter into a 5-foot hover; stabilize the aircraft momentarily to check gauges and caution lights.

WARNING

The aircraft commander shall ensure all tiedowns are removed prior to lifting from the deck.

CAUTION

Moderate engine/rotor rpm droop and slight settling of the helicopter maybe experienced immediately after lift-off while clearing the deck. Transient droop can be reduced by raising collective slowly and smoothly.

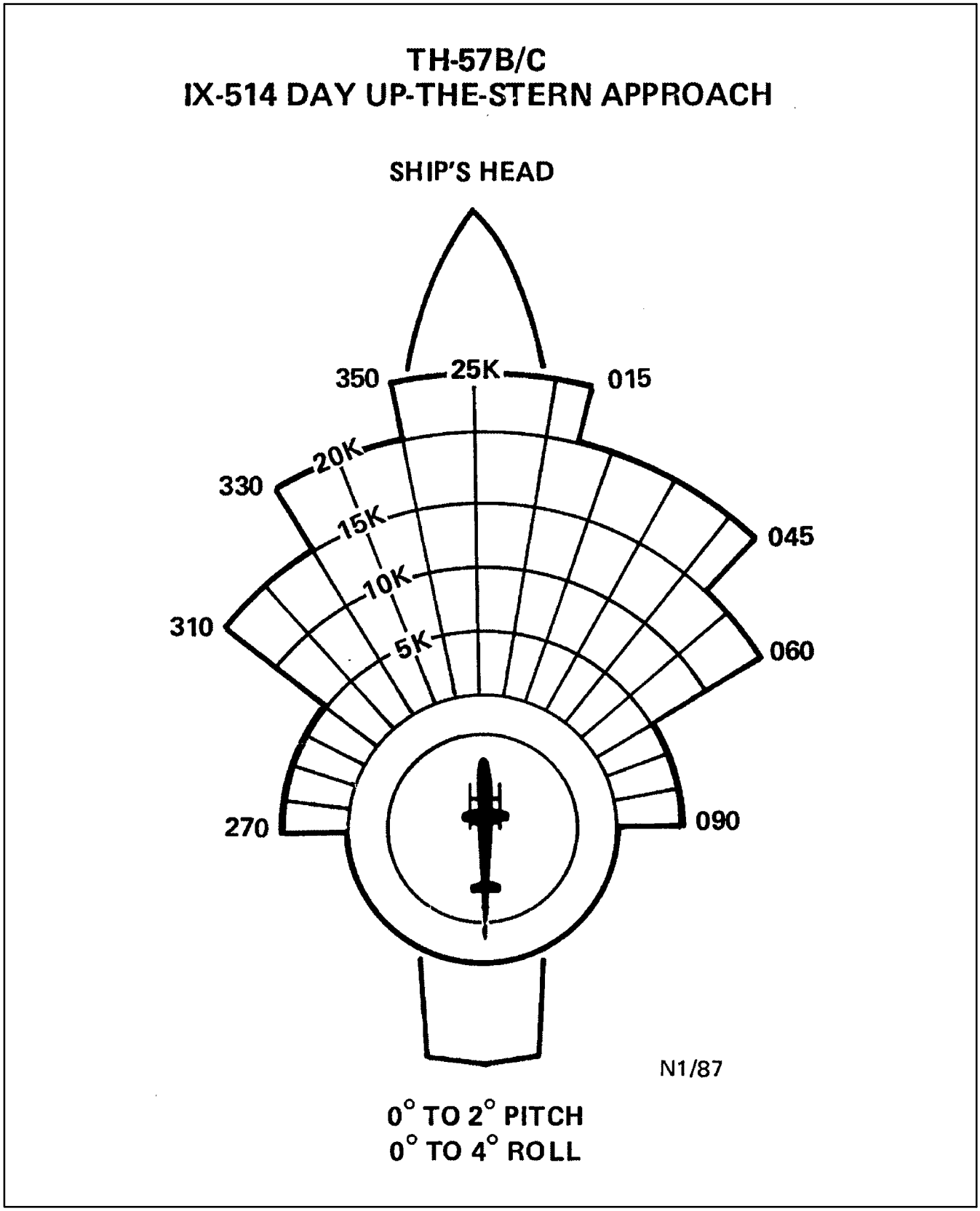

Figure 8-1. Launch and Recovery Winds (Sheet 1 of 4)

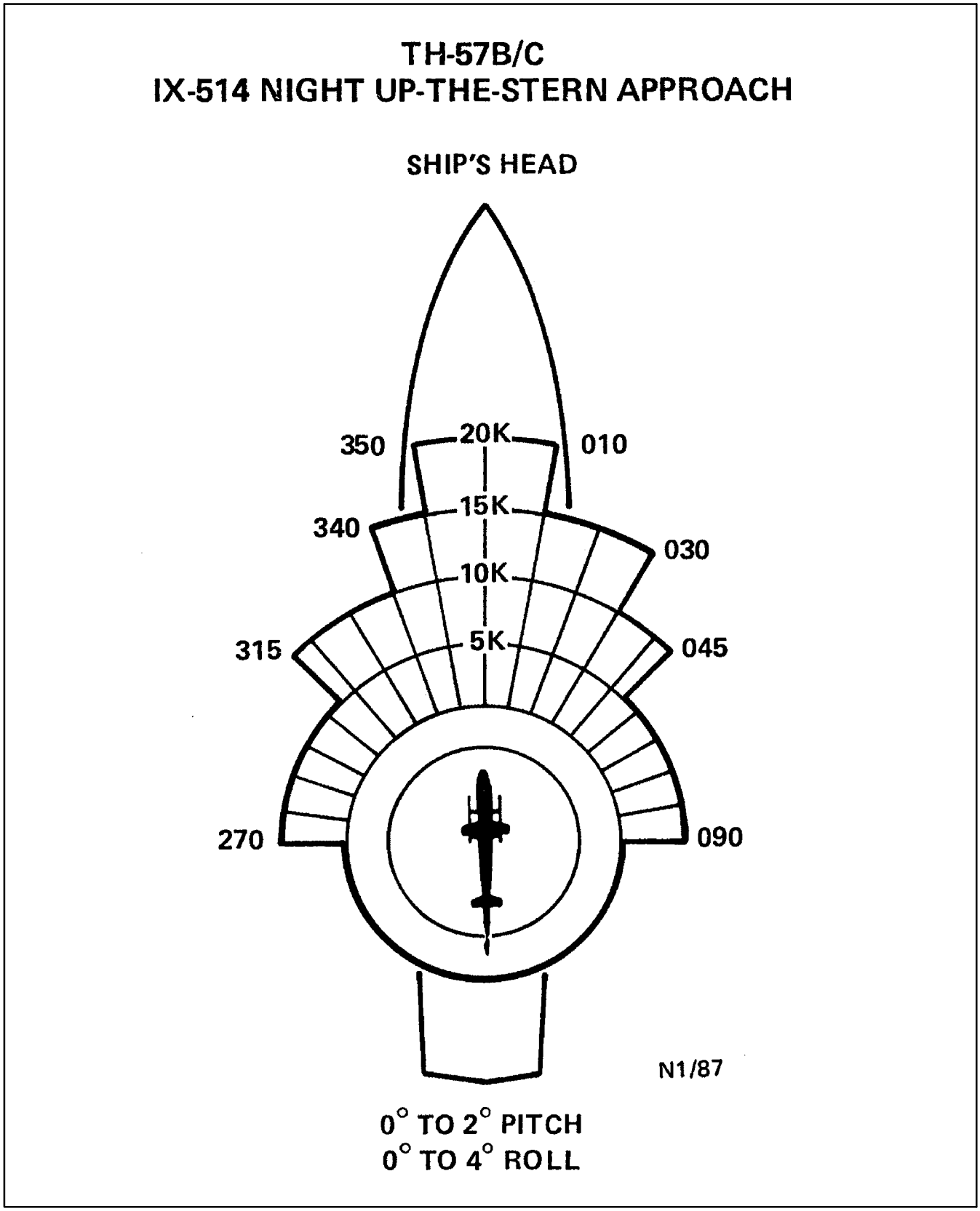

Figure 8-1. Launch and Recovery Winds (Sheet 2)

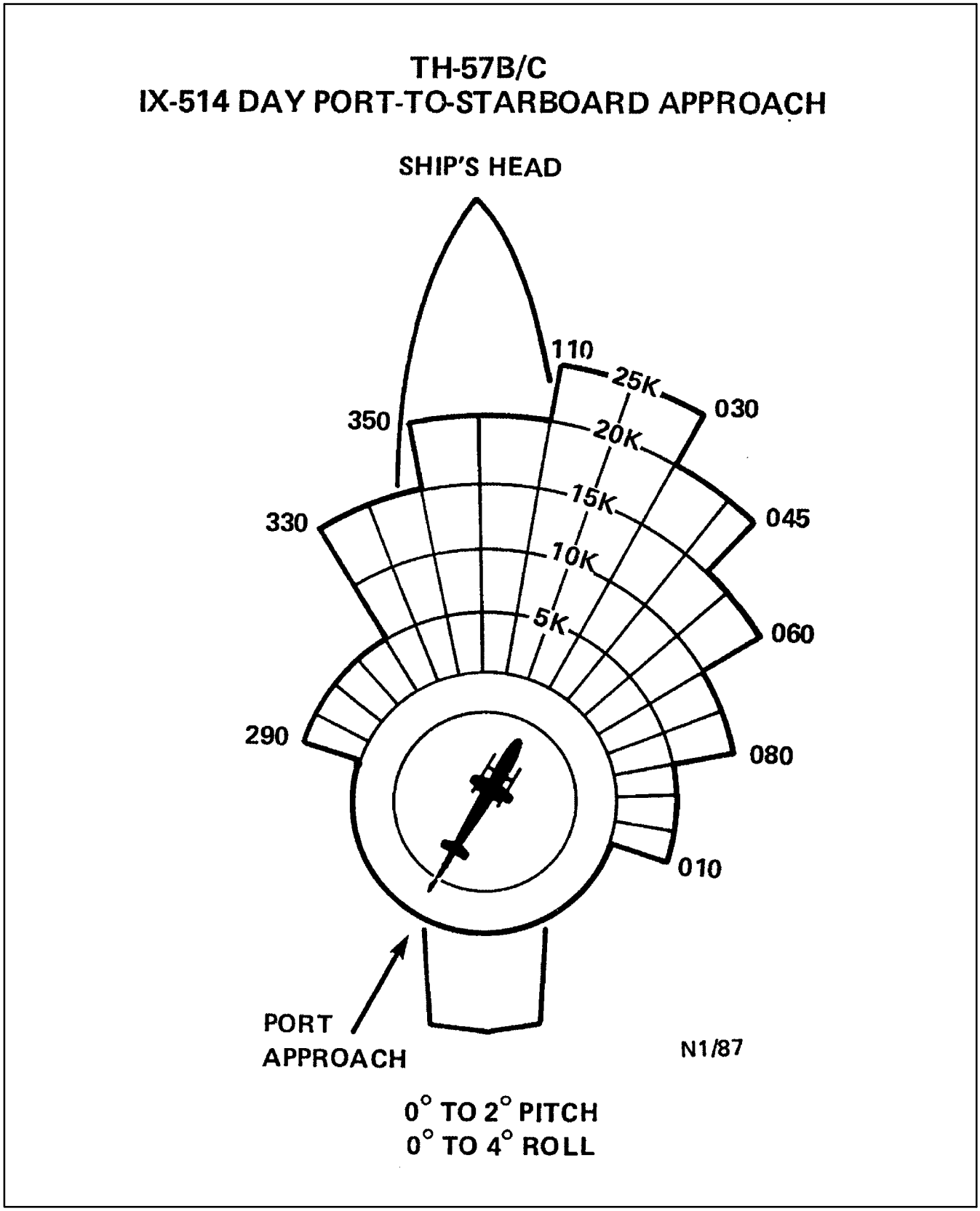

Figure 8-1. Launch and Recovery Winds (Sheet 3)

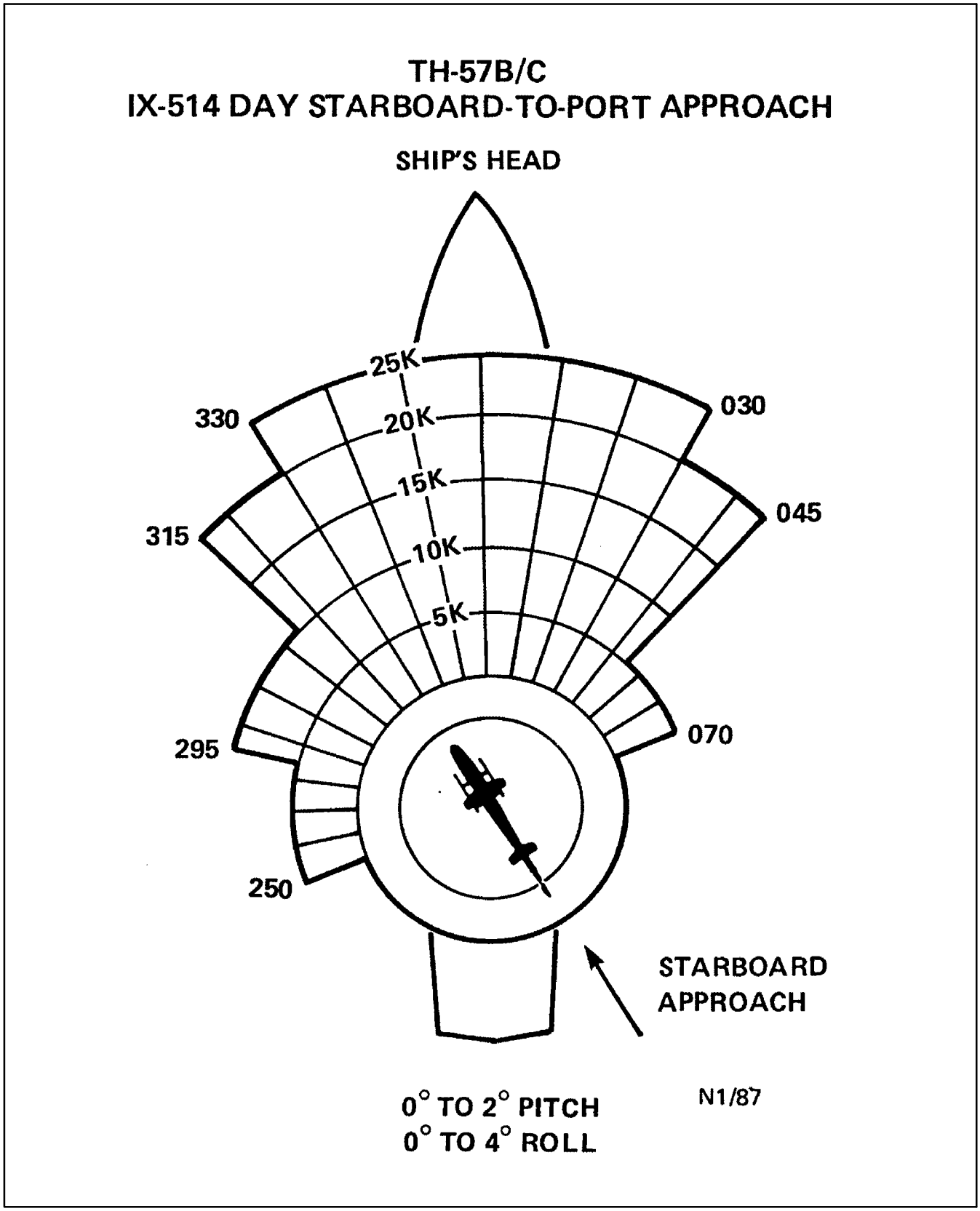

Figure 8-1. Launch and Recovery Winds (Sheet 4)

2. Slide the aircraft to the side to clear the deck and superstructure. During the slide, the aircraft heading will be maintained perpendicular to the track of the aircraft. The slide normally will be perpendicular to the lineup line in use. If a direct stern lineup line is used, the pilot may pedal–turn the aircraft so his slide moves the aircraft away from obstructions forward of the aircraft.

WARNING

When crossing the deck edge, wind burble may be very pronounced. Additionally, the loss of ground effect is abrupt. Care must be exercised to avoid settling or loss of control.

3. Transition to forward flight on a course slightly diverging from the course of the ship, ensuring the aircraft climbs and accelerates at the same time.
4. Rendezvous should be in accordance with Part IV.

8.8.4 Recovery Procedures

1. Breakup — Helicopters should approach the ship on a heading that will parallel the base recovery course. The flight leader breaks in the appropriate direction approximately 400 yards ahead of the bow. Each succeeding helicopter breaks to maintain a minimum, but safe, interval.
2. Downwind — The downwind leg is flown at 70 knots, 300 feet AGL, with 1,000 feet of lateral separation from the ship.

Note

The air–capable landing pattern of the ship is an oval oriented along the lineup line in use and on the side of the ship to which aircraft are taking off.

3. Approach — The turn to final will begin no sooner than the 180° position. Make a descending, decelerating turn to intercept the final approach course as shown by the lineup line. The final approach should be relatively flat to eliminate the necessity for exaggerated power changes or excessive flares near the deck. Cross the deck with 5 to 10 feet of skid clearance over the deck. Continue up the lineup line to the touchdown circle.

WARNING

Wind burble may tend to decrease when transiting downwind of the ship. It will become more pronounced as the aircraft moves closer to the deck.

Note

Do not descend too rapidly during the approach. Avoid a final approach that ends in an air taxi to the deck.

4. Waveoff — Should a waveoff be required, it will normally be made to the same side of the ship as the landing pattern. In extreme situations, a waveoff may be executed to the side opposite the landing pattern. Avoid overflying the ship if possible.
5. Landing — When cleared, smoothly lower the aircraft to the deck. Maintain heading parallel to the lineup line. Center the aircraft in the touchdown circle (rotor mast/cargo hook over the touchdown spot). Once the skids are in full contact with the deck, lower the collective full down to allow the aircraft weight to hold the aircraft in position.
6. Night Recoveries — Night approaches will normally be made using a much longer final approach. When the lineup line is intercepted, the Stabilized Glideslope Indicator (SGSI) will provide glideslope guidance. Details on the SGSI approach are contained in NWP 3–04.1. Night landings require careful attention by all concerned, as relative motion is much more difficult to distinguish.

CHAPTER 9

Special Procedures

9.1 PRACTICE AUTOROTATIONS

Practice autorotations (Figure 9-1) with power recoveries will be initiated with sufficient altitude to permit full recovery at an altitude of 5-feet above the surface. From this point, apply power and continue straight ahead as in a normal takeoff. Practice autorotations will always be made into the wind and will be performed at approved landing areas or airfields. Plan the autorotation to an area that will permit a safe landing in an actual emergency, preferably a hard, flat, smooth surface clear of approach and rollout obstructions. Practice autorotations should not be attempted in conditions of critical center-of-gravity loadings. Autorotations in conditions of high gross weight produce steeper angles of descent, increased rates of descent, and high rotor rpm. For practice autorotations, the minimum entry altitude should be 500 feet above the terrain and the airspeed should not be less than 60 knots. Simulated emergencies over terrain may be executed where a landing may be made, but is not intended. Recovery will be made at not less than 200 feet above the terrain and not less than 50 knots. These simulated emergencies are primarily for the purpose of developing sound judgment in the selection of the best available site in an emergency situation.

WARNING

If the N_g deceleration time takes less than 2 seconds from 100 percent N_r to 65 percent N_g, then engine flameout could occur when reducing twist grip to flight idle when conducting power off maneuvers.

Note

- When reducing the twist grip to flight idle for power off maneuvers, use a smooth, quick motion. Failure to do so can result in illumination of the ENG OUT caution light as well as an aural tone.
- If the helicopter is only slightly out of balanced flight, the rate of descent will be increased. An acute unbalanced condition can result in an extremely high rate of descent.

9.1.1 Power Recovery Autorotation

After a normal autorotative entry (Figure 9-1), adjust the collective pitch control as necessary to maintain rotor rpm between 90 to 107 percent. Autorotations are performed at an airspeed of 50 to 72 KIAS. At 75 to 100 feet AGL, commence a smooth flare sufficient to slow the groundspeed and rate of descent. While in the flare, rotate the twist grip to full open. Monitor rotor rpm as necessary to maintain rpm between 90 to 107 percent. At 10 to 15 feet AGL, smoothly raise collective to slow the rate of descent, maintain heading with pedals, and lower the nose toward the level attitude. Recover in a five-foot air taxi at 0 to 10 knots groundspeed.

CAUTION

An excessively nose-high attitude in the flare at too low an altitude may result in the tail skid contacting the ground. This can cause serious structural damage to the aircraft.

1. 500 FEET AGL AND 60 KIAS MINIMUM.
2. COLLECTIVE FULL DOWN, RIGHT PEDAL AS REQUIRED. TWIST GRIP FLT IDLE. COORDINATED TURN TO COURSE LINE.
3. CONTINUE TURN TO COURSE LINE WITH 50 TO 72 KIAS.
4. 75 TO 100 FEET AGL, RAISE NOSE IN A FLARE, TWIST GRIP FULL OPEN.
5. AT 10 TO 15 FEET AGL, SMOOTHLY RAISE COLLECTIVE TO SLOW THE RATE OF DESCENT, MAINTAIN HEADING WITH PEDALS, AND LOWER THE NOSE TOWARD THE LEVEL ATTITUDE.
6. RECOVER IN A 5 FOOT AIR TAXI AT 0 TO 10 KNOTS GROUNDSPEED.

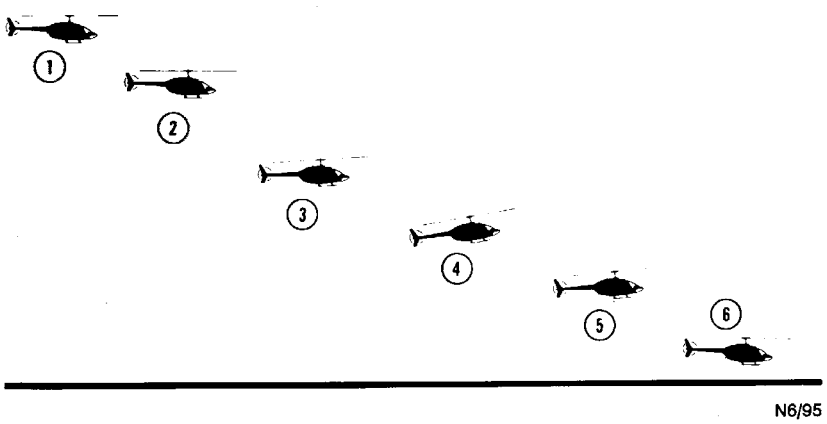

Figure 9-1. Power Recovery Autorotation

9.1.2 Full Autorotation

A full autorotation (Figure 9-2) is performed in the same manner as the practice autorotation with power recovery except that the twist grip remains at FLT IDLE throughout the maneuver. At about 10 to 15 feet of actual altitude, smoothly raise the collective pitch control to slow the rate of descent, maintain heading with pedals, and lower the nose toward the level attitude. Do not land in a skid. Continue to increase the rate of collective pitch control movement so as to touch down gently.

When the helicopter is on the ground, adjust collective pitch control as necessary to allow the aircraft to slide to a gradual stop, maintaining heading with pedals. Touchdown should be accomplished at 0 to 10 knots groundspeed.

WARNING

Low rotor rpm during landing rollout reduces pilot control of the tip-path plane. Use of cyclic to control aircraft pitch during rollout may result in the blades contacting the tailboom. Upon ground contact, collective should be reduced smoothly without delay while maintaining cyclic near center position.

The following conditions may induce destructive vibrations in the aircraft during full autorotative landings if the rotor rpm falls below 70 percent:

1. Wind exceeding 20 knots; gusts exceeding 10 knots.
2. Groundspeed upon touchdown above 10 knots.

1 & 2. COLLECTIVE FULL DOWN. RIGHT RUDDER AS REQUIRED. COORDINATED TURN TO LANDING LINE.
3. CONTINUE TURN TO LANDING LINE, 50 TO 72 KIAS AS APPROPRIATE, 100 KIAS MAXIMUM, CONTROL RPM WITH COLLECTIVE.
4. FLARE AT APPROPRIATE ALTITUDE.
5. APPROXIMATELY 10 TO 15 FEET, INCREASE COLLECTIVE.
6. TOUCHDOWN AT 0 TO 10 KNOTS GROUNDSPEED.

Note

THERE CANNOT BE A SET PROCEDURE FOR EMERGENCY HELICOPTER LANDINGS, AS CONDITIONS OF TERRAIN AND GROUND OBSTRUCTIONS WILL VARY THE TYPE OF APPROACH. THIS DIAGRAM ILLUSTRATES A TYPICAL APPROACH PATTERN FOR A POWER OFF LANDING.

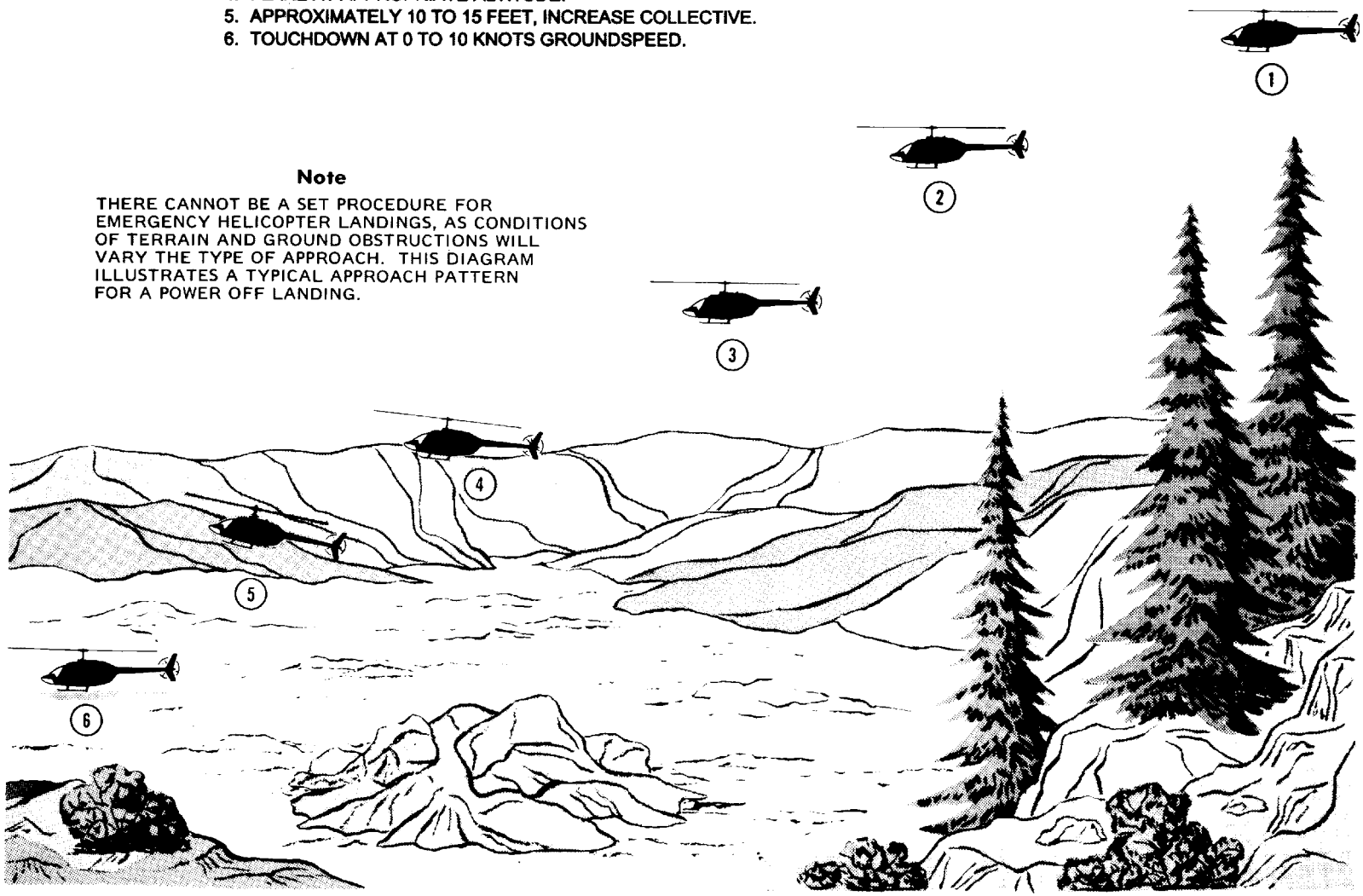

N9/97

Figure 9-2. Full Autorotation

3. Crosswind component in excess of 10 knots.

CAUTION

- Touchdown rotor rpm above 70 percent is recommended. Abrupt movement of the cyclic after touchdown at low rotor rpm may result in the Kaflex contacting the isolation mount or doing more severe damage to the engine-to-transmission drive train. Avoid moving the cyclic after ground contact.
- To prevent compressor stall, stabilize the N_g at flight idle for a minimum of 15 seconds with the collective full down. Neutralize the directional control pedals and, after the N_f/N_r has stabilized at approximately 60 to 65 percent, slowly open the twist grip to the full open position (do not exceed 40-percent torque).
- After 15 seconds, if N_r has not stabilized above 60 percent a slight increase of twist grip is necessary. Utilize enough twist grip to increase N_r above 60 percent. A MAF should be initiated upon completion of flight.

Note

Under conditions of high gross weight, the flare must be commenced at a slightly higher altitude and executed with moderation. Care must be exercised to prevent rotor rpm overspeed in the flare. Collective application should be initiated at appropriate altitude and groundspeed.

9.1.3 Low Rpm Recovery

Should the terrain preclude landing, execute a low rotor rpm recovery as follows: at 15 to 20 feet, crack the throttle open slightly, lower the nose toward the level attitude, and simultaneously increase the collective and smoothly rotate the twist grip to the full open position. Maintain a 5-foot air taxi. Do not allow N_r to decay below 90 percent.

WARNING

- Tail rotor effectiveness may be lost if N_r is allowed to decay below 80 percent.
- Rapid application of the twist grip to the full open position with N_r below 90 percent may induce loss of yaw control and tail rotor authority.

CAUTION

Exercise extreme caution to avoid exceeding torque limitations.

9.1.4 Instrument Autorotation

After a normal autorotative entry, adjust the collective to maintain N_r between 90 to 107 percent. Nose attitude should be adjusted to maintain 60 KIAS. Turn in the direction of the last known wind. Check N_g at flight idle rpm. At 250 feet above the assigned recovery altitude, assume a wings-level attitude. Check collective full down at 150 feet above the assigned recovery altitude and assume an 8°- to 10°-noseup attitude on the attitude gyro. When established in the flare, smoothly rotate the twist grip to the full open position and ensure N_f and N_r are married. At 75 feet above the assigned recovery altitude, coordinate up collective and forward cyclic to complete recovery at the assigned recovery altitude with 40 KIAS. The recovery altitude shall not be lower than 1,000 feet MSL (Mean Sea Level).

9.2 SIMULATED ENGINE FAILURES

9.2.1 Hover

From a normal hover, reduce the twist grip to FLT IDLE, ensuring that collective is not inadvertently raised or lowered. Use sufficient pedals and cyclic to maintain heading and ensure a vertical descent. The helicopter will tend to maintain altitude momentarily, then will settle. Nearing the ground, apply up collective to cushion the landing. After the helicopter is firmly on the deck, lower the collective to the full down position and smoothly rotate the twist grip to full open after waiting 15 seconds.

9.2.2 Air Taxi

This maneuver is performed in the same manner as a simulated engine failure in a hover, except the forward motion of the air taxi necessitates that the skids be aligned for a smooth run-on.

CAUTION

- These maneuvers should only be practiced at a moderate gross weight. At higher gross weights, greater skill and training are required to cushion the landing and there is a greater possibility of structural damage to the helicopter.
- To prevent compressor stall, stabilize the N_g at flight idle for a minimum of 15 seconds with the collective full down. Neutralize the directional control pedals and, after the N_f/N_r has stabilized at approximately 60 to 65 percent, slowly open the twist grip to the full open position (do not exceed 40 percent torque).
- After 15 seconds, if N_r has not stabilized above 60 percent a slight increase of twist grip is necessary. Utilize enough twist grip to increase N_r above 60 percent. A MAF should be initiated upon completion of flight.

9.3 FORMATION FLIGHT

9.3.1 Introduction

It is essential that the basic fundamentals of formation flying be practiced in preparation for combat readiness. The procedures and positions contained herein are intended to provide a foundation for formation flying that will meet most mission requirements.

The signal for a change in a formation may be accomplished by the use of the radio on a squadron common frequency or appropriate hand signals as contained in the current edition of NWP 41.

In any case, no changes in the formation will take place until all aircraft in the formation understand and acknowledge the signal.

9.3.2 Elements of a Formation

The number of aircraft required to accomplish a mission varies. A section will consist of two aircraft, and a division will consist of three or four aircraft (two sections). Two or more divisions constitute a flight. The disposition of members within a formation is at the discretion of the leader.

9.3.3 Basic Formations

The two basic types of formations are parade and tactical. Parade is used primarily when there is a requirement for aircraft to fly a fixed bearing position in close proximity to each other and maximum maneuverability is not essential. It is most frequently employed during arrival at, or departure from ships, or airfields or during flight demonstrations. Power is varied to maintain position. Tactical is used when maneuverability is a prime consideration, such as

formations engaged in combat. The leader must be able to use his formation as an integral unit and still be free to turn, climb, and dive the formation with few restrictions. The tactical formations outlined herein afford this flexibility. Radius of turn is varied rather than power to maintain position.

9.3.3.1 Parade Formation

9.3.3.1.1 Position

The parade position is on the 45° bearing either side of the lead axis with 10 feet of step-up and a minimum of one rotor diameter diagonal clearance between rotor tips. This position provides adequate longitudinal and lateral clearance between rotor tips. This position provides adequate longitudinal and lateral clearance between aircraft.

9.3.3.1.2 Parade Turns

Wingmen will rotate about the leader's longitudinal axis during a turn into them and on their own longitudinal axis on turns away from them. Power is varied to maintain position on the leader.

9.3.3.2 Tactical Formations

The two types of tactical formation are cruise (Figure 9-3) and combat cruise.

9.3.3.2.1 Cruise

The cruise position is on a 30° bearing off the tail with 10 feet of step-up and a minimum of three rotor diameters diagonal clearance between blade tips. This position will provide adequate longitudinal and lateral clearance between aircraft for maximum maneuverability. Number three will fly a position to allow room for number two between himself and the leader. When the leader initiates a turn, aircraft will maintain longitudinal clearance on the aircraft directly ahead by sliding and utilizing the radius of turn created by the leader. To decrease distance, increase bank; to increase distance, decrease bank. As soon as the leader rolls level, the normal cruise position will be resumed with the number 2 aircraft balancing the formation.

9.3.3.2.2 Combat Cruise

Combat cruise affords the formation increased flexibility by releasing the wingman from a fixed position. It enables all flight members to concentrate on terrain flight, map reading, and enemy detection and avoidance. There is no fixed position in combat cruise, but limits are defined for the relative position of the wingman. Combat cruise allows the wingman to fly anywhere on an arc from 10° forward of the abeam on the left to 10° forward of the abeam on the right. The optimum wingman position is on the 45° bearing with four or five rotor diameters of lateral separation and level with the lead aircraft. Prolonged flight in the area within 30° of the tail (blind spot) should be avoided.

9.3.3.3 Crossovers

Crossovers will be accomplished by individual wingmen or sections when directed by the leader. The leader must ensure all helicopters in his formation are aware of the change in formation. The following procedures will be followed:

1. When a wingman is required to cross over, he will move to the corresponding position on the opposite side, maintaining constant longitudinal blade tip clearance. The section leader will slide out on the bearing, allowing room for the number 2 aircraft when applicable.
2. When the section is required to cross over, it shall be accomplished by the section moving across to the appropriate position on the opposite side. The section leader wingman will not effect his crossover on the section leader until the section leader is in his new position.

9.3.3.4 Lead Changes

All changes of the lead position in a formation shall be acknowledged by the recipient in such a manner as to preclude the possibility of misunderstanding by any member of the formation. A lead change should be executed from level flight and in such a manner as to allow the old leader time to assume his new position before maneuver flight is commenced. As soon as the wingman acknowledges receiving the lead, the old leader will be responsible for aircraft separation. A minimum of two rotor diameters clearance shall be maintained throughout the maneuver.

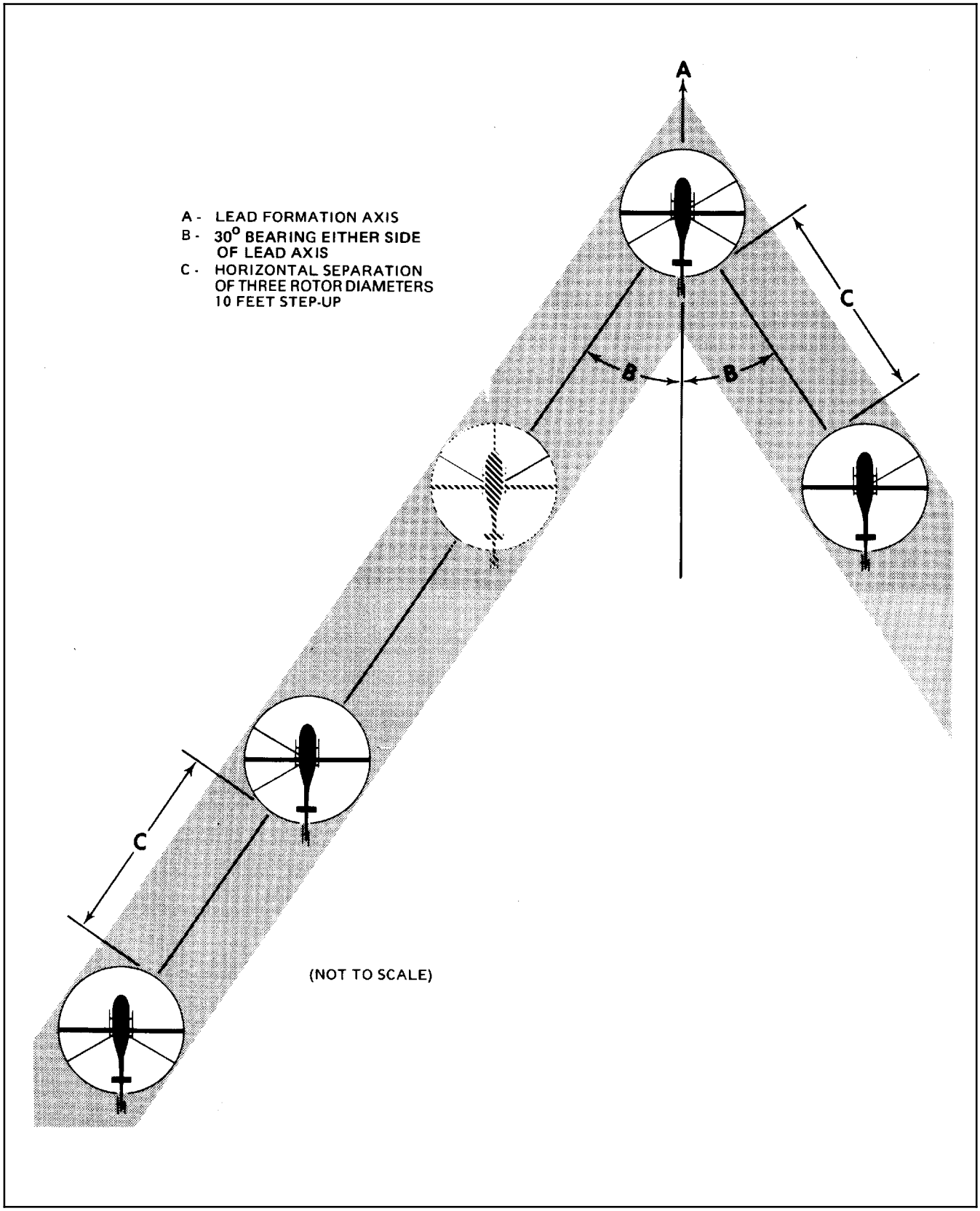

Figure 9-3. Four-Plane Division Cruise

9.3.4 Rendezvous

The two types of basic rendezvous are the running rendezvous and the carrier-type rendezvous. A combination of the principles of these two is most commonly employed to join aircraft after takeoff.

9.3.4.1 Running Rendezvous

The leader will depart maintaining a prebriefed airspeed and will allow wingmen to use an airspeed differential and/or radius of turn that will enable them to overtake the leader and join as briefed.

9.3.4.2 Carrier-Type Rendezvous

Basically this is a joinup executed while the division leader makes a 180° level turn, using a 10° to 15° angle of bank and 80 KIAS. Joining helicopters will assume a rendezvous bearing on the division leader using the cutoff vector to effect the joinup. The final phase of the rendezvous will be on a 45° rendezvous bearing. Joinups will be made to the inside of the turn. After relative motion is stopped, cross over as necessary. When practicing carrier-type rendezvous, breakups will be executed from an echelon. The leader will break maintaining altitude and a 30° bank throughout his turn. Each succeeding wingman breaks at a prebriefed interval with 30° of bank, adjusting his bank to be in an extended column position when the leader completes his turn.

9.3.5 Formation Takeoffs and Landings

Formation takeoffs and landings are frequently used during normal missions and should be practiced.

Power available, size of the zone, obstacles to flight, wind direction and velocity, terrain features, rotor turbulence, and other considerations will determine the position to be assumed by members of a formation.

9.3.6 Responsibilities

Section and division leaders must fly as smoothly and as steadily as possible, maintaining constant altitudes, headings, and power settings. Section and division leaders are responsible for maintaining positions within the formation as instructed. The leader is responsible for briefing, conduct, and discipline of the flight. He normally handles radio transmissions for the flight, including takeoff and landing clearances. All section leaders must be prepared to assume the lead of the division.

9.4 TACTICAL OPERATIONS

To survive in a threat environment, the helicopter pilot must be able to operate to avoid enemy detection. The pilot must learn to avoid enemy fields of fire to minimize the small-arms threat and to understand and use terrain masking techniques and various flight modes to counter an enemy threat.

9.4.1 Tactical Maneuvers

9.4.1.1 Quick Stop

The quick stop should be practiced to enable the pilot to develop the control coordination required to decelerate the helicopter rapidly without placing it in an unsafe envelope. This maneuver should be performed with the helicopter stabilized at 100 KIAS and 50 feet AGL. Smoothly lower the collective while simultaneously applying aft cyclic to slow the airspeed, while maintaining a constant altitude. The maneuver is terminated at 45 KIAS, at which point the pilot should adjust the collective and cyclic to establish a normal climbout.

9.4.1.2 High-Speed Approach

The high-speed approach is practiced to enable the pilot to decelerate rapidly from forward flight to a landing. This maneuver should be performed with the helicopter stabilized at 100 KIAS and 50 feet AGL. The quick stop technique is employed to transition to a landing. When slowed to 15 to 20 knots groundspeed, the helicopter is flown to intercept the steep approach final. This maneuver may be terminated in a hover or a no-hover landing.

9.4.2 Tactical Approaches

9.4.2.1 360° Overhead Approach

At the initial approach point, turn to the final approach course, utilizing the landing zone as the navigation key. It is important that the helicopter be properly established directly over the intended point of landing at the beginning

of the maneuver. From a pattern altitude and airspeed of 100 feet AGL and 80 KIAS, commence a smooth coordinated turn utilizing 30° to 60° angle of bank to arrive at the abeam position (700 to 1,000 feet abeam) with 100 feet AGL and 80 KIAS. From the abeam position, continue the turn and begin to decelerate to arrive at the 90° position with 100 feet AGL and 70 KIAS. From the 90° position, continue the decelerating turn to intercept the course line with 100 feet AGL, 45 to 65 KIAS, and 400 to 600 feet of straightaway. Follow the glideslope and rate of closure, similar to the normal approach, to the intended point of landing. The maneuver may be terminated in a hover or a no-hover landing.

9.5 UNAIDED NIGHT OPERATIONS

The procedures for night flying will be essentially the same as those for day flying; however, visual reference and depth perception are reduced.

WARNING

Pilots should adapt to night vision prior to any night operations.

9.6 NIGHT VISION DEVICE UTILIZATION

9.6.1 General

Night vision devices provide a significant increase in the visual cues and situational awareness during night operations while greatly expanding operational capabilities. If effectively employed, NVDs minimize enemy threat capabilities and reduce the probability of detection by visual or electro-optic means; however, the benefits of NVDs are only maximized through training, mission planning, and proper crew resource management. Competency on NVDs begins with a firm foundation in the execution of basic pilotage skills; the importance of good crew resource management cannot be overemphasized. For additional information on NVDs and their usage, refer to your CNATRA NVD Flight Training Instruction or the MAWTS-1 NVD manual.

WARNING

Do not assume personnel operating in and around taxiing helicopters are capable of detecting hazards with the same level of situational awareness as can be attained with NVDs.

9.6.2 NVD Physiology

Flying with NVDs has a significant impact on physiology. The most obvious visual limitation of NVDs is the reduced Field Of View (FOV). Compared to the 188 degree FOV normally available, NVD FOV is reduced to 40 degrees. This reduction necessitates an active and aggressive scan. Additionally, a reduction in visual acuity (resolution) occurs with NVDs. As a result, the ability to perceive fine details such as power lines, unlighted towers, poles, and antennas is significantly degraded. Haze, smoke, low light levels due to overcast conditions, or lack of reflected cultural lighting can diminish the effectiveness of NVDs.

WARNING

Depth perception is adversely affected by NVDs. Closure on objects and other aircraft, or descents toward the ground, may not be immediately noticeable.

Wearing NVDs for an extended period of time can cause extreme eye fatigue, which can result in converging/diverging vision, headaches, and eye strain. Proper NVD preflight and adjustment procedures are critical. Improper focus procedures will compound the adverse affects of NVDs. Proper NVD adjustment and focus procedures shall be conducted before flight.

9.6.3 NVD Operations

The procedures for NVD flying will essentially be the same as those for day and unaided night flying. Naval Air Training Command flights shall refer to applicable flight training instructions and Standard Operating Procedures (SOPs). The minimum equipment for NVD operation shall be the same as required for night flight in paragraph 4.21, with the additional requirement of NVD-compatible cockpit lighting. Each crewmember shall have a working set of authorized NVDs.

9.6.4 NVD Crew Brief

The NVD Briefing Guide provided should be used during mission planning and briefing. It should be noted that even the most basic NVD mission requires a thorough brief. Your individual NATOPS or tactical mission briefing guide and the enclosed NVD Briefing Guide can be combined to ensure compliance with NATOPS, minimize redundancy, and maintain a logical flow of information. NVD-aided operations require planning and briefing for several additional safety of flight considerations. The emergency procedures section of your NATOPS brief will require added detail to cover the necessary NVD crew resource management considerations.

9.6.5 NVD Briefing Guide

1. Solar/lunar considerations.
   a. Sunrise/sunset — EENT.
   b. Moonrise/moonset — Lux/luminance levels.
   c. Moon angle/azimuth.
   d. Shadowing.
   e. Ambient light.
   f. Visual illusions.
2. NVD preflight.
3. Goggle/degoggle procedures.
4. Internal/external aircraft lighting.
   a. Anticollision light.
   b. Navigation lights.
   c. Use of searchlight/infrared.
   d. Internal aircraft lighting.
   e. Map light/lip light.
5. Radar altimeter.
6. Hazards.
7. LZ operations.
8. NVD emergencies.

CHAPTER 10

Functional Checkflight Procedures

10.1 GENERAL

The information contained in this chapter is not intended for general dissemination to all pilots and aircrew. These procedures are intended for use by designated functional checkflight pilots and are not to be used as troubleshooting procedures. The checkflight procedures listed herein are promulgated to standardize the conduct of ground and flight checks of the TH–57B/C helicopter. The functional check pilot and quality assurance representative are responsible to ensure applicable steps are checked fully.

Functional checkflights are required to determine whether the airframe, powerplant, accessories, and other items of equipment are functioning in accordance with predetermined standards while subjected to the intended operating environment.

Checkflights shall be conducted within autorotative distance of a landing field when feasible and shall be accomplished under daylight VMC conditions unless otherwise authorized. The appropriate authority may also authorize functional checkflights to be accomplished in combination with operational flight. This procedure will be allowed provided the operational portion is not conducted until the checkflight requirements have been completed satisfactorily by a designated functional check pilot and properly entered on a checkflight checklist.

During all functional groundchecks, the pilot seat shall be occupied by a designated functional check pilot or a pilot who has completed the appropriate ground training syllabus and has been authorized in writing by the appropriate authority to conduct maintenance ground turns. All personnel in the helicopter shall be strapped in securely during start and shutdown sequence. Further, no personnel shall pass beneath the rotor arc without functional check pilot approval.

During all functional checkflights, a designated functional check pilot shall be at the controls. Observers qualified in accordance with Chapter 5 of this manual may occupy the copilot seat when desired for assistance in data recording and airborne troubleshooting of discrepancies. The functional checkflight shall be flown with the minimum crew necessary.

10.1.1 Check Pilot Qualification

The following shall be considered minimum functional qualification requirements:

1. Completing a locally prepared ground training syllabus for prospective check pilots.

2. Reading a designated list of required materials that shall include pertinent sections of applicable maintenance manuals, engine bulletins, airframe bulletins, and other such materials as may be required by local instructions.

3. Completing a functional check pilot ground and flight check syllabus that shall be conducted by a designated representative in accordance with local instruction.

4. Being designated in writing as a functional check pilot or turn pilot by the appropriate authority.

10.1.2 Conditions Requiring Functional Checkflights

Checkflights shall be conducted upon completion of all necessary groundchecks and prior to releasing an aircraft for operational or training flights. The following profiles are general divisions of aircraft maintenance. It is not required

to complete all steps in any one profile if the steps are not applicable. The functional check pilot and quality assurance are responsible to ensure all applicable steps are checked fully.

The following conditions require checkflights:

1. At the completion of all 100–hour inspections or prior to acceptance and/or transfer of any helicopter, complete checkflight items prefixed by the letter A.
2. Whenever the helicopter has been rerigged, the rotor blades have been changed, or any flight controls or flight surfaces have been replaced or removed and reinstalled, complete checkflight items prefixed by the letter B.
3. After any engine change or removal and reinstallation or after any rerigging of engine controls, complete checkflight items prefixed by the letter C.
4. Gearbox serviceability and/or operational functional checks shall be performed as required in the applicable maintenance manuals. Complete those items prefixed by the letter D when they apply.

10.2 PROCEDURES

The following items provide detailed description of the functional checks. They are sequenced in the order in which they should be performed. In order to complete the required checks in the most efficient manner and the most logical order, a flight profile (Figure 10-1) has been established for each checkflight condition and prefixed by the letter(s) corresponding to the purpose(s) for which the checkflight is being flown (i.e., A through D in the preceding subpart). The applicable letter identifying the profile condition precedes each check in both the following text and in the Functional Checkflight Checklist (NAVAIR 01–H57BC–1F). Checkflight personnel shall familiarize themselves with these requirements prior to each flight. NATOPS procedures shall apply during the entire checklist unless specific deviation is required by the functional check to record data or to ensure proper operation within the approved aircraft flight envelope. A daily inspection and a flight briefing by maintenance control personnel in accordance with OPNAVINST 4790.2 series are required prior to each checkflight. The functional checkflight does not relieve the check pilot of the responsibility of giving a NATOPS crew brief prior to the actual checkflight.

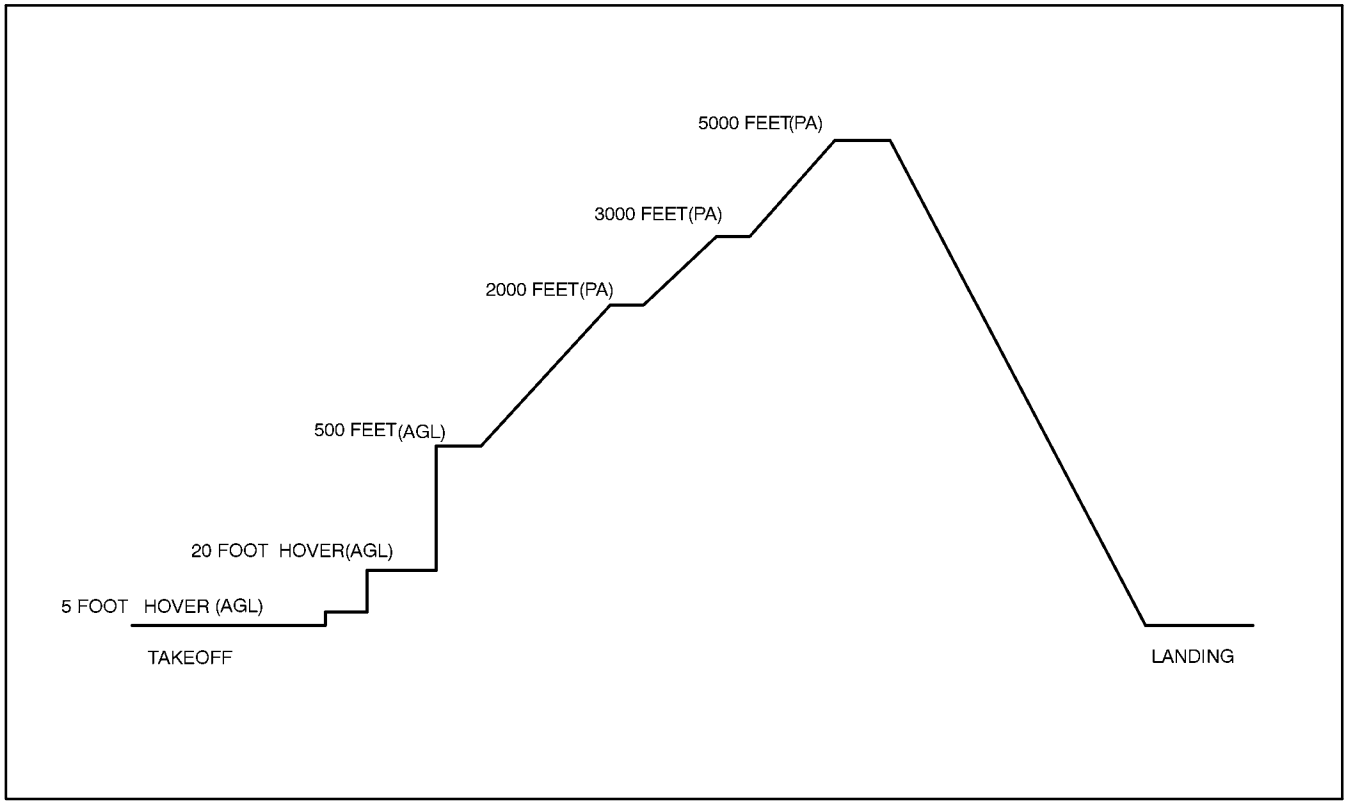

Figure 10-1. Functional Checkflight Flight Profile

PROFILE

10.3 GROUNDCHECKS

A B C D

1. Preflight inspection.

Perform the preflight inspection in accordance with this manual and applicable maintenance directives. The functional check pilot shall approach preflight inspections differently from the non–maintenance pilot because the functional check pilot is inspecting work that directly affects safety of flight; much closer scrutiny must be exercised during preflight inspections. Pay particular attention to those items repaired, adjusted, reworked, and replaced. Ensure all bolts, nuts, cotter pins, safety wire, structural panels, and cowling sections are securely in place. Note and record all discrepancies.

WARNING

If dynamic tracking/balancing equipment is installed, ensure it is securely in place and properly positioned. Rotate main rotor blades through 360º and ensure proper control clearance for all equipment.

Note

If checkflight is to include complete dynamic balancing or flag tracking of main rotor, ensure blade trim tabs are set at trail and main rotor pitch control rods are preset to proper length.

In addition to the normal NATOPS preflight, check the following items:

A

a. Standby compass(es) for discoloration and full of fluid.

A

b. Turn and slip indicators — Full of fluid, no bubbles, and needles centered. Check that turn ball is centered with helicopter in a level condition.

A B C D

c. (I)VSI needle(s) to 0.

A B C D

d. All instruments having proper range marks.

A B C D

e. OAT gauge — Check for accurate reading.

A C

f. Throttle rigging — Check throttle rigging in accordance with applicable maintenance instructions.

g. BAT — ON.

A B C D

h. Fuel shutoff valve.

With caution light circuit breaker out, cycle fuel valve switch and listen for audible opening and closing of valve. With switch on and boost pumps operating, fuel pressure should be indicating 4 to 30 psi.

i. Interior and exterior lights.

PROFILE	
A C	j. Governor rigging. (1) Rpm — INC to maximum. (2) Collective — Full up. (3) Check that the governor arm has a minimum of .010–inch clearance from the maximum stop screw after final governor setting. (4) Rpm — DECR to minimum. (5) Collective — Full down. (6) Check that the governor arm has a minimum of .010–inch clearance from the minimum stop screw after final governor setting.
A B C D	k. BAT — OFF.
A B C D	l. Air–conditioner compressor pulley check — Turn the rotorhead while checking for air–conditioner compressor belt slippage. **CAUTION** Ensure fingers are clear of the belt, pulley and compressor during this check.
A B	m. Slider bearing. (1) Collective — Full up. (2) Cyclic — Full forward. (3) Check — Stationary swashplate is not contacting mast at slider bearing housing.
A B	n. Collective lever assembly. Check the word “TOP” is on the upper side and collective lever does not bottom out on the support assembly.
A B	o. Butt end tension–torsion straps. Cycle the collective full travel and check for any movement of the inboard ends of the straps. Any movement is unsatisfactory, as it is indicative of an improper pinch fit.
A B	p. Rotor brake — Pull full down and observe pressure indicating 100 to 170 psi. Secure rotor brake and observe pressure indicator needle against peg.
A B C D	2. Prestart and Start checklists. Complete normal NATOPS Prestart and Start checklists and observe the following items:
A C	a. Start fuel. Observe starter limits maintained; light–off is smooth, fuel rescheduling is obtained between 28 to 32 percent N_g (indicated by N_g speed increase/TOT increase), and starter releases when switch released at 58 to 60 percent N_g. **CAUTION** Abort start if positive indication of transmission oil pressure is not received by 25 to 30 percent N_r.

PROFILE

b. Engine–out warning system.

Record N_g at which engine–out warning system deactivates (55 ±3 percent N_g).

CAUTION

Secure engine if engine oil pressure fails to reach 50 psi by the time engine reaches flight idle.

Note

During cold–weather operations, engine oil pressure may exceed 130 psi on start. Operate engine at flight idle until engine oil pressure is 50 to 130 psi.

c. Start sequence time.

Record total elapsed time from initial starter engagement to flight idle (59 percent N_g minimum).

d. Flight idle speed.

The engine should idle between 59 to 65 percent N_g. If idle is not within this range, make a rough idle adjustment before proceeding.

A B C D

3. Pretakeoff Checklist.

CAUTION

Ensure transmission oil temperature is at least 15 °C, transmission oil pressure is 50 psi or below, and engine oil pressure is below 130 psi before accelerating the engine above flight idle.

Note

The following checks shall be done at 70 percent N_g.

(C) a. NON ESS NORMAL/RECOVER — Normal.

b. Off flags for attitude and directional gyros have retracted.

A B C D

c. Flight control checks — The following checks shall be accomplished at 70 percent N_g with control frictions set at the point of least resistance.

(1) Cyclic force trim operation.

(a) FT switch — ON.

(b) Pilot cyclic FORCE TRIM button.

Depress cyclic FORCE TRIM button and check that force trim pressure is disengaged from the cyclic as long as button is depressed. Release FORCE TRIM button and move cyclic in all quadrants against trim pressure. Cyclic should return to pretrimmed position when control pressures are relaxed.

PROFILE	
	(c) Copilot cyclic FORCE TRIM button. Check copilot button using the same procedures followed for pilot button in step (b).
	(2) Pedal force trim operation.
	(a) FT — ON.
	(b) Depress both pedals simultaneously and gently move the pedals to ensure the pressure switch has nulled the trim — Check.
	(c) Reposition both pedals to an offset position.
	(d) Gently pull forward pedal aft, release it, and ensure it returns to the trimmed position.
	(e) Retrim pedals in opposite positions and repeat steps (2)(c) and (2)(d).
	(f) FT — OFF.
A B C D	(3) Motoring servo check. Check for internal servo leakage by accelerating cyclic gently in each cardinal direction and noting that motion stops when acceleration is stopped.
A B C D	(4) Hydraulic system off check.
	(a) Hydraulic system switch — OFF.
	(b) Ensure HYD PRESS caution light on.
	(c) Check for freedom of movement in controls. There should be no excessive coupling or control feedback.
	(d) HYD BOOST circuit breaker — Pull.
	(e) HYD PRESS caution light should go off and controls should return to normal boosted operation.
	(f) HYD BOOST circuit breaker — In.
	(g) Hydraulic system — ON.
A C	d. Engine anti–ice — ON. Observe a 10º to 15 ºC rise in TOT.
A C	e. Engine anti–ice — OFF. Observe a 1º to 10 ºC drop in TOT. Reengage if engine washed.
A C	f. Air–conditioner and heater checks.
	(1) Heater rheostat — Rotate to closed position.
	(2) AIR COND switch — Select AIR COND.
	(3) Fan speed — Check both positions working.

PROFILE

(4) MIN/MAX rheostat — Rotate to MAX position and open all air ducts.

(5) After cabin has cooled, rotate MIN/MAX rheostat to MIN position and note a reduction in coolness of the air.

(6) With air–conditioner on and at the MIN position, rotate the heater rheostat to forward full on position and note the temperature of the air increasing.

(7) AIR COND switch to FAN.

(8) Observe warm air from air ducts.

(9) Heater rheostat — Closed position.

CAUTION

Use of the MAX HEATING switch position should only be used in ambient temperatures of less than 12 °C. Selection of MAX HEATING turns off the cooling fan. Operation in this mode at ambient temperatures above 12 °C will result in damage to the turbomachinery.

A C

g. Pitot heat.

(1) Have plane captain touch tube lightly.

(2) PITOT HEAT — ON.

(3) When warming of tube is noted, turn switch off.

WARNING

Gripping a hot pitot tube firmly will cause serious burns.

A B C

h. Twist grip — Open (do not exceed 40 percent torque).

CAUTION

Open twist grip to flight position. Twist grip should accelerate smoothly and easily without binding.

A B C

i. Rpm — INC to 100 percent N_f.

(C)

(1) Voltmeter checks:

(a) Dc voltmeter — Check.

1) ESS 1 BUS VOLT — -1 ±0.5 Vdc less than that of the main generator setting.

2) ESS 2 BUS VOLT — -1 ±0.5 Vdc less than that of the main generator setting.

3) NON ESS BUS VOLT — Approximately the same as the main generator setting.

PROFILE

(b) Ac voltmeter — Check on any bus selector indicating 115 ±4 Vac.

(c) Ac voltmeter — FCS INV V indicates 115 ±4 Vac.

(d) MAIN GEN FIELD circuit breaker — Pull.

1) Check BUS TIE RELAY circuit breaker automatically trips.

2) Check MAIN GEN FAIL caution light illuminated and loadmeter indicates 0 amps.

3) Check FUEL PUMP caution light illuminated and fuel pressure normal.

(e) Dc voltmeter — Check.

1) NON ESS BUS VOLT — 0 Vdc.

2) ESS 2 BUS VOLT — Approximately 24 Vdc or same as main battery.

3) ESS 1 BUS VOLT — Approximately the same as the STBY generator.

4) STBY GEN — Approximately 27 Vdc.

5) MAIN GEN — 0 Vdc.

(f) NON ESS NORMAL/RECOVER — RECOVER.

(g) NON ESS BUS VOLT — Approximately 24 Vdc or same as main battery.

(h) NON ESS NORMAL/RECOVER — NORMAL.

(i) BAT — OFF.

(j) Dc voltmeter — Check.

1) STBY BATT light — ON.

2) ESS 1 BUS VOLT — Approximately the same as STBY generator.

3) ESS 2 BUS VOLT — 0 Vdc.

4) NON ESS BUS VOLT — 0 Vdc.

(k) STBY GEN — OFF.

(l) ESS 1 BUS VOLT — 0 Vdc.

(m) Standby attitude indicator — Check. Confirm emergency operation of pilot attitude indicator by noting failure flag remains withdrawn.

(n) BAT — ON.

1) MAIN GEN FAIL caution light check — Check on.

2) STBY GEN FAIL caution light check — Check on.

3) FUEL PUMP caution light — Check on.

(o) MAIN GEN FIELD circuit breaker — In.

(p) MAIN GEN — Reset, then ON. Check MAIN GEN FAIL caution light out.

PROFILE

(q) BAT — OFF.

(r) Dc voltmeter — Check.

1) ESS 1 BUS VOLT — Approximately 1 Vdc less than that of the main generator.

2) ESS 2 BUS VOLT — Approximately 1 Vdc less than that of the main generator.

3) STBY GEN — 0 Vdc.

4) MAIN BAT — 0 Vdc.

(s) BAT — ON.

(t) STBY GEN — ON. Check STBY GEN FAIL caution light no longer illuminated.

(u) BUS TIE RELAY circuit breaker — In.

(v) Caution and warning lights — No longer illuminated.

j. Torque — Check.

Record torque; it should be approximately 30 percent at 100 percent N_f flat pitch.

A B C

k. Fuel boost pumps.

(1) Pull both circuit breakers.

(2) Ensure fuel boost light illuminated.

(3) Keep both circuit breakers out for at least 1 minute.

(4) Reduce twist grip to FLT IDLE and run for 30 seconds to check for cavitation or air leaks.

(5) Circuit breakers — Reset.

l. Crew and accessory panels secured.

4. Hydraulics Check — Perform.

5. Takeoff Checklist.

a. Complete normal NATOPS Takeoff checklist.

10.4 HOVER CHECKS

A B C D

6. Initial takeoff.

WARNING

Failure to accomplish initial takeoff slowly, to feel for proper rigging, control response, abnormal vibrations, and cg limits, could lead to loss of controllability/out of control flight and possible loss of aircraft.

PROFILE

A B

a. Rigging.

(1) Cyclic.

Note any off-center condition as a check of swashplate rigging. Any abnormal cyclic position requires a rigging check.

(2) Pedals.

Ensure excessive left or right pedal is not required. Any abnormal pedal position requires a rigging check.

(3) Collective.

Note any abnormal collective position.

(4) Copilot controls.

Copilot cyclic and collective should be positioned same as pilot. Left pedal may be slightly forward of pilot.

b. Taxi.

(1) Ensure no abnormal control responses exist.

(2) Ensure proper operation of turn/ball, attitude gyro, directional gyro, and IVSI during taxi.

7. Hover stability.

WARNING

If any lack of response or dead spots are felt, terminate flight until cause can be located and corrected.

a. Collective.

Make small increases and decreases in collective and note immediate helicopter response.

b. Cyclic.

Make small cyclic movements and observe tip-path plane changes followed by fuselage attitude changes.

c. Pedals.

Make small pedal movements and note immediate heading changes.

d. Coupling.

With control boost ON, almost no cyclic-collective coupling should be noted.

e. FORCE TRIM — OFF.

f. Pedal creep.

Release pedals. Pedals should not creep in either direction. Helicopters without yaw trim will exhibit some pedal creep.

PROFILE

8. Cyclic servo actuator check.

   a. FORCE TRIM — OFF.

   b. Rate limiting.

      Actuate cyclic smoothly at a moderate rate, approximately 6 inches either side of center, from left-rear to right-front and from right-rear to left-front at 1:1 main rotor frequency. The Hydraulic Pressure light should not illuminate during this maneuver. If any rate limiting is noticed, respective servo may need replacement.

Note

Rapid control inputs will cause the hydraulic pressure light to illuminate momentarily.

A B

9. Isolation mount check.

   a. Establish helicopter in a 5-foot hover.

      (1) Move cyclic fore and aft approximately 3 to 4 inches fairly rapidly to induce an extremely low-frequency vibration.

      (2) Stop the cyclic in the neutral position.

      (3) Check that the vibrations start to dampen out after 3 to 5 cycles.

10. Hovering autorotation.

CAUTION

- Avoid holding collective up for prolonged periods while completing this check. Avoid continuous operation in 50 to 60 percent N_r range, as isolation mount damage is possible.
- To prevent compressor stall, stabilize the N_g at flight idle for a minimum of 15 seconds with the collective full down. Neutralize the directional control pedals and, after the N_f/N_r has stabilized at approximately 60 to 65 percent, slowly open the twist grip to the full open position (do not exceed 40 percent torque).
- After 15 seconds, if N_r has not stabilized above 60 percent a slight increase of twist grip is necessary. Utilize enough twist grip to increase N_r above 60 percent. A MAF should be initiated upon completion of flight.

PROFILE

a. Establish a 5-foot hover, execute a hovering autorotation, and note the following:

(1) TRANS OIL PRESS caution light on at 30 ±2 psi.

(2) Maintenance of hydraulic boost at low N_r.

(3) Maintenance of flight idle N_g (N_g not dragged down by collective application).

(4) No binding or hard spots in upper portion of collective travel (pull collective to upper stop).

(5) Twist grip — Open.

(6) TRANS OIL PRESS caution light — OFF by 36 psi.

(C) A B C D

11. Stabilization check.

a. STAB — OFF.

b. Observe magnitude of pilot cyclic inputs at hover.

c. STAB — Engage while monitoring cyclic movements.

d. Magnitude of inputs should be noticeably reduced.

e. Cyclic FORCE TRIM — Press and hold.

f. FT switch — Engage.

g. Stabilize hover and release FORCE TRIM switch. Cyclic attitude should hold with no roll or pitch changes.

h. Repeat step g. until desired attitude is maintained for at least 10 to 15 seconds with no cyclic input by the pilot.

WARNING

Pilot should closely guard flight controls to prevent loss of control.

Note

Collective and pedals shall be flown manually.

(C) A B C D

12. Yaw stabilization check.

a. STAB — ON.

b. FT — ON.

c. Ensure pedals are set and trimmed (feet should be off pedals for this check, guard pedals as appropriate).

d. Maintain helicopter nose into relative wind. Increase collective slightly and then reduce to ensure yaw servo is able to hold aircraft heading within ±5°.

Note

Wind gusts will affect this check.

PROFILE

A B C D

13. Engine lag check.

    a. Collective.

       Make rapid power changes and note almost immediate engine response.

    b. Pedals.

       Make rapid heading changes at constant power and note engine responds without appreciable main rotor droop.

    c. Droop cam check.

       Ensure no more than 1 percent steady-state N_f droop exists between 100 percent N_f at flat pitch on deck and stable hover.

10.5 FLIGHT CHECKS

A B C D

14. Normal climb.

    Accelerate smoothly into a normal climb. Monitor all instruments for abnormal indications.

(C)

15. Altitude hold check.

    a. Establish 500 fpm climb.

    b. ALT hold — Engage. Helicopter should show positive attempt to level off and pitch actuator should move toward full deflection, at ±150 feet deviation, FCS light should illuminate, ALT hold disengage, and pitch needle should center.

    c. Repeat step b. in 500 fpm descent.

    d. Establish level flight at 70 KIAS, engage ALT HOLD.

    e. Decelerate aircraft while maintaining altitude. At approximately 50 ±10 KIAS, FCS light should illuminate and ALT HOLD disengage.

A B

16. Boost OFF cruise (70 KIAS).

WARNING

If any control problems occur when hydraulic boost is secured, turn boost back on and terminate flight.

    a. Assume level flight at minimum 500 feet AGL.

       (1) HYDRAULIC SYSTEM — OFF.

       (2) Control response.

           Ensure all controls are functioning properly from 15 to 75 percent torque. Controls should move freely without use of undue pressure. No excessive coupling should be noted. A boost-off landing may be executed.

PROFILE

(3) HYDRAULIC SYSTEM — ON.

(C) 17. Actuator position indicator checks.

a. ALT hold — OFF.

b. FT — ON.

c. Fly helicopter overriding force trim, check indicators to see that actuators are working around center. Perform right and left turns, climbs, and descents.

A B C D d. See that there is no attempt by yaw axis to maintain a heading after the pilot initially starts a gentle and moderate coordinated turn. There should be no more than one-quarter ball deflection.

18. 60-KIAS Autorotation.

a. Compute aircraft gross weight.

b. Enter 60-KIAS autorotation with collective full down and check the following:

(1) Controllability — Normal.

Note cyclic approximately neutral and free to move in all directions.

(2) Pedals — Ensure adequate right pedal is available.

(3) N_r — Calculate using Figure 10-2 (balanced flight).

Limitations are +2 to -0 of chart value. Minimum allowable N_r adjustment is set at 2,650 pounds to 94 percent N_r.

WARNING

If auto rpm cannot be maintained in this range, terminate the flight.

Note

Set auto rpm with minimum gross weight of 2,650 pounds.

(a) Vibration level — Check.

Note any lateral vibrations with changes in rpm.

(b) Landing — Execute a Power-On Mod Flare Recovery.

TH-57C

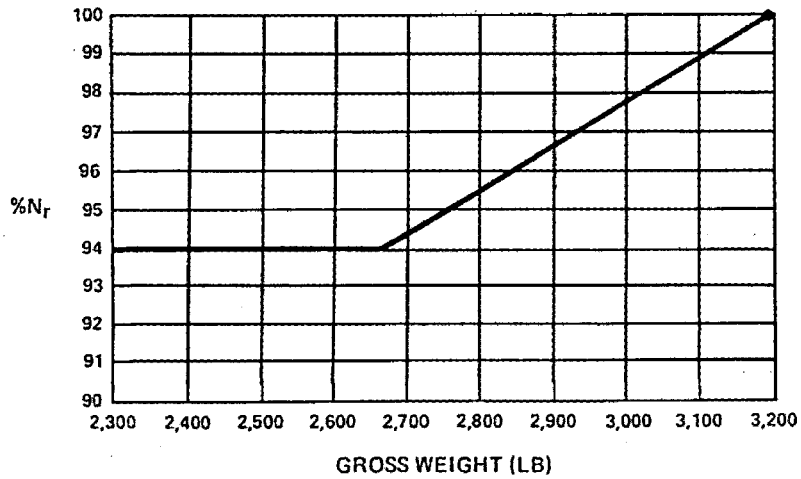

2300 LB = BASIC WEIGHT + 10 GAL JP-5 AT 6.8 LB/GAL + 1 PILOT AT 170 LB.

TH-57B

Limits are chart value up to +2 percent above

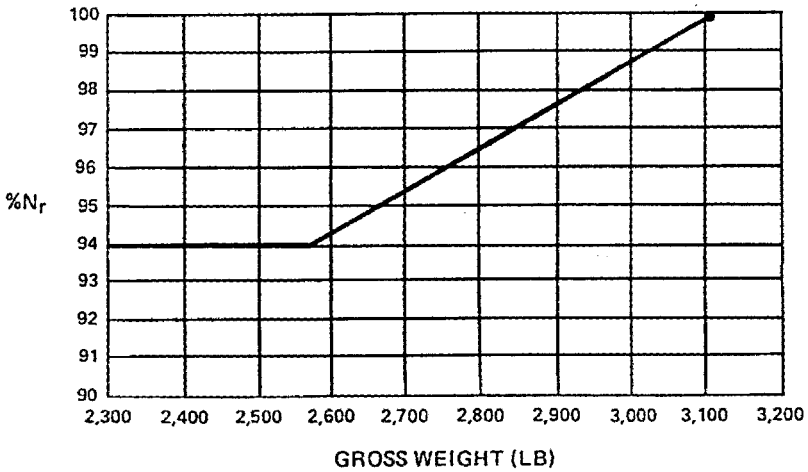

FUEL WEIGHT
(excludes first 10 gallons
JP-5 = 6.8 lb/gal):*

Gallons	Weight
85	510
80	476
75	442
70	408
65	374
60	340
55	306
50	272
45	238
40	204
35	170
30	136
25	102
20	68
15	34

To Compute Gross Weight: ADD 2100 + FUEL* +T/S + his toolbox.

2100 Pounds = Basic Weight + One Pilot at 170 Pounds + 10 Gallons of JP-5*
(*Fuel Weight chart is based on gauge reading; don't subtract 10)

Figure 10-2. Autorotational Rpm (N_r) Computation Chart

PROFILE

A B C D

19. Normal cruise.

a. Take off and establish level cruise at maximum continuous power.

(1) Pitch and roll.

Note control response to be normal.

(2) Pedal creep — Pedals should not creep in either direction.

(3) With FT ON, ensure cyclic remains in position when pilot relaxes pressure.

(C) (4) Repeat the process for pedal switch yaw STAB installed. Note control response to be normal.

A B C D

20. Maximum power check.

a. Compute the altitudes required and torque values before performing check.

Note

Refer to Bell maintenance manual for applicable engine performance charts.

b. With GEN — OFF, ENG ANTI-ICING — OFF, and ECS — OFF, execute a normal climbout. With sufficient altitude, establish a 52 KIAS climb with maximum power and note the following:

CAUTION

Maximum power is reached whenever N_g, TOT, or torque reaches system limit. In colder weather, N_g limit will normally be reached first. Do not exceed system limits.

(1) OAT.

(2) Pressure altitude.

(3) TOT.

(4) N_g.

(5) Torque.

PROFILE

(6) Droop — 2 percent maximum steady state N_f droop.

Note

- If maximum power cannot be achieved without exceeding droop limits, determine if engine fuel flow is limited by continued collective application. If N_g, TOT, or torque continue to climb, note that system is not fuel-flow limited.
- Accurate power checks may be accomplished by using the above procedure, by adding 2 percent to the chart percent torque reading. If that power check proves unacceptable, perform the maximum power check in a vertical climb with zero airspeed. More accurate checks are achieved above maximum continuous TOT. To avoid exceeding engine torque limits, this procedure will generally require a climb above 3,000 feet PA.

c. Controls — Note the cyclic and pedals are not abnormally displaced and control forces are not excessive.

d. Vibration — Note vibration level no greater than at cruise.

e. Collective — Reduce. Reduce collective gently to prevent overspeed.

f. GEN — ON.

A C 21. Check HSI and compasses for accuracy.

A B 22. Fast cruise.

CAUTION

Exercise caution to preclude overtorquing or overtemping the engine while performing this check.

a. FORCE TRIM — ON.

b. Obtain the maximum allowable or maximum attainable airspeed and note the following:

(1) Cyclic.

At least 1 inch of forward cyclic should be available before contacting the forward stop.

(2) Pedals.

Pedal should be near neutral. It is not abnormal for the right pedal to be approximately 1/2 inch forward of the left. It is also normal for the pilot right pedal to be farther forward than the copilot.

PROFILE

D

23. Dynamic tracking.

a. Main rotor track and balance.

Operate test equipment to obtain track and balance readings as per operating manual.

Note

If out-of-track condition is fairly constant at all airspeeds, pitch rod adjustment is indicated. If out-of-track condition occurs only at higher airspeed, tabbing is indicated.

A

24. Transponder.

a. Transponder — Contact appropriate controlling agency for transponder operations. Ensure ground facility receives identification signal.

b. Altitude reported is within 125 feet of corrected altimeter setting.

Note

If able, check steps 25. to 27.

(C) 25. Cruise check ALT hold.

a. Establish level cruise flight and check for proper operation.

Note

Heavy turbulence involving sustained vertical gusts may exceed the authority of the servos to maintain the selected altitude. This will be evidenced by the pitch servo indicator remaining at full deflection while altitude is deviating.

26. Ensure radar altimeter operating properly within 500 feet of the ground.

(C) 27. Integrated NAV system flight check (VOR, R-NAV, TACAN).

a. NAV units — ON. Select desired NAVAID.

b. VOR/LOC ident — Pull and check for ident tone.

Note

Push in dome button to receive identification signal.

c. Data input control — Adjust as desired.

d. Data button — Ensure proper operation of caret and input data as desired.

e. Press check button to obtain distance and radial from NAVAID.

f. Tune remaining NAV unit to a different frequency and check DME display does not change unless NAV units are reselected.

g. Function switch — As desired.

h. Verify accuracy of TACAN, VOR, ILS and ADF in flight using available NAVAIDs.

(1) Ensure proper needle operation.

(2) Ensure ILS marker beacon and aural visual units working properly.

(3) Check ILS glideslope and azimuth indicators working properly.

i. Select a waypoint and ensure proper operation of the RNAV.

PROFILE	
A B C D	28. Landing checks.
	a. Complete normal NATOPS landing checklist.
(C)	b. AFCS landing check.
	(1) Actuator position needles — Centered.
	(2) FCS mode — Select as desired.
A C	c. Preshutdown checks.
	(1) Governor range.
	(a) Ensure governor range is set 96 to 101 ±0.5 percent N_f.
	(2) Deceleration check.
	(a) ROTOR LOW RPM caution light and audio on at 90 ±3 percent.
	(b) Rpm — 100 percent N_f.
	(c) GEN — OFF.
	(d) Twist grip — Snap to idle.

Record time required for N_g to reach 65 percent. Deceleration should be smooth throughout range. Make separate deceleration checks using the pilot and copilot twist grips. The minimum allowable time is 2 seconds. No maximum time is prescribed; however, an upper limit of 10 to 15 seconds is suggested before additional troubleshooting is required. High deceleration time coupled with the tendency to overspeed and remain more than 15 seconds in an overspeeding condition when collective is reduced in flight usually indicates fuel control scheduling problems.

Note

Extrapolated deceleration times are not valid for temperatures above 27 °C.

A C	(3) Idle.

Record stabilized N_g, TOT, and T_q (Torque) at idle with GEN OFF. Adjust N_g as necessary to 59 to 65 percent.

A B C D	29. Engine secure and postflight.
	a. Complete the normal NATOPS engine shutdown checklist. Note the following:
	(1) Fuel cutoff — Depress idle detent, slowly move twist grip toward the off position. Twist grip marking should move through the idle detent with no change in N_g reading. Stop movement of the twist grip when the engine flames out. Measure fuel index needle movement from 30° marking on fuel control.
A C	(2) Engine-out system — On at approximately 55 ±3 percent N_g.

PROFILE

A B

(3) Flap restraints.

During shutdown, have plane captain signal when flap restraints seat. This should occur at 25 to 32 percent N_r.

Note

During the completion of the normal NATOPS postflight inspection, particular attention should be concentrated on the area(s) for which the helicopter was being checkflown.

PART IV

Flight Characteristics

Chapter 11 — Flight Characteristics

CHAPTER 11

Flight Characteristics

11.1 INTRODUCTION

The flight characteristics of this helicopter in general are similar to other single-rotor helicopters. The control system, with hydraulic servo assist, provides the pilot a near-zero force required for control movement; however, control feeling is induced into the cyclic stick and pedals by means of a forced trim system. To increase helicopter forward speed, simultaneously apply forward control stick and increase main rotor pitch; power is automatically adjusted to maintain constant rpm. Constant altitude is maintained throughout the entire range of forward flight speeds by fore and aft use of the cyclic control stick in coordination with power and main rotor pitch application. Direction and heading are controlled by the application of lateral cyclic control and the appropriate pedal input.

11.2 LEVEL FLIGHT CHARACTERISTICS AT VARIOUS SPEEDS

The TH-57 flight characteristics in level forward flight are normal at airspeeds above 20 knots. In forward flight, response to control movement is immediate and gives positive results. In flight at less than 20 knots, response to control movement increases and results in larger attitude changes for a given control movement. While hovering, it is possible to overcontrol with cyclic and cause excessive pitch oscillations. All hovering operations should be conducted at a minimum skid height of 5 feet, except during landing and takeoff.

11.3 MANEUVERING FLIGHT

Action and response of the controls during maneuvering flight is normal at all times when the helicopter is operated within the limitations set forth in this manual. The pilot should note that when percent N_g and percent torque are stabilized (collective position set such as for a cruise position), the percent N_g and percent torque will vary as cruise maneuvers are performed; however, the N_g and torque readings will return to the original setting when steady-state flight is reestablished. During hard turns, the pilot should be prepared to hold the collective up so that airframe vibration will not cause the collective to fall. Furthermore, the pilot should be aware that the angle of attack of the blades changes during cruise maneuvers even though the collective position is set. If the pilot adds collective during maneuvers, it is possible to exceed the percent N_g available and cause the N_f to droop after resuming a steady state of flight.

11.4 LOW-g MANEUVERING

TH-57 helicopters have a tendency to roll to the right when forward cyclic is used to initiate a lower-than-1g maneuver in forward flight. The reason for this low-g roll tendency is the thrust produced by the tail rotor. Because the tail rotor is above the helicopter center of gravity, the tail rotor thrust produces a right-roll tendency. During normal 1g flight, a portion of the main rotor thrust balances the tail rotor thrust and counteracts this right-roll tendency. During low-g flight, however, main rotor thrust is greatly reduced while the tail rotor thrust remains high; thus, a right roll can develop during low-g maneuvers. Instinctive pilot reaction is to correct the roll with left-lateral cyclic; however, because main rotor thrust has greatly been reduced, lateral cyclic effectiveness is also greatly reduced. Left cyclic application may also result in mast bumping. Aft cyclic will quickly increase rotor thrust (higher g) and will return lateral cyclic effectiveness.

Because of mission requirements, it may be necessary to lower the nose rapidly to acquire a target, stay on target, or recover from a pullup; however, at moderate to high airspeeds, fairly small, abrupt forward cyclic inputs can yield g levels near zero. The helicopter may roll to the right simultaneously with forward cyclic, the roll being greater as g levels approach zero. If an abrupt right roll should occur when rapidly lowering the nose, pull in aft cyclic to stop the roll and effect recovery. Left lateral cyclic will not effect recovery from a well-developed right roll during flight below 1g and may cause mast bumping. When it is necessary to lower the nose rapidly, it is essential that the pilot monitor changes in roll attitude as the cyclic is moved forward.

11.4.1 Recovery Procedure

See UNCOMMANDED RIGHT ROLL DURING FLIGHT BELOW 1g (paragraph 14.28).

11.5 MAST BUMPING

Mast bumping occurs when the rotor exceeds its critical flapping angle and the underside of the rotor hub contacts (bumps) the rotor mast. If contact is severe, mast deformation can occur and cause mast structural failure. Excessive rotor flapping can also cause rotor blade contact with the tailboom or cockpit. Mast bumping generally occurs at, but is not restricted to, the extremes of the operating envelope. The most influential causes are (in order of importance):

1. Low g maneuvers (below +0.5g).
2. Rapid large cyclic motion (especially forward cyclic).
3. Flight near longitudinal/lateral cg limits.
4. High-slope landings.

Less significant causes are maximum sideward/rearward flight, sideslip, and blade stall conditions.

WARNING

Should mast bumping occur in flight, catastrophic results are highly probable. Since conditions causing rotor flapping are cumulative, improper pilot response/recovery techniques to flight situations approaching or favorable to mast bumping can aggravate the situation and lead to in-flight mast bumping and mast separation.

Favorable conditions and recommended recovery procedures for mast bumping are provided in Figure 11-1.

CONDITION	RECOVERY TECHNIQUE
Start/Shutdown	Cyclic — Move to stop bumping. Emergency shutdown procedures — Complete.
During high-speed sideward or rearward flight	Cyclic — Immediately apply smoothly toward center. Pedals — Immediately apply as required to align the nose with the direction of travel.
During engine failure at high forward airspeed	Cyclic — Move aft to maintain positive g (thrust). Collective — As required to maintain N_r. Autorotation — Continue.
During low g maneuvers (below + 0.5g, other than nose high)	Cyclic — Aft, then center laterally to regain positive g (thrust) on the rotor and maintain N_r. Land immediately.
During nose high, low airspeed	Collective — Judiciously increase, if possible. Pedals — As required. Cyclic — Move to neutral position. Land immediately.
During slope landing	Cyclic – Move to center to stop bumping. Reestablish hover. Land immediately.

Figure 11-1. Mast Bumping Recovery/Technique

11.5.1 Recovery Procedure

See MAST BUMPING (paragraph 14.18).

11.6 VORTEX RING STATE

Vortex ring state is an uncommanded rate of descent caused by the helicopter settling into its own downwash. In this state, the flow through the rotor system is upward near the center of the rotor disk and downward in the outer portion. This results in zero net thrust from the rotor and extremely high aircraft descent rates. Vortex ring state is not restricted to high gross weights or high density altitudes. It may not be recognized and a recovery effected until considerable altitude has been lost. Helicopter rotor theory indicates that it is most likely to occur when descent rates exceed 800 feet per minute during vertical descents initiated from a hover and steep approaches at less than 40 KIAS.

WARNING

Increasing collective has no effect toward recovery and will aggravate vortex ring state. During approaches at less than 40 KIAS, do not exceed 800 feet per minute descent rate.

11.6.1 Recovery Procedure

See VORTEX RING STATE (paragraph 14.30).

11.7 POWER REQUIRED EXCEEDS POWER AVAILABLE

When power required for a maneuver exceeds power available under the ambient conditions, an uncommanded rate of descent will result. Factors that can cause or aggravate this situation are:

1. High g loading (e.g., level turns).
2. High gross weight.
3. High density altitude.
4. Rapid maneuvering (e.g., quick stops).
5. Spool-up time from lower power settings to high power settings (i.e., power pull at the completion of a power recovery autorotation).
6. Loss of wind effect (e.g., descending below a tree line during a confined area landing).
7. Change of wind direction (e.g., during lower altitude/low airspeed flight terrain following).
8. Loss of ground effect (e.g., transitioning to forward flight from the deck of a ship with a heavy internal load).

Power required exceeding power available becomes dangerous to the crew and helicopter when operating in close proximity to obstructions where the pilot may not have enough altitude/maneuvering space to recover prior to impacting an obstacle. This condition will be aggravated by rotor droop and loss of tail rotor effectiveness associated with excessive power demands. Pilots can avoid power required exceeding power available by:

1. Preflight planning to calculate expected aircraft performance.
2. Avoiding excessive maneuvering, particularly during high/hot and/or high gross weight/marginal power available situations.
3. Avoiding high descent rates at low altitudes, which will require large power inputs to arrest the descent of the helicopter.
4. Avoiding downwind landings and takeoffs.
5. Maintaining awareness of windspeed and direction, especially during low altitude/low airspeed maneuvers.
6. Maintaining awareness of the factors leading to power required exceeding power available and the associated effects on aircraft and performance.

11.7.1 Recovery Procedure

See POWER REQUIRED EXCEEDS POWER AVAILABLE (paragraph 14.5).

11.8 DYNAMIC ROLLOVER CHARACTERISTICS

Dynamic rollover is a phenomenon peculiar to helicopters and primarily to skid-configured/rigid gear helicopters. It is an accelerated roll about a ground-attached point (i.e., landing gear or skid). This roll requires ground contact and occurs extremely rapidly in proportion to both roll rate and angle, allowing little opportunity for recovery.

During normal takeoffs and landings, slope takeoffs and landings, or landings and takeoffs with some bank angle or side drift, the bank angle or side drift can cause the helicopter to get into a situation where it is pivoting about a skid. When this happens, lateral cyclic control response is more sluggish and less effective than for the free hovering helicopter. Consequently, if the bank angle (the angle between the aircraft and the horizon) is allowed to build up past 15°, the helicopter will enter a rolling maneuver that cannot be corrected with full cyclic and the helicopter will roll over on its side. In addition, as the roll rate and acceleration of the rolling motion increase, the angle at which recovery is still possible is significantly reduced. The critical rollover angle is also reduced for a right skid-down condition, crosswinds, lateral center-of-gravity offset, and left pedal inputs.

When performing maneuvers with one skid on the ground, care must be taken to keep the aircraft trimmed, especially laterally. For example, if a slow takeoff is attempted and the tail rotor thrust contribution to rolling moment is not trimmed out with cyclic, the critical recovery angle may be exceeded in less than 2 seconds. Control can be maintained if the pilot maintains trim, does not allow aircraft rates to become large, and keeps the bank angle from getting too large. The pilot must fly the aircraft into the air smoothly, keeping executions in pitch, roll, and yaw low and not allowing any untrimmed moments.

Collective is much more effective in controlling the rolling motion than lateral cyclic because it reduces the main rotor thrust. A smooth, moderate collective reduction of less than approximately 40 percent (at a rate less than approximately full up to full down in 2 seconds) is adequate to stop the rolling motion with approximately 2° bank angle overshoot from where down collective is applied. Care must be taken not to dump collective at too high a rate as to cause fuselage-rotor blade contact. Additionally, if the helicopter is on a slope and the roll starts to the upslope side, reducing collective too fast creates a high rate in the opposite direction. When the low slope skid hits the ground, the dynamics of the motion can cause the aircraft to roll downslope and over on its side. Do not pull collective suddenly to get airborne, as a large and abrupt rolling moment in the opposite direction will result. This moment may be uncontrollable.

11.8.1 Dynamic Rollover

In the dynamic rollover (Figure 11-2), the upsetting rolling moment is provided by a side force on the skid contacting the ground (analogous to the downslope skid in paragraph 11.8.2) instead of a vertical force on the upslope skid. This side force can be extremely large depending on the degree of restraint of the skid. The pilot will correct the roll angle with lateral control, but helicopter response will be sluggish, as described in paragraph 11.8.2, until the lateral control contacts the stop. Figure 11-2 shows a full-lateral control position. As in the slope landing case, the collective is used as a method of roll control. Since the lateral control cannot be moved far enough to get the main rotor lift line outside of the skid, the rotor generates an upsetting moment (L x d) about the skid. The only restoring moment capability is the weight of the helicopter (W) times the offset distance (e). The latter term (e) decreases to a value of zero at the static rollover angle, approximately 31°. At that point, the helicopter will roll over, regardless of control inputs. The pilot must realize that after the lateral control contacts the stop, roll angle can still be controlled with the collective. Down collective will level the helicopter and up collective will cause the helicopter to roll over immediately. The rate at which the collective should be lowered depends on the dynamics of the situation (roll rate at contact of the lateral stop). With full lateral control deflection, the TH-57 will encounter mast bumping when the roll rate reaches 10° per second. If recovery is not effected immediately, the tip-path plane will be gyroscopically tilted forward or aft (for roll to the right or left, respectively) by the bumping forces. This effectively removes cyclic control from the pilot and tilts the rotor blades into the ground. The only remaining control capability at this point is the collective

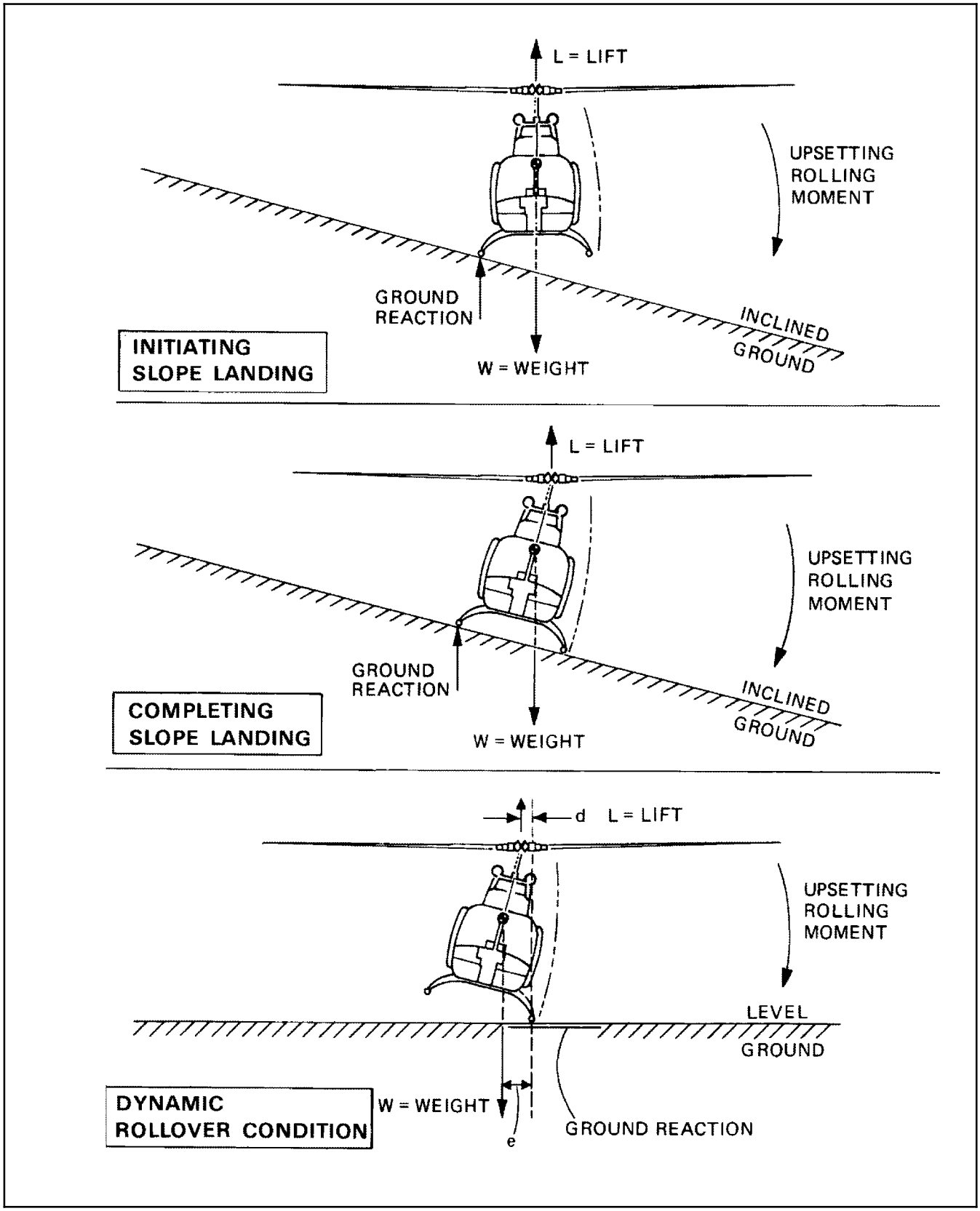

Figure 11-2. Slope Landing and Dynamic Rollover Condition

11.8.2 Slope Landings and Takeoffs

Only three major forces must be considered for the trimmed helicopter: longitudinal drift, lateral drift, and yaw (Figure 11-2). Slope landings should be made cross-slope by descending slowly, placing the upslope skid on the ground first. A coordinated reduction of collective pitch with lateral cyclic (into the slope) is applied until the downslope skid touches the ground. The lateral cyclic should always be positioned in order to maintain a level rotor tip-path plane. This prevents upslope or downslope drift. Collective pitch is reduced and cyclic applied into the slope until all the weight of the aircraft is resting firmly on the slope. If the lateral cyclic contacts the stop or if rotor-to-ground clearance becomes marginal before the downslope skid is resting firmly on the ground, the slope is too great and a landing should not be made. Hover is initiated by a coordinated raising of the collective and centering of the cyclic. Select a location where the degree of slope is not so great. After completion of a slope landing and determination that the aircraft will maintain its position on the slope, the cyclic stick is placed in the neutral position (with full-down collective) as desired for maximum ground clearance. Figure 11-2 shows that in the slope landing, the collective becomes a method of roll control and the lateral cyclic is used to keep the tip-path plane level. Lateral cyclic is less effective for this condition than it is in a hover because the roll center has been transferred from the helicopter cg to the upslope skid and the roll inertia is increased. Slope landings or takeoffs should not be attempted on slopes greater than the lateral control capability of the helicopter because the tip-path plane cannot be kept level. This angle is 7.5° for the TH-57. When performing slope takeoff and landing maneuvers, follow the published procedures, being careful to keep roll rates small. Slowly raise the downslope skid to bring the helicopter level and then lift off. (If landing, land on one skid and slowly lower the downslope skid.) If the helicopter rolls to the upslope side (5° to 8°), reduce collective to correct the bank angle and return to wings level and then start the takeoff procedure again.

11.8.3 Crosswind Landings and Takeoffs

Crosswind landings can generally be avoided in helicopter operations. Occasionally, plowed fields or narrow mountain ridges may require a crosswind landing. The crosswind landing in such instances is utilized to prevent landing at a high tipping angle or dangerous tail-low attitude. Crosswind landings may also be accomplished on smooth terrain when deemed advisable by the pilot. From a hover altitude, smoothly lower the collective while applying cyclic into the wind to prevent a side drift. Allow the helicopter to land with one skid low and, when the weight of the helicopter is firmly on the ground, smoothly decrease the collective to the full down position. In a crosswind takeoff, there will be a definite tendency to drift downwind. This tendency must be corrected by applying cyclic into the wind. Smoothly increase collective and allow the downwind skid to leave the deck slowly first.

Note

Do not attempt to level the skids prior to takeoff/landing, as this will aggravate the side drift and possibly lead to dynamic rollover.

11.8.4 Recovery Procedure

See DYNAMIC ROLLOVER (paragraph 14.6)

11.9 ROTOR BLADE STALL

Blade stall occurs when the angle of attack of a significant segment of the retreating blade exceeds the stall angle. When this condition occurs, increased blade pitch (or collective) will not result in increased lift and may result in reduced lift and increased rotor drag. One of the more important features of the TH-57 two-bladed, semirigid system is its warning to the pilot of impending blade stall. Prior to progressing fully into the stall region, the pilot will feel marked increase in airframe vibration and control vibrations. Consequently, corrective action can be taken before stall becomes severe. The threshold of stall varies with the following:

1. Airspeed.
2. Gross weight.
3. Density altitude.
4. G loading.
5. Rpm.

11.9.1 Recovery Procedure

See ROTOR BLADE STALL (paragraph 14.29).

11.10 LOSS OF TAIL ROTOR EFFECTIVENESS (UNANTICIPATED RIGHT YAW)

Four aircraft characteristics during low-speed flight have been identified through extensive flight and wind tunnel tests as contributing factors in unanticipated right yaw.

For this occurrence, certain relative wind velocities and azimuth (direction of relative wind) must be present. The aircraft characteristics and relative wind azimuth regions are:

1. Weathercock stability (120° to 240°).
2. Tail rotor vortex ring state (210° to 330°).
3. Main rotor vortex disk interference (285° to 315°).
4. Loss of translational lift (all azimuths).

The aircraft can be operated safely in the above relative wind regions if proper attention is given to controlling the aircraft; however, if the pilot is inattentive for some reason and a right yaw is initiated in one of the above relative wind regions, the yaw rate may increase unless suitable corrective action is taken.

11.10.1 Weathercock Stability (120° to 240°)

Winds within this region will attempt to weathervane the nose of the aircraft into the relative wind. This characteristic comes from the fuselage and vertical fin. The helicopter will make an uncommanded turn either to the right or left depending upon the exact wind direction unless a resisting pedal input is made. If a yaw rate has been established in either direction, it will be accelerated in the same direction when the relative wind enters the 120° to 240° shaded area of Figure 11-3 unless corrective pedal action is made. The importance of timely corrective action by the pilot to prevent high yaw rates from occurring cannot be overstressed.

11.10.2 Tail Rotor Vortex Ring State (210° to 330°)

Winds within this region, as shown in Figure 11-4, will result in the development of the vortex ring state of the tail rotor. The tail rotor vortex ring state causes tail rotor thrust variations that result in yaw rates. Because these tail rotor thrust variations do not have a specific period, the pilot must make corrective pedal inputs as the changes in yaw acceleration are recognized. The resulting high pedal workload in tail rotor vortex ring state is well known and helicopters are operated routinely in this region. This characteristic presents no significant problem unless corrective action is not timely. If a right yaw rate is allowed to build, the helicopter can rotate into the wind azimuth region where weathercock stability will then accelerate the right turn rate. Pilot workload during tail rotor vortex ring state will be high; therefore, the pilot must concentrate fully on flying the aircraft and not allow a right yaw rate to build.

11.10.3 Main Rotor Disk Vortex (285° to 315°)

Winds within this region, as shown in Figure 11-5, can cause the main rotor vortex to be directed onto the tail rotor. The effect of this main rotor disk vortex is to change the tail rotor angle of attack. Initially, as the tail rotor comes into the area of the main rotor disk vortex during a right turn, the angle of attack of the tail rotor is increased. This increase in angle of attack requires the pilot to add right pedal (reduce thrust) to maintain the same rate of turn. As the main rotor vortex passes the tail rotor, the tail rotor angle of attack is reduced. The reduction in angle of attack causes a reduction in thrust and a right yaw acceleration begins. This acceleration can be surprising, as the pilot was previously adding right pedal to maintain the right turn rate. Analysis of flight test data during this time verifies the tail rotor does not stall. The helicopter will exhibit a tendency to make a sudden, uncommanded right yaw, which, if uncorrected, will develop into a high right turn rate. When operating in this region, the pilot must anticipate the need for sudden left pedal inputs.

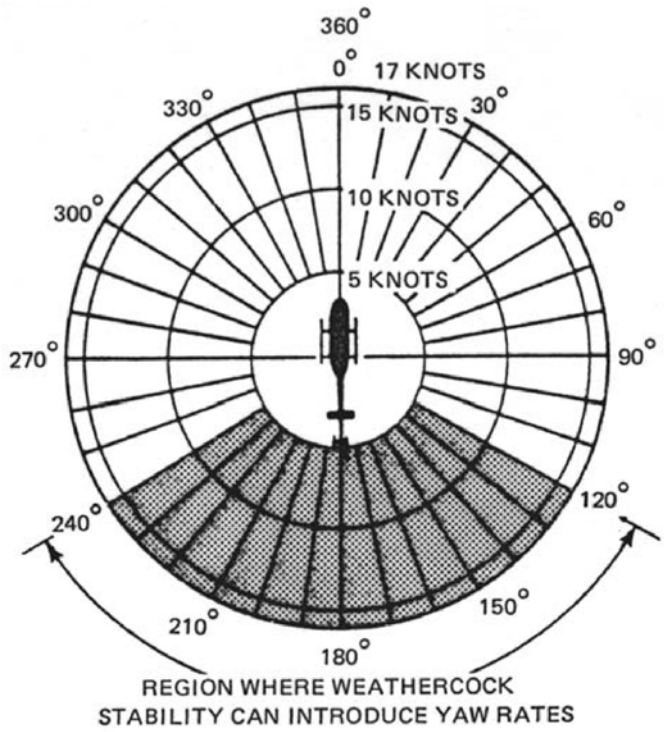

WEATHERCOCK STABILITY

Figure 11-3. Weathercock Stability

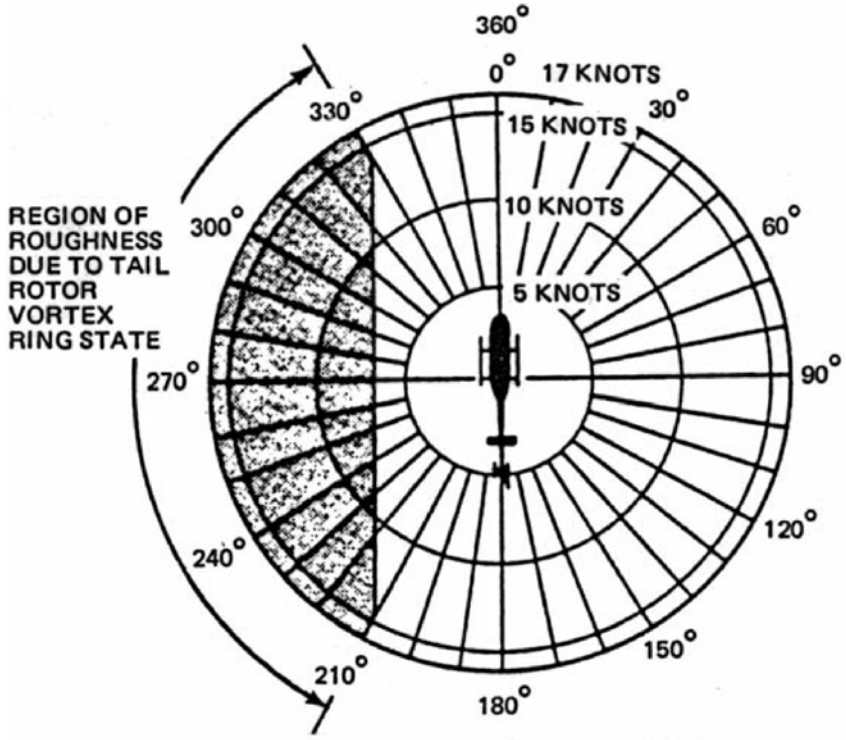

TAIL ROTOR VORTEX RING STATE

Figure 11-4. Tail Rotor Vortex Ring State

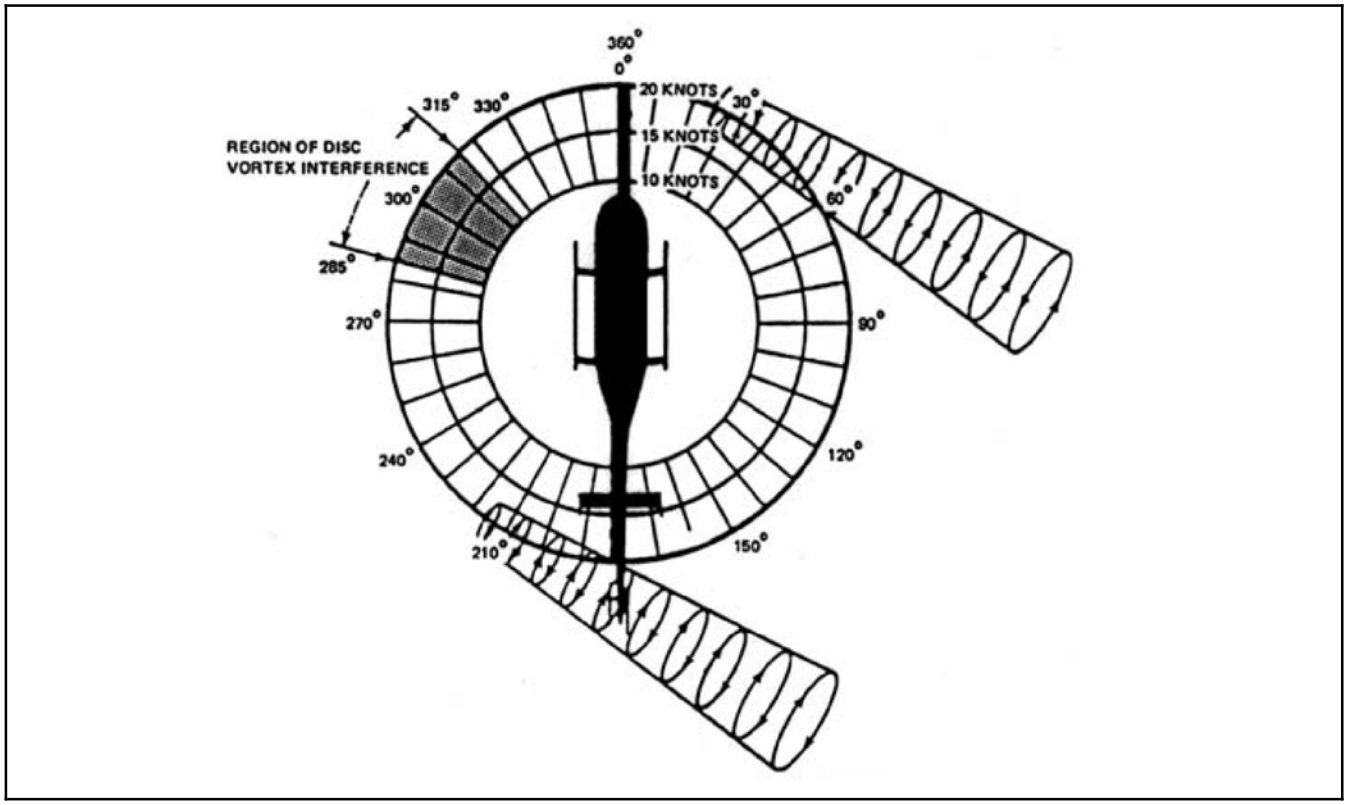

Figure 11-5. Main Rotor Disk Vortex Interference

11.10.4 Loss of Translational Lift

The loss of translational lift results in increased power demand and additional antitorque requirements. If the loss of translational lift occurs when the aircraft is experiencing a right turn rate, the right turn rate will be accelerated as power is increased, unless corrective action is taken by the pilot. When operating at or near maximum power, this increased power demand could result in rotor rpm decay. This characteristic is most significant when operating at or near maximum power and is associated with unanticipated right yaw for two reasons. First, if the attention of the pilot is diverted as a result of the increasing right yaw rate, he may not recognize that he is losing relative wind and, hence, losing translational lift. Second, if the pilot does not maintain airspeed while making a right downwind turn, the aircraft can experience an increasing right yaw rate as the power demand increases and the aircraft develops a sink rate. Insufficient pilot attention to wind direction and velocity can lead to an unexpected loss of translational lift. The pilot must continually consider aircraft heading, groundtrack, and apparent groundspeed, all of which contribute to wind drift and airspeed sensations. Allowing the helicopter to drift over the ground with the wind results in a loss of relative windspeed and a corresponding decrease in the translational lift produced by the wind. Any reduction in translational lift will result in an increase in power demand and antitorque requirements.

11.10.5 Loss of Tail Rotor Effectiveness

In a right crosswind, the relative wind shifts toward a tail rotor blade's chord line because of effectively increasing the induced velocity. The shifted relative wind impacts at a lower AOA, which develops lower lift and results in less thrust. The pilot will automatically compensate by adding more left pedal, but in some cases can reach pedal travel limits before adequate thrust can be generated.

11.10.6 Recovery Procedure

See Loss of Tail Rotor Effectiveness in Part V.

11.11 LOSS OF TAIL ROTOR AUTHORITY

The ability of the tail rotor to provide antitorque and yaw control can be greatly reduced by two factors that are easily confused. Loss of tail rotor authority (LTA) is related to power available to the main and tail rotor. Loss of tail rotor effectiveness (LTE) is related to the direction from which the wind strikes the tail rotor in a hover and tends to be labeled as an aerodynamic phenomenon compared to LTA, which is most often described as a mechanical phenomenon.

This occurs when power required for hover exceeds power available power supplied to the main rotor is delivered as a torque at a certain RPM.

When the engines are providing the maximum that they are capable of at 100% RPM it will translate to a certain amount of torque. If the pilot demands more performance by continuing to increase collective the AOA on the main rotor blades will increase. Lift will increase, but so will drag. Because power is a constant, the main rotor response to the increased drag will be an increase in torque and a decrease in RPM.

Tail rotor thrust required for flight is a function of main rotor torque. Tail rotor thrust available is a function of RPM squared. When the main rotor slows down it also slows down the tail rotor, providing less tail rotor thrust. Thus, the increased tail rotor thrust required to counteract increasing main rotor torque with drooped turns is not available. The pilot can call for more tail rotor thrust by increasing tail rotor torque with increased left pedal, but at some point the ability to increase tail rotor AOA runs out. When tail rotor thrust required exceeds tail rotor thrust available, LTA occurs and the nose of the aircraft yaws to the right.

11.12 CONTROL FEEDBACK

Feedback in the cyclic stick or collective stick is caused by high loads in the control system. These loads are generated during severe maneuvers and can be of sufficient magnitude to overpower or feed through the main boost cylinders and into the cyclic and/or collective stick. The pilot will feel this feedback as an oscillatory shaking of the controls even though he may not be making control inputs after the maneuver is established. This type of feedback will normally vary with the severity of the maneuver. The pilot should regard it as a clue that high control system loads are occurring and should immediately reduce the severity of the maneuver.

11.13 ROTOR DROOP

Droop is a term used to denote a change in power turbine speed (N_f) and rotor speed that occurs with a demand for increased power with the governor at a constant speed setting. Droop may be further categorized as either transient or steady state. Transient droop is the momentary change in power turbine speed and rotor speed resulting from an increased power demand, and it is compensated for by the power turbine governor control. Steady-state droop is the decrease in power turbine speed and rotor speed that results from an increased power demand when the engine is already operating at maximum gas producer speed. This condition should be avoided during normal operation.

11.14 VIBRATION IDENTIFICATION

11.14.1 Low-Frequency Vibrations

Low-frequency vibrations, one per revolution and two per revolution, are originated by the main rotor. One-per-revolution vibrations are of two basic types: vertical or lateral. A vertical one-per-revolution vibration is caused by one blade developing more lift than the other blade at the same point or, simply, an out-of-track condition. A lateral one-per-revolution vibration is caused by an unbalance of the main rotor because of either a difference or weight between the blades (spanwise unbalance) or the misalignment of the blades (chordwise unbalance).

Rigidly controlled manufacturing processes and techniques eliminate all but minor differences between blades, resulting in blades that are nearly identical; these minor differences may affect the flight vibration level and are reduced by adjustments of the trim tabs, blade pitch settings, or small balance adjustments.

Sometimes during steep turn maneuvers, one blade may pop out of track, causing a vertical one-per-revolution vibration. This condition generally indicates an excessive trim tab setting differential and is corrected by rolling the blade and reducing some of the trim tab differential.

Two-per-revolution vibrations are inherent with the two-bladed rotor systems and a low level of vibration is always present. The normal two-per-revolution threshold is approximately 100 to 110 knots and becomes more pronounced with additional speed.

11.14.2 Medium-Frequency Vibrations

Medium-frequency vibrations at frequencies of four per revolution and six per revolution are other inherent vibrations associated with the main rotor system. An increase in the level of these vibrations is caused by a change in the capability of the fuselage to absorb vibrations or a loose airframe component vibrating sympathetically at that frequency.

11.14.3 High-Frequency Vibrations

High-frequency vibrations can be caused by anything in the aircraft that rotates or vibrates at a speed equal to or greater than that of the tail rotor.

High-frequency vibrations are much too fast to count and feel like a buzz. These frequencies may come from the engine, improper drive shaft alignment, couplings improperly functioning, bearings dry or excessively worn, or an out-of-track tail rotor. If excessive high-frequency vibrations exist, it is recommended that the aircraft land and a crewmember attempt to locate the source. The area where the highest amplitude of the vibration exists is generally the area from which the vibration is originating.

11.14.4 Recovery Procedure

See HIGH-FREQUENCY VIBRATION in Part V.

PART V

Emergency Procedures

Chapter 12 — Emergency Procedures

Chapter 13 — Ground Emergencies

Chapter 14 — In-Flight Emergencies

Chapter 15 — Landing Emergencies

Chapter 16 — Emergency Egress/Survival Procedures

CHAPTER 12

Emergency Procedures

12.1 INTRODUCTION

The following procedures contain the indications of failures or malfunctions that affect safety of the crew, the helicopter, ground personnel, or property; the use of emergency features of primary and backup systems; and appropriate warnings, cautions, and explanatory notes. See Figure 12-1.

12.2 SPECIAL INSTRUCTIONS

12.2.1 Definition of Landing Terms

The following terms indicate the degree of urgency in landing the helicopter:

Land immediately	Execute a landing without delay. The primary consideration is to assure the survival of the occupants.
Land as soon as possible	Land at the first site at which a safe landing can be made.
Land as soon as practical	Extended flight is not recommended. The landing site and duration of flight is at the discretion of the pilot in command.

12.2.2 Precautionary Landings

A precautionary landing is defined as a landing when further flight is possible but inadvisable. Such landings will be governed by the following:

When an indication is received by the warning lights or instruments that continued flight would jeopardize the safety of the helicopter or crew.

When control function is questionable or instruments that are essential for continued flight fail.

Any condition of uncertainty or distress.

12.2.3 Memory Items

Items indicated with an asterisk (*) shall be completed without reference to the checklist.

PANEL WORDING	CONDITION	CORRECTIVE ACTION
ENG OUT	Engine power failure N_g at 55 ±3%.	Engine power failure accompanied by an aural signal. Monitor N_r and engine instruments and enter autorotation if power failure is confirmed. If actuation of the warning system is the result of N_g tachometer generator or speed sensor switch failure, land as soon as practical.
ENG FIRE	Excessive heat in engine compartment.	Refer to Engine Fire procedures.
BATTERY HOT	Battery case temperature is 60° ±3 °C or higher.	BAT switch — OFF. Land as soon as possible. **Note** Switching the Main Battery Off opens the main battery relay, which causes the "STBY BATT ON" light to illuminate. As long as the ESS No. 1 bus is being powered normally, the standby battery will not be depleted.
BATTERY TEMP	Battery case temperature is 54° ±3 °C or higher.	BAT switch — OFF. Flight may be continued. **Note** Switching the Main Battery Off opens the main battery relay, which causes the "STBY BATT ON" light to illuminate. As long as the ESS No. 1 bus is being powered normally, the standby battery will not be depleted.
ROTOR LOW RPM	N_r less than 90 ±3%.	Collective — Lower to preserve N_r. Check twist grip full open. If power is not regained, follow Engine Failure procedures. If activation of the warning system is the result of an N_r tachometer generator failure, monitor engine instruments and land as soon as practical.
ENG CHIP/ CLEAR CHIP	Metal particles on engine chip detector.	Engine instruments — Check engine instruments for secondary indications of impending failure. If these indications exist, land as soon as possible. If no secondary indications exist, proceed as follows: First chip light — Press CLEAR CHIP; if ENG CHIP light goes out, note the time and continue flight. If ENG chip remains illuminated, land as soon as possible. Second chip light — If within 30 minutes of the first, land as soon as possible. If more than 30 minutes have elapsed since the first light, press CLEAR CHIP and proceed as with the first light. Any subsequent chip light — If within 50 flight hours of the first, land as soon as possible and make no attempt to clear chip. All chip lights shall be documented on a VIDS/MAF.
TRANS CHIP/CLEAR CHIP Condition	Metal particles on transmission chip detector or free wheeling unit.	Instruments — Check transmission instruments for secondary indications of impending failure. If these indications exist, execute Imminent Transmission Failure procedures. If no secondary indications exist, proceed as follows: First chip light — Press CLEAR CHIP; If TRANS CHIP light goes out, note the time and continue flight. If TRANS CHIP remains illuminated, land as soon as possible. Second chip light — If within 30 minutes of the first, land as soon as possible. If more than 30 minutes have elapsed since the first light, press CLEAR CHIP and proceed as with the first light. Any subsequent chip light — If within 50 flight hours of the first, land as soon as possible and make no attempt to clear chip. All chip lights shall be documented on a VIDS/MAF.

Figure 12-1. Caution and Warning — Corrective Action (Sheet 1 of 3)

PANEL WORDING	CONDITION	CORRECTIVE ACTION
TRANS OIL PRESS	Transmission oil pressure at or below 30 ±2 psi.	Land as soon as possible. **Note** Check the transmission oil pressure with the twist grip full open. Illumination of the TRANS OIL PRESS caution light is common, while the twist grip is at flight idle; however, the gauge should indicate positive transmission oil pressure.
TRANS OIL TEMP	Transmission oil temperature above 110 °C.	Land as soon as possible.
T/R CHIP	Metal particles on tail rotor gearbox chip detector.	Land as soon as possible.
TRQ	TRQ light flashes once per second within transient range.	Adjust collective as required to remain within limits. **WARNING** Lowering the collective to avoid an overtorque may create or exacerbate an unsafe flight profile. An overtorque is preferable to further damage or destruction of the aircraft.
	TRQ light flashes twice per second when limit is exceeded.	If 110% has been exceeded, land as soon as possible. If the five second transient has been exceeded, land as soon as practical. **Note** TRQ light will extinguish once out of transient and exceedance ranges. Digital readout will continue to flash twice per second if limit is exceeded.
TOT	TOT light flashes once per second within transient range.	Adjust collective as required to remain within limits.
	TOT light flashes twice per second when limit is exceeded.	Land as soon as possible. **Note** TOT light will extinguish once out of transient and exceedance ranges. Digital readout will continue to flash twice per second if limit is exceeded.

Figure 12-1. Caution and Warning — Corrective Action (Sheet 2)

PANEL WORDING	CONDITION	CORRECTIVE ACTION
A/F FUEL FILTER	Impending bypass of A/F FUEL FILTER	Land as soon as possible. **WARNING** Be prepared for a fuel control malfunction or complete power loss.
FUEL PUMP	One or both fuel boost pumps are inoperative.	Refer to Fuel Boost Pump Failure procedures. **WARNING** With one or both boost pumps inoperative, minimum fuel is 20 gallons; 10 gallons is unusable.
FUEL LOW	Less than 20 gallons of fuel remaining.	Monitor fuel quantity, land with minimum of 10 gallons indicated. If fuel pump light is on, land as soon as possible.
HYDRAULIC PRESSURE	Hydraulic pressure at or below 300 psi.	Refer to Hydraulic System Malfunction procedures.
BATTERY RLY (TH–57C)	Illumination during starting is normal. At other times with BAT switch — ON, continued illumination indicates fault in battery relay or protection circuits.	Regain/remain VMC and land as soon as practical. **Note** Inadvertent starter engagement will illuminate the BATTERY RLY light.
FCS OFF (TH–57C)	Failure of AFCS fault protective circuits.	If light continues to illuminate, push STAB button off, pull FCS circuit breaker.
MAIN GEN or GEN FAILURE	Main generator has failed.	Refer to Generator Failure procedures.
STBY BATT ON (TH–57C)	Turning the main battery off, or with battery depletion with the STBY ATT IND switch on, will illuminate the STBY BATT ON light.	On the ground, turn the STBY ATT IND switch OFF. **Note** The standby battery provides 1.5 hours of operation to the attitude indicator when fully charged.
STBY GEN FAIL (TH–57C)	Standby generator failure.	Refer to STBY GEN FAIL (TH–57C) procedures.
DUCT TEMP HIGH	Excessive heat in ducting.	Turn cabin heat valve off. Turn AIR COND/FAN switch to FAN. Turn HI/FAN/LO switch to HI. If the DUCT HIGH TEMP caution light does not extinguish, land as soon as practical.
SPARE	Light incorrectly wired.	Check for other indications and land as soon as possible.

WARNING

If a caution light illuminates and then extinguishes, or flickers repeatedly, the pilot shall proceed with the applicable procedures associated with that system malfunction.

Figure 12-1. Caution and Warning — Corrective Action (Sheet 3)

CHAPTER 13

Ground Emergencies

13.1 EMERGENCY SHUTDOWN

Emergency Shutdown procedures shall be executed anytime a rapid crew egress is necessary. Situations include, but are not limited to, engine, electrical, or fuselage fires in or around the helicopter, or severe hard landing.

Indications:

1. Fire warning light illuminated.
2. Smoke.
3. Fuel fumes.
4. Fire.
5. Indication from ground personnel.
6. Grinding noises or apparent drive train damage.

Procedures:

*1. Twist grip — Close.

*2. Fuel valve — OFF.

*3. BAT switch — OFF.

(C) *4. STBY ATT IND switch — OFF.

(C) *5. Rotor brake — Engage immediately.

*6. Helicopter — Egress and use the fire bottle as required to extinguish the fire or get clear of the aircraft.

WARNING

After exiting aircraft, beware of rotor blades.

13.2 ABORT START

The Abort Start procedure is intended for use when any abnormalities are encountered during the start sequence. Abnormal starts may be, but are not limited to, the following categories:

1. An igniter failure is indicated when:

   a. TOT fails to rise after twist grip rotated to flight idle.

   b. N_g fails to rise above 20 percent.

2. A hung start is indicated when:

   a. N_g rises slowly and stabilizes.

   b. TOT rises more slowly than normal.

3. A hot start is indicated when:

   a. TOT exceeds limits.

   b. TOT caution light and digital display flash twice per second.

Note

An excessive rise in TOT, TOT rapidly accelerating through 840 °C, and/or the battery voltage stabilized below 17 volts on starter engagement particularly when combined, indicates an increased potential for a hot start and may necessitate aborting the start to preclude an overtemp.

In the event of a mechanical failure in the engine or control linkage, the twist grip may not secure fuel flow to the engine. Turning the fuel valve off will provide the only means of securing fuel flow if the twist grip fails to control TOT.

Note

If a subsequent start is attempted, utilize a GPU.

Procedures:

*1. Twist grip — Close.

*2. Starter — Secure after TOT stabilizes at 400 °C or below.

13.3 POST SHUTDOWN FIRE (INTERNAL)

A post shutdown fire is an internal engine fire that occurs in an engine that is stopped or coasting down.

Indications:

1. TOT rises above 400 °C.
2. Flames or smoke coming from engine.

Procedures:

*1. Starter — Engage.

*2. Fuel valve — OFF.

*3. Igniter circuit breaker — Pull.

*4. Starter — Secure after fire is extinguished.

CHAPTER 14

In–Flight Emergencies

14.1 ENGINE FAILURE

Under operational conditions, the altitude–airspeed combination for a safe autorotative landing is dependent upon many variables such as pilot capabilities, density altitude, helicopter gross weight, proximity of a suitable landing area, and wind direction and velocity in relation to flightpath. This does not preclude operation in the shaded area of the height velocity diagram under emergency or pressing operational requirements. Immediately upon an engine failure, rotor rpm will decay and the nose of the helicopter will swing to the left. This is because of the loss in power and corresponding reduction in torque. Except in those instances when an engine failure is encountered in close proximity to the surface, it is mandatory that autorotation be established by immediately lowering the collective pitch to minimum.

Heading can be maintained by depressing the right pedal to decrease the tail rotor thrust. Autorotative rpm will vary with different ambient temperature, pressure altitude, increase in g loading, and gross weight conditions. High gross weights, increased g loads, and higher altitudes and temperature will cause increased rpm that can be controlled by increasing collective pitch. Any increase of rotor rpm, other than specified for maximum glide, will result in a greater rate of descent; therefore, if time permits, adjusting the collective pitch lever to produce the desired rotor rpm will result in an extended glide. At an altitude of approximately 75 to 100 feet, a flare should be established by moving the cyclic stick aft with no change in collective pitch. This will decrease both airspeed and rate of descent and cause an increase in rotor rpm. The amount that the rotor rpm will increase is dependent upon gross weight and the rate that the flare is executed. An increase is desirable because more energy will be available to the main rotor when collective pitch is applied. From this condition of airspeed and low altitude, flare capability is limited and caution should be exercised to avoid striking the ground with the tail; the primary objective is to level the skids prior to ground contact. Initial collective reduction varies with altitude; from a 5–foot skid height, do not attempt collective reduction but use the available rotor energy and collective to cushion touchdown; above 5–foot skid heights, a partial reduction of collective will maintain rotor rpm until up collective is initiated to cushion touchdown.

Note

- The best glide airspeed is 72 KIAS. The minimum rate of descent airspeed is 50 KIAS. Do not exceed 100 KIAS in sustained autorotation.
- If time and altitude permit, engine restart may be attempted. The decision to attempt a restart is the pilot’s responsibility and is dependent upon the pilot’s experience and operating altitude.
- All autorotative landings should be made into the wind to a suitable landing site.

Indications:

N_r decrease.

Rapid settling.

Left yaw.

ROTOR LOW RPM caution light and audio.

ENGINE OUT caution light and audio.

14.1.1 Engine Failure In Flight

In the event of an engine failure in flight, a safe landing can be accomplished, provided that altitude and airspeed combination is within safe limits and altitude is sufficient to permit selection of a suitable landing area. Consideration should be given to an engine restart in flight.

Procedures:

*1. Autorotate.

*2. Shoulder harness — Lock.

If time and altitude permit:

*3. Mayday — Transmit.

*4. Transponder — Emergency.

14.1.2 Engine Failure at High Airspeed and Low Altitude

Should an engine failure occur at high airspeed and low altitude, a rapid loss of N_r accompanied by a severe nose–tucking tendency will occur.

Procedures:

*1. Cyclic — Immediately apply aft.

*2. Autorotate.

WARNING

Rapid cyclic movement should be avoided to preclude mast bumping.

14.2 OVERTORQUE/OVERSPEED/OVERTEMP

If any overtorque exceeding 110 percent, overspeed, or overtemp is observed, land as soon as possible.

14.3 COMPRESSOR STALL

Compressor stalls can vary in severity, duration, and recoverability. A compressor stall may present itself as a single pop, a sustained rumble, or a series of loud bangs. The engine instruments may fluctuate, spike, or exceed limits, and the aircraft may become uncontrollable. As a result, recovery and subsequent landing will vary based on the severity of the stall, aircraft controllability, and pilot experience. Often a reduction in collective will clear the stall. However, twist grip reduction may be required. Depending on time, altitude, and suitability of the landing site the pilot may attempt to increase the twist grip after the stall has cleared to effect a safe landing.

Note

Bleed valve flutter is a mild pop or series of pops and may occur while opening the twist grip. This bleed valve flutter is considered normal as the bleed valve is operating as designed. The bleed valve flutter may cause slight momentary TOT and torque changes. Any additional indications should be reason to classify this as a compressor stall.

Indications:

Popping, rumbling or loud banging.

Abnormal vibrations.

Rapid rise or fluctuations in TOT.

Torque fluctuations with yaw kicks.

N_g fluctuation.

Loss of power.

WARNING

Be prepared for complete power loss.

Procedures:

*1. Collective — Reduce.

Note

Power (collective) reduction will often eliminate compressor stalls.

*2. ENG Anti-ice switch — ON.

*3. Cabin Heat Valve — ON.

If compressor stall persists and the aircraft is uncontrollable:

*4. Autorotate.

*5. Twist grip — Flight Idle.

Note

Depending on time, altitude, and suitability of the landing site the pilot may attempt to increase the twist grip after the compressor stall has cleared to affect a power on landing. Increasing the twist grip may re-aggravate the compressor stall.

If compressor stall clears or the aircraft is controllable:

*6. Land as soon as possible.

CAUTION

When accelerating the rotor system during the initial rotor engagement or after power off maneuvers, exceeding 40 percent torque may induce engine chugging which may induce a compressor stall.

Note

Mild compressor stalls may occur that will allow powered flight if TOT is within operating limits.

14.4 UNDERSPEEDING N_f/N_r

If the pilot inadvertently rotates the twist grip out of the FULL OPEN position, it will create conditions that resemble underspeed indications. If the aircrew determines these conditions were induced by the pilot, flight may be continued once conditions return to normal.

Indications:

Low N_r.

Low N_f.

WARNING

Be prepared for complete power loss.

Procedures:

*1. Collective — Lower as required to maintain a minimum of 90% N_r.

*2. Twist grip — Full open.

*3. GOV RPM — Full increase.

If underspeed persists:

*4. Check power available with N_r in limits.

Note

Power available is considered to be sufficient if level flight can be maintained with N_r at 90 percent or higher. Do not decelerate below 50 KIAS (minimum power airspeed) while executing a power check.

If power is not sufficient:

*5. Autorotate.

Note

If some usable power exists but level flight cannot be maintained, that power, if sufficient, may be utilized to effect a landing or minimize rate of descent en route to a more suitable site for autorotation.

If sufficient power is available:

*6. Land as soon as possible.

Note

If power available exceeds power required to hover in ground effect, a normal approach to a hover can be executed. If power available is less than power required to hover, but level flight can be maintained, fly to a safe landing area and execute a no–hover landing or sliding landing. Terrain permitting, a sliding landing requires the least amount of power.

14.5 POWER REQUIRED EXCEEDS POWER AVAILABLE

Indications:

Uncommanded descent with torque at maximum available.

Rotor droop.

Loss of tail rotor authority.

Procedures:

*1. Collective — Lower as required to maintain a minimum of 90% N_r.

*2. Twist grip — Full open.

*3. Angle of bank — Level wings.

*4. Airspeed — Adjust to 50 KIAS (minimum power required airspeed).

*5. Jettison — As required.

If impact is imminent:

*6. Level the aircraft to conform to terrain.

*7. Cushion the landing.

14.6 DYNAMIC ROLLOVER

Indications:

Excessive roll rates about a pivot point when lift approximately equals weight.

Lateral control becomes sluggish or ineffectual.

Cyclic contacts lateral stop.

Procedures:

*1. Collective — Reduce to stop the roll.

*2. Cyclic — Neutral.

WARNING

- With one skid on the ground and thrust approximately equal to the weight, if the lateral control becomes sluggish or ineffectual, contacts the lateral stop, or if bank angle or roll rates become excessive (15° or 10° per second respectively), the aircraft may roll over on its side.
- Failure to keep the aircraft in trim during takeoff or landing could result in dynamic rollover.

14.7 ENGINE OVERSPEED (N_f) ROTOR RPM (N_r)

Indications:

N_r increase.

N_f increase.

N_g increase.

TOT increase.

Right yaw.

Engine noise increase.

Procedures:

*1. Twist grip — Reduce (to maintain N_f/N_r in operating range).

*2. Collective/twist grip — Coordinate.

Note

The N_f overspeed must be controlled by coordinating collective and twist grip.

*3. Land as soon as possible.

14.8 FUEL CONTROL FAILURE

Indications:

Erratic N_f.

Fluctuating N_g and/or TOT.

Procedures:

*1. Collective — Adjust as required to maintain N_r in operating range.

*2. Twist grip — Adjust (to maintain N_f/N_g in operating range).

*3. Land as soon as possible.

WARNING

Be prepared for complete power loss.

14.9 ENGINE RESTART IN FLIGHT

An engine flameout in flight would most likely result from a malfunction of the fuel control unit or fuel system. The decision to attempt an engine restart during flight is the pilot's responsibility and is dependent upon the pilot's experience and the operating altitude. Consideration must be given to the cause of the failure prior to attempting restart. If attempting an engine restart, proceed as follows:

Procedures:

*1. Autorotate.

*2. Starter — Engage.

*3. Twist grip — Check, Full open.

Note

The twist grip can be left in the full open position since fuel flow during the start will be on the normal acceleration schedule.

If light–off does not occur:

*4. Twist grip — Close.

Note

If time and altitude permit multiple attempts can be made to perform a normal start.

If light–off occurs:

*5. Twist grip — Full open.

*6. Land as soon as possible.

Note

Main generator and BUS/TIE RELAY (TH–57C) may need to be reset.

14.10 MAIN DRIVE SHAFT FAILURE

Indications:

N_r decrease.

N_f indication higher than N_r.

Left yaw.

Loud bang/sound of overspeeding engine.

Low torque.

Procedures:

*1. Autorotate.

*2. Twist grip — Adjust, if necessary, to maintain N_f in operating range.

WARNING

The engine must continue to operate to provide tail rotor drive. Tail rotor effectiveness may be lost if N_f is allowed to go below 80 percent.

Note

The N_f governor should bring the N_f back to 100% with the twist grip full open.

When on deck:

*3. Emergency shutdown — Complete.

14.11 SPRAG CLUTCH SLIPPAGE

Sprag clutch slippage may occur following power-off maneuvers in which N_r and N_f have been split.

When the twist grip is increased to full open, the pilot may experience the following indications:

N_f indication higher than N_r.

Low torque indication.

N_g and TOT indications lower than normal and not responsive to collective.

Procedures:

*1. Autorotate.

*2. Twist grip — FLT IDLE.

If time and altitude permit:

*3. Twist grip — Smoothly rotate to full open.

If N_f/N_r are married:

*4. Collective — Increase.

Note

Multiple attempts to reengage the sprag clutch are permitted dependent on time and altitude.

If sprag clutch continues to slip:

*5. Autorotate.

*6. Twist grip — Closed.

If the sprag clutch reengages:

*7. Land as soon as possible.

CAUTION

After completing the autorotative landing, ensure the twist grip is secured. Failure to do so may result in sudden reengagement of the sprag clutch, causing severe damage to the drive system.

14.12 SPRAG CLUTCH SEIZURE

Indications:

N_f/N_r married during shutdown.

N_f/N_r married above 100 percent during autorotational flight.

Note

In a normal autorotation, N_r and N_f may be matched together between 92 to 96 percent steady state.

*1. Ensure twist grip is full open.

*2. Land as soon as possible.

WARNING

If suspected during a practice autorotation, execute a waveoff.

14.13 IMMINENT TRANSMISSION FAILURE

If abnormal transmission temperature or pressure indications are accompanied by the illumination of the TRANS CHIP light or abnormal sound from the transmission area:

*1. Land immediately.

WARNING

Do not autorotate; minimize power changes.

*2. Lock harness.

14.14 ENGINE FIRE IN FLIGHT

Indications:

Fire light.

Smoke.

Flames.

Procedures:

WARNING

Be prepared for complete power loss.

*1. Confirm existence of fire.

If fire exists:

*2. Land immediately.

*3. Emergency shutdown — Complete after landing.

If fire not confirmed:

*4. Land as soon as possible.

14.15 FUSELAGE FIRE

Procedures:

*1. Land immediately.

*2. Emergency shutdown — Complete.

WARNING

Fire extinguisher fluid vapors are dangerous; fire extinguisher use should be limited to a well–ventilated area. A moving TH–57 with the cabin vents and windows open is considered to be a well–ventilated area.

Note

A sideslip may be desirable to keep the flame from spreading.

14.16 FUEL BOOST PUMP FAILURE

Failure of one or both fuel boost pumps will be evidenced by illumination of the FUEL PUMP caution light.

If one pump has failed, indicated fuel pressure will be normal (4 to 30 psi). If both pumps have failed, indicated fuel pressure will be zero.

The engine will operate with only one operable boost pump under all conditions of power and altitude; with a dual boost pump failure, the engine–driven fuel pump is only capable of supplying fuel to the engine at altitudes below 6,000 feet PA.

In the event of a single or dual boost pump failure, maintain a level–attitude and balanced flight to the maximum extent possible to prevent engine flameout that could be caused by the operating submersible pump being uncovered and allowing air to be drawn into the fuel lines or by both boost pumps being inoperative and allowing air to be drawn into the engine–driven fuel pump.

Indications:

FUEL PUMP caution light.

Indicated fuel pressure of zero (dual–pump failure).

Procedures:

*1. Descent — Initiate if above 6,000 feet PA and flight permits.

*2. Fuel pressure and quantity — Note.

WARNING

With one or both boost pumps inoperative, minimum fuel is 20 gallons; 10 gallons is unusable.

If both fuel boost pumps have failed (fuel pressure at zero):

WARNING

Be prepared for complete power loss.

*3. Land as soon as possible.

If only one boost pump has failed (fuel pressure 4 to 30 psi):

4. Land as soon as practical.

WARNING

If an air leak exists in the fuel lines between the boost pumps and engine, a total loss of boost pump pressure could cause an engine flameout.

14.17 SUSPECTED FUEL LEAKAGE

Indications:

Unusual fuel usage.

Fuel fumes in cockpit.

Procedures:

*1. Land as soon as possible.

If time and altitude permit:

*2. Transmit position and intentions.

*3. Unnecessary electrical equipment — Secure.

WARNING

If an air leak exists in the fuel lines between the boost pumps and engine, turning off all electrical power could cause an engine flameout due to a total loss of boost pump pressure.

When on deck:

4. Shutdown — Completed.

5. Helicopter — Exit.

14.18 MAST BUMPING

Indications:

Sharp two-rev knocking.

Procedures:

If mast bumping is suspected:

*1. Establish positive G load and/or balanced flight (as required).

*2. Land immediately.

Note

If mast bumping occurs while on deck, maintenance action is required prior to flight.

14.19 MAIN GENERATOR FAILURE

Indications:

Loadmeter to zero.

MAIN GEN or GEN FAIL caution light — On.

(B) Dc voltmeter indicates battery voltage.

(C) Voltmeter indicates 0.

Procedures:

1. MAIN GEN FIELD and MAIN GEN RESET circuit breakers — Check in.
2. MAIN GEN switch — Reset, then ON.

If generator power is not restored:

3. MAIN GEN switch — OFF.

Note

Prior to shutting off all electrical power, the pilot must determine the equipment that is essential to the particular flight environment that will be encountered (e.g., flight instruments and fuel boost pumps).

4. Unnecessary electrical equipment — OFF.

(C) 5. NORMAL/RECOVER switch — RECOVER as desired.

(C) 6. Voltmeter Select Switch — MAIN BAT.

7. Descend below 6,000 feet PA.
8. Land as soon as practical.

If power is restored:

9. Continue flight.

WARNING

- With the battery switch OFF or battery exhaustion, both fuel boost pumps are inoperative.
- With one or both boost pumps inoperative, minimum fuel is 20 gallons; 10 gallons is unusable.
- Be prepared for a possible electrical and/or engine compartment fire because of excessive wiring load or generator meltdown.

Note

(C) - In the TH–57C, time of operation of ESS No. 2 bus on battery power is approximately 40 minutes with pitot heat OFF and an 80 percent charged battery (approximately 35 minutes with pitot heat ON). To conserve battery power as needed for extended flights or for use of landing lights at destination, turn off unnecessary electrical equipment on the ESS No. 2 and NON ESS Bus.

(C) - With the NORMAL/RECOVER switch in NORMAL, failure of the main generator will result in illumination of the FUEL PUMP caution light because of loss of power to the nonessential bus.

(C) - Selecting RECOVER with the NORMAL/RECOVER switch will cause the main battery to power the nonessential bus, accelerating main battery depletion.

(C) - Resetting the BUS/TIE RELAY circuit breaker with the MAIN GEN switch in the OFF position, regardless of the NORMAL/RECOVER switch position, will cause the main battery to power the nonessential bus, accelerating main battery depletion.

(C) - In the TH–57C, with the loss of the main battery after a main generator failure, the copilot's RMI will be inoperative. The pilot's HSI and RMI will be inoperative for TACAN, LOC, and VOR, however, the pilot's RMI will still provide GPS radial and relative ADF bearing.

(C) - Avoid prolonged operation at airspeeds below 65 knots to maintain standby generator cooling.

14.20 STANDBY GENERATOR FAILURE (C)

Indications:

STBY GEN FAIL caution light.

Procedures:

1. STBY GEN RELAY circuit breaker — In. Check voltmeter for indication.
2. STBY GEN switch — OFF, then ON.

If power not restored:

3. STBY GEN switch — OFF.
4. Land as soon as practical.

If power restored:

5. Continue flight.

14.21 INVERTER FAILURE (C)

14.21.1 FCS Inverter Failure (C)

Indications:

FCS light flashes.

Loss of pitch/roll servos.

Loss of FCS.

Note

FORCE TRIM will function.

Procedures:

If FCS inverter voltage is less than 111 volts:

1. FCS circuit breaker (ESS–1, lower panel) — Pull.
2. Establish VMC.

14.21.2 Avionics Inverter Failure (C)

Indications:

Ac voltage drop.

RMI — Needles failing in the VOR position.

Yaw servo failure.

Procedures:

1. AVIONICS INV circuit breaker (ESS–2, upper avionics panel) — Pull.

Note

Further flight in IMC is possible, but must be accomplished without RMIs and yaw servo.

14.22 DC LOADMETER AND VOLTMETER

If the loadmeter or voltmeter fluctuates erratically, pegs, or goes to zero:

1. Main Generator Switch — Reset, then ON.

If the problem is corrected:

2. Continue flight.

If the problem is not corrected:

3. Main Generator Failure procedures — Execute.

CAUTION

Sustained loadmeter indications greater than 70 percent may be followed by an electrical fire.

14.23 ELECTRICAL FIRE

Indications:

Loadmeter shows excessive load.

Dc voltmeter shows excessive load.

Smoke.

Fumes.

Sparks.

Procedures:

Prior to shutting off all electrical power, the pilot must consider the equipment that is essential to the particular flight environment that will be encountered (e.g., flight instruments and fuel boost pumps).

14.23.1 Electrical Fire — Unknown Origin

Procedures:

*1. BAT switch — OFF.

(C) *2. STANDBY GEN switch — OFF.

(C) *3. If in VMC, STBY ATT IND switch — OFF.

*4. MAIN GEN switch — OFF.

If fire persists:

*5. Land immediately.

If fire extinguishes:

*6. Land as soon as possible.

If electrical power is required to restore minimum equipment for continued flight, proceed as follows:

7. All circuit breakers — Pull.

(C) 8. Check BAT RELAY circuit breaker — In.

9. BAT switch — ON.

10. MAIN GEN FIELD and MAIN GEN RESET circuit breakers — In.

11. MAIN GEN switch — Reset, then ON.

(C) 12. STBY GEN RELAY circuit breaker — In.

(C) 13. STBY GEN switch — ON.

(C) 14. STBY ATT IND switch — ON.

15. Circuit breakers for essential equipment — In one at a time in order of importance.

Note

- Ensure corresponding bus supply circuit breakers are in to provide power to desired electrical equipment.
- Voltmeter will not indicate battery voltage until battery bus supply and voltmeter circuit breakers are in.
- Flight operation can be maintained without battery and generator. Instruments powered by the 28 Vdc power, however, will be inoperable.

14.23.2 Electrical Fire — Known Origin

Procedures:

*1. Affected equipment — Secure.

*2. Affected circuit breakers — Pull.

If fire persists:

*3. Electrical Fire — Unknown Origin procedure — Execute.

If fire extinguishes:

4. Land as soon as practical.

14.24 SMOKE AND FUME ELIMINATION

Indications:

Fumes in cockpit.

Smoke in cockpit.

Equipment failure.

Procedures:

*1. ECS and DEFOG blower — OFF.

*2. Vents/windows — Open.

*3. Slip or skid aircraft to eliminate smoke and fumes.

*4. Land as soon as possible.

14.25 HYDRAULIC SYSTEM MALFUNCTIONS

The emergency procedure for hydraulic failure, when AFCS is being used, is the same as the procedure without AFCS; however, with force trim and AFCS ON, the workload necessary to maintain required control is greatly reduced. The aircraft can best be flown when attitude and power adjustments are made smoothly, gradually, and in small increments. IFR speeds of 70 to 90 knots can easily be managed with no hydraulics if force trim and AFCS are ON. For landing with a hydraulic malfunction, the ALT mode of the AFCS shall be disengaged.

Note

Odd or unusual stick forces will be felt in a boost–off situation. Because of excessive forces required for control manipulation, a shallow approach with a sliding landing is recommended.

14.25.1 Hydraulic System Failure

Indications:

HYDRAULIC PRESSURE light.

Increased force required for control movement.

Feedback in control.

Procedures:

1. Airspeed — Adjust (to obtain most comfortable control movement level).
2. HYDRAULIC BOOST switch — Check ON.
3. HYD BOOST circuit breaker — Pull.

If system is restored:

4. Land as soon as practical.

If system is not restored:

5. HYD BOOST circuit breaker — In.
6. HYDRAULIC BOOST switch — OFF.
7. FORCE TRIM (FT) — ON.

(C) 8. AFCS STAB — ON.

(C) 9. AFCS ALT — OFF.

10. Land as soon as practical.

14.25.2 Hydraulic Power Cylinder Malfunction

Indications:

Cyclic/collective control displaces to abnormal position.

Pilot control of cyclic/collective is difficult or impossible.

Procedures:

*1. HYDRAULIC BOOST switch — OFF.

WARNING

Hydraulic system will not secure if HYD BOOST circuit breaker is out.

*2. Helicopter — Regain control.

*3. Airspeed — Adjust (to obtain most comfortable control movement level).

*4. Land as soon as possible.

WARNING

In the event of a complete loss of electrical power in the TH–57B or a failure of the ESS No. 2 bus in the TH–57C, the hydraulic system will reenergize in the malfunction mode. The pilot will be unable to override the hydraulic boost solenoid.

14.26 HIGH–FREQUENCY VIBRATION

High–frequency vibrations are too fast to count and may be manifested as a buzz in the pedals. These vibrations may come from the engine or accessory gearbox components, improper drive shaft alignment, malfunctioning couplings, dry or excessively worn bearings, or an out–of–track or damaged tail rotor. If the vibration is associated with a malfunctioning tail rotor, the time from onset of vibration to complete loss of tail rotor thrust may be extremely limited. Recognition of suspected failure of the tail rotor drive system relies heavily on pilot judgment. Indications of impending failure include, but are not limited to, sudden increase in amplitude of vibrations, unusual noises, and illumination of T/R CHIP caution light.

Procedures:

*1. ECS — OFF.

If vibrations continue:

*2. Land as soon as possible.

WARNING

- Be prepared to execute Complete Loss of Tail Rotor Thrust procedures.
- Increased power settings required to accomplish a normal approach may ultimately precipitate the complete failure of a malfunctioning tail rotor. Be prepared for uncommanded right yaw in the event of complete loss of tail rotor thrust during the approach. Consideration should be given to maintaining an autorotative profile or low–powered approach.

If vibrations cease:

3. Land as soon as practical.

14.27 JAMMED FLIGHT CONTROLS AND OTHER FLIGHT CONTROL MALFUNCTIONS

Aircraft experiencing a control malfunction during ground operations will be inspected immediately by qualified technicians prior to further flight operations or continued turnup/maintenance action. If jammed or restricted flight controls are experienced on the ground by a pilot or maintenance personnel, no attempt shall be made to free the controls. Light pressure shall be held against the restriction or jam while a thorough inspection of the flight control system is being conducted.

Pilots of aircraft that have just returned from a flight during which a control malfunction was experienced will request an immediate flight control system inspection.

14.28 UNCOMMANDED RIGHT ROLL DURING FLIGHT BELOW 1G

Indications:

Uncommanded right roll.

Reduced cyclic effectiveness.

Procedures:

*1. Cyclic — Immediately apply aft to establish positive g load on rotor, then center laterally.

WARNING

Lateral cyclic is decreasingly effective below 1g and increases main rotor flapping, which can result in mast bumping.

When main rotor returns to a positive thrust condition:

*2. Controls — As required to regain balanced flight.

If mast bumping has occurred:

*3. Land immediately.

14.29 ROTOR BLADE STALL

Indications:

Progressively increasing two-per-revolution vibrations.

Loss of longitudinal control and severe feedback in the cyclic.

Violent vertical nose oscillations independent of cyclic position.

Procedures:

Recovery may be accomplished by one or a combination of the following:

*1. Severity of maneuver — Decrease.

*2. Collective pitch — Decrease.

*3. Airspeed — Decrease.

*4. Altitude — Descend, if flight permits.

*5. Rotor rpm — Increase.

WARNING

Entry into severe blade stall can result in structural damage to the helicopter which could lead to loss of aircraft, injury, or death.

14.30 VORTEX RING STATE

Indications:

Rapid descent rate increase.

Increase in overall vibration level.

Loss of control effectiveness.

Procedures:

*1. Collective — Decrease.

*2. Cyclic — Forward to gain airspeed.

WARNING

Increasing collective has no effect toward recovery and will aggravate vortex ring state. During approaches at less than 40 KIAS, do not exceed 800 feet per minute descent rate.

If impact is imminent:

*3. Level skids to conform to terrain.

14.31 TAIL ROTOR FAILURE AND DIRECTIONAL CONTROL MALFUNCTIONS

Helicopter pilots should avoid placing all tail rotor malfunctions and their corrective actions into a single category. Because of the many different malfunctions that can occur, it is not possible to provide a solution for every conceivable emergency. The ability to analyze the situation in a timely manner and select the proper emergency procedures to bring about a successful outcome requires forethought and discussion. It is equally as important to anticipate how the helicopter will react as it is to know the procedure. Tail rotor problems can be sudden or insidious in nature. The loss of components or airframe structure may aggravate the center of gravity/pitch control and eliminate controllability entirely. Once vibrations, noises, yaw kicks, or other symptoms indicate the potential for tail rotor failure, minimizing power required may be the best solution for extending flight with respect to time aloft.

There are four basic types of tail rotor malfunctions, which are covered in the following paragraphs. Of the basic types, the pilot can make some generalizations: in the case of right rotations, a low-powered approach or autorotation is the most likely course of action; and in the case of left rotations, a powered approach will usually be possible. A controllability check at cruise flight should be performed determining what torque is required for balanced flight. A high-torque setting (above hover power) will usually indicate a stuck left situation, and a low-torque setting (below hover power) will usually indicate a stuck right situation.

14.31.1 Complete Loss of Tail Rotor Thrust

This situation involves a break in the drive system, such as a severed driveshaft, or damage to/loss of the tail rotor, where thrust produced is minimal or nonexistent.

Indications:

1. Pedal input has no effect on helicopter trim.
2. Right yaw (left sideslip).
3. Left roll of fuselage along the longitudinal axis.
4. Loud bang.

Delayed-Onset Indications:

1. High frequency vibrations.
2. Whining, grinding.
3. Yaw kicks, often during power changes.
4. Restricted or difficult movement of pedals.
5. Unusual pedal positions.

Procedures:

In a hover:

*1. Twist grip — Flight idle.

*2. Cyclic — Eliminate drift.

*3. Collective — Increase to cushion landing.

Transition to forward flight or hover/air taxi:

*1. Twist grip — Flight idle.

*2. Cyclic — Eliminate sideward drift.

*3. Collective — Increase to cushion landing.

At altitude:

*4. Autorotate.

If yaw is not controllable:

*5. Twist grip — Flight idle immediately.

If yaw is controllable:

*6. Continue powered flight and set up to a suitable landing area at or above minimum rate of descent autorotational airspeed.

WARNING

- Autorotation may be the safest option. Attempting to control a loss of tail rotor thrust in powered flight requires considerable skill and may result in loss of aircraft control.
- Airspeed indications during side-slip are unreliable. At airspeeds below approximately 50 knots, the side-slip may suddenly become uncontrollable, and the helicopter will begin an unrecoverable vertical axis “flat spin”.

WARNING

If attempting to achieve higher airspeeds, care must be taken to avoid excessive cyclic inputs coupled with large power settings that could lead to mast bumping or rapid nose tucking.

Note

- Depending on the nature of the failure and degree of damage, airspeeds between 50-72 KIAS may provide the best opportunity to maintain level flight.
- A non-typical nosedown attitude may be required to achieve a desired airspeed due to increased drag on the tail.
- Turns to the right may provide greater controllability of airspeed and potentially minimize altitude loss.
- Banking to the left will aid in counteracting torque.

*7. Autorotate.

*8. Twist grip — Rotate to flight idle prior to touchdown.

WARNING

- In the autorotation, maintain airspeed above minimum rate of descent airspeed until flare to avoid loss of yaw control.
- Once the engine is secured, in the absence of torque, the lift produced by the vertical fin may tend to yaw the nose to the left at faster speeds. As airspeed slows and N_r decays, the decelerating rotorhead and swashplate friction will create additional left yaw, increasing the chance for rollover. Depending on landing profile, consideration should be given to leaving twist grip open until pulling collective at the bottom of the autorotation to allow control of yaw with twist grip.

14.31.2 Fixed Pitch Right Pedal (Low Power)

Probable causes:

Pedals locked in fixed position because of FOD.

Control linkage failure during a right-pedal applied situation.

Helicopter reaction:

The pilot will be unable to control right yaw with pedal input. If power is increased, it will tend to aggravate the degree of yaw or sideslip.

Procedures:

In a hover:

If rate of rotation is not excessive and landing surface is smooth and firm:

*1. Collective — Decrease to effect a power-on landing.

If rate of rotation is excessive or landing surface is unsuitable for a power–on landing:

*2. Twist grip — Reduce as nose approaches windline.

*3. Cyclic — Eliminate drift.

*4. Collective — Increase to cushion landing.

At altitude:

1. Maintain airspeed and engine rpm to streamline the aircraft.
2. Plan an approach to a smooth level surface into the wind or with a slight left crosswind if possible.
3. Establish a shallow approach, maintaining 60 KIAS until on final.

Note

In such an approach profile, it is not unusual for the nose to be yawed slightly to the left.

4. At 50 to 75 feet AGL and when the landing area can be made, start a slow deceleration to arrive over the intended landing point with minimum forward speed required for directional control.
5. At approximately 2 to 3 feet skid height, increase collective to slow the rate of descent and coordinate twist grip to maintain nose alignment.

WARNING

If necessary, a waveoff should be made early in the approach, using cyclic to increase forward airspeed. If it becomes necessary to use large collective inputs to waveoff near the deck, the nose will yaw right and possibly enter uncontrolled flight.

Note

If nose swings right after touchdown, follow the turn with cyclic to prevent the aircraft from rolling over.

14.31.3 Fixed Pitch Left Pedal (High Power)

Probable causes:

Pedals locked in fixed position because of FOD.

Control linkage failure during a left–pedal applied situation.

Helicopter reaction:

The pilot will be unable to control left yaw with pedal input. If power is decreased, it will tend to aggravate the degree of yaw or sideslip.

Procedures:

In a hover:

If rate of rotation is not excessive and landing surface is smooth and firm:

*1. Collective — Decrease to effect a power–on landing.

If rate of rotation is excessive or landing surface is unsuitable for a power–on landing:

*2. Twist grip — Slowly reduce while increasing collective to stop rotation.

*3. Collective — Coordinate with twist grip to maintain heading and allow aircraft to settle.

At altitude:

1. Maintain airspeed and engine rpm to streamline the aircraft.
2. Plan an approach to a smooth, level surface into the wind or with a slight left crosswind if possible.
3. Establish a normal approach and maintain 60 KIAS during the initial part of the approach.
4. On final approach, maintain engine rpm within limits and begin a slow deceleration in order to arrive at a point approximately 2 feet above the intended touchdown area as effective translational lift is lost.
5. Apply collective pitch to slow the rate of descent and align the helicopter with the intended landing path. If the aircraft is not aligned after pitch application, adjust the twist grip to help further with the alignment. Allow the aircraft to touch down at near zero groundspeed maintaining alignment with the twist grip.

Note

In a fixed–pitch left–pedal situation, it may be possible for the pilot to slow the aircraft to a hover and effect such a recovery.

14.31.4 Loss of Tail Rotor Effectiveness

Probable causes and helicopter reaction:

See paragraph 11.11.

Procedures:

*1. Pedals — Maintain full left pedal.

*2. Collective — Reduce (as altitude permits).

*3. Cyclic — Forward to increase airspeed.

If spin cannot be stopped:

*4. Autorotative landing — Execute.

14.32 SINGLE INSTRUMENT INDICATIONS

If a DC powered instrument fails, check for a popped circuit breaker. If operation is restored, by resetting the circuit breaker, flight may be continued.

14.32.1 N_g Tachometer or Turbine Outlet Temperature System

If N_g or TOT falls to zero or fails to rise and fall with corresponding power changes:

1. Monitor other engine instruments.
2. Avoid high power settings.
3. Land as soon as practical.

Note

Failure of the N_g tachometer generator is usually accompanied by actuation of the ENG OUT warning horn and caution light.

14.32.2 Torquemeter

If the torquemeter needle is unusually low or falls to zero with a corresponding digital readout, it is probable that the torque line has ruptured. A restrictor fitting in the wet line will slow the rate of engine oil loss, but will not stem the flow.

Procedures:

*1. Monitor engine instruments.

*2. Land as soon as possible.

The torquemeter incorporates a transducer between the wet line and the gauge. If the needle falls to zero and the digital readout is extinguished, the cause is a loss of electrical power to the indicator.

Procedures:

1. Monitor engine instruments.
2. Check TRQ circuit breaker — In.

If circuit breaker resets:

3. Flight may be continued.

If circuit breaker was not popped or does not reset:

4. Land as soon as practical.

Note

Some minor torque fluctuation is normal and should not be cause for concern.

14.32.3 Engine or Transmission Oil Pressures

On ground:

The engine shall be shut down if transmission oil pressure exceeds 70 psi or engine oil pressure exceeds 150 psi.

Airborne:

If either gauge fluctuates erratically, engine oil pressure does not indicate within normal range, or transmission oil pressure is not within 30 to 70 psi:

*1. Land as soon as possible.

WARNING

With suspected transmission malfunctions, the pilot should make an approach with minimum power change to minimize changes to transmission torque.

Note

- Check the transmission oil pressure with the twist grip full open. Illumination of the TRANS OIL PRESS caution light is common, while the twist grip is at flight idle; however, the gauge should indicate positive transmission oil pressure.
- There is no detrimental effect to the transmission system with oil pressure between 50 to 70 psi with transmission temperature within limits. Pressure indications between 50 to 70 psi shall be documented on a MAF upon completion of flight.

14.32.4 Engine or Transmission Oil Temperatures

If either oil temperature gauge indicator exceeds red line limitations:

*1. Land as soon as possible.

If either oil temperature gauge fluctuates or falls to zero:

*2. Land as soon as practical.

14.32.5 N_r and N_f Tachometer Malfunction

If the tachometer indications fluctuate erratically or peg and all other instruments and lights are normal, land as soon as practical, utilizing the remaining engine and performance instruments to monitor flight performance.

Note

Failure of the N_r tachometer generator will normally be accompanied by the actuation of a steady warning horn and the ROTOR LOW RPM caution light.

14.32.6 Pitot–Static Instruments

If the airspeed, vertical speed, or altimeter fluctuates erratically or gives apparently false indications while power and attitude instruments are normal, proceed as follows:

*1. PITOT HEAT switch(es) — HEAT.

Monitor cruise power settings and nose attitudes to maintain altitude and airspeed. If pitot heat does not remedy the situation, accomplish the following:

(C) *2. Alternate static source knob — Pull.

If icing conditions are present:

*3. Icing procedures — Execute.

If icing conditions are not present:

*4. Land as soon as practical.

14.32.7 Gyro Instruments

If the directional or attitude gyro precesses or otherwise malfunctions, shift the scan to the standby compass (directional gyro malfunction) or to a partial panel scan utilizing other flight instruments to maintain heading, airspeed, and altitude (attitude gyro malfunction). If IFR, attempt to reestablish VMC conditions. Remain VFR and continue the flight. Report the discrepancy upon return to base.

WARNING

TH–57B control/trim characteristics prohibit safe instrument flight. If inadvertently IMC, regain VMC as expeditiously as possible.

14.32.8 Fuel Quantity Indicator

If the fuel quantity indicator drops to zero or fluctuates, utilize elapsed time to judge available remaining fuel. Land as soon as practical.

14.33 EMERGENCY DESCENT

Procedures:

*1. Collective — Reduce (to minimum pitch).

*2. Airspeed — 130 KIAS (122 KIAS Maximum with AFCS on).

Note

During recovery, N_r may tend to overspeed.

14.34 LOST PLANE PROCEDURES

The primary requirements when lost are as follows:

1. Confess.
2. Climb.
3. Conserve.
4. Communicate.
5. Conform.
6. Consult local area maps for landmarks.
7. Land if necessary and ask available persons for information.

14.35 INADVERTENT ENTRY INTO INSTRUMENT METEOROLOGICAL CONDITIONS

14.35.1 Single Helicopter Inadvertent IMC Procedure

1. Establish an instrument scan and balanced flight.
2. Turn away from and/or climb above known obstacles of immediate concern.
3. Regain VMC if able.

WARNING

Entry into an unusual attitude has proven to be likely during inadvertent IMC entry. This is due to spatial disorientation resulting from bank angle control reversal error and the physiological tendency to apply aft cyclic and decelerate upon entry.

If unable to regain VMC:

4. ATC Notify and gain IFR clearance if necessary.

WARNING

Both pilots shall ensure that the aircraft is stable in IMC before attempting to reference approach plates or coordinate with air traffic control or spatial disorientation and unusual attitude may result.

14.35.2 Two Helicopters

When inadvertently encountering IMC:

1. Either aircraft can transmit inadvertent IMC.
2. Lead shall transmit the flight's base altitude and heading.
3. Wingman shall turn away from the flight, terrain permitting, transmitting direction of turn while passing through the 90° position relative to the base heading.
4. After receiving wingman's 90° call, lead shall turn in the opposite direction, terrain permitting.
5. Both aircraft will roll out 170° off base heading.
6. The flight will regroup in a clear area.

14.35.3 Four Helicopters

If inadvertent IMC flight should occur while in a formation flight and the lead aircraft is lost from sight or upon command of the lead, immediately take the following action (Figure 14-1):

1. Aircraft numbers two and four will commence a standard rate turn away from the flight. They will call passing through 90° of turn and will turn 170°.
2. Aircraft number three will climb 500 feet on the present heading. After completing the climb, the aircraft will reverse heading 170° away from the flight leader. When aircraft number four reports passing through the 90°, upon completing the reversal turn, descend to the initial altitude.
3. The flight leader, upon receiving the radio call of aircraft number two passing through 90° of turn, will reverse course 180° on the same side as aircraft number two.
4. It is essential that all aircraft maintain the airspeed of the flight when the dispersal was commenced. The flight will regroup when in a clear area.

14.36 ENVIRONMENTAL CONTROL SYSTEM MALFUNCTIONS

An ECS malfunction is normally indicated by a medium–frequency vibration accompanied by a rumbling or grinding noise from the engine compartment. It is caused by a compressor malfunction or improper belt tension.

Procedures:

1. AIR COND/FAN switch — OFF.
2. Land as soon as practical.

14.36.1 Heater Malfunction

Indications:

DUCT TEMP HIGH caution light illuminated.

Procedures:

1. CABIN HEAT valve — OFF.
2. AIR COND/FAN switch — FAN.
3. HI/FAN/LO switch — HI.

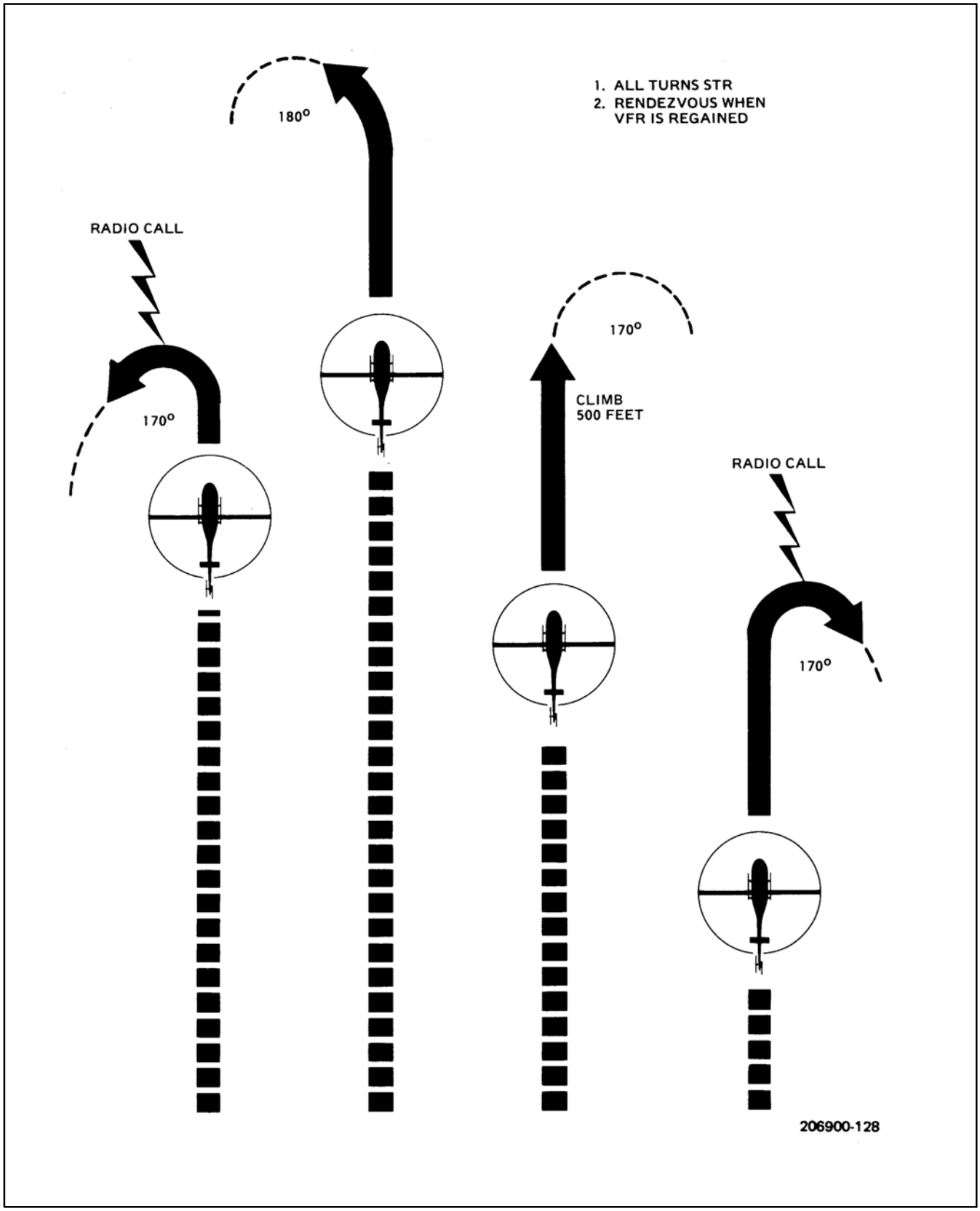

Figure 14-1. Lost Sight Dispersal — Inadvertent Instrument Meteorological Conditions

If light extinguishes:

4. Continue flight.

If light does not extinguish:

5. Land as soon as practical.

14.37 ICING

Operation of the engine during icing conditions could result in ice formations on the compressor front support. If ice were allowed to build up, airflow to the engine would be affected and engine performance decreased. Every effort must be made to remain clear of known icing conditions. The anti–ice system in this helicopter is to be used as a preventative measure only. Once ice has accumulated, the anti–ice system cannot be used as a corrective measure (will not deice). Intentional flight in any known icing condition (<4 °C in visible moisture) is prohibited. For inadvertent flight in icing conditions, proceed as follows:

Procedures:

*1. ENG ANTI–ICING — ON.

*2. PITOT HEAT switches — HEAT.

(C) *3. Alternate static source knob — As required.

*4. Descend or climb to a warmer temperature or vacate clouds/moisture.

If unable to get clear of icing conditions:

*5. Land as soon as possible.

WARNING

Monitor engine instruments and be prepared for partial or complete power loss.

14.38 ICS/RADIO SELECTOR PANEL FAILURE

This failure will be manifested by loss of sidetone and ability to transmit or receive. To regain radio reception, proceed as follows:

(C) 1. Audio NORM/EMER switch — EMER.

(C) 2. Audio control panel — Depress appropriate top row mixer switch to regain transmit–receive capability (there will be no sidetone in this model).

3. Land as soon as practical.

Note

No sidetone will be evident.

In the TH–57C, an alternate method of regaining operation is available by swapping pilot and copilot audio plug and using the ICS/RADIO switch on the other cyclic. The person in the other seat may then monitor radio reception with the opposite audio NORM/EMER switch in EMER.

CHAPTER 15

Landing Emergencies

15.1 AUTOROTATION

A safe autorotative approach and landing is dependent upon variables such as pilot capability, density altitude, airspeed, gross weight, proximity of suitable landing area, and wind direction and velocity. This does not preclude operation in the restricted height velocity area during emergencies or pressing operational requirements. Heading is maintained by applying right pedal to decrease the tail rotor thrust. Autorotative rotor rpm will vary with ambient temperature, pressure altitude, g loading, and gross weight. High gross weights, increased g loads, and higher altitudes and temperature will cause increased rotor rpm that can be controlled by increasing collective. Do not exceed 100 KIAS in sustained autorotation. Selecting the appropriate airspeed in balanced flight may significantly affect glide distance during an autorotative decent, impacting survivability during an engine-out situation. N_r should be maintained in limits throughout the maneuver (94-95 percent is optimum).

Note

Avoid abrupt control movement during high-speed autorotation to prevent overcontrolling.

Any increase of rotor rpm, above that specified for maximum glide, will result in increased rate of descent. At an altitude of 75 to 100 feet, a flare should be established by moving the cyclic stick aft. This will decrease both airspeed and rate of descent and cause an increase in rotor rpm that is dependent upon the rate at which the flare is executed. Increased rotor rpm is desirable because more energy will then be available to the main rotor when collective is applied. Sites for autorotative landings should be hard, flat, smooth surfaces clear of approach and rollout obstructions. During landing, the helicopter should be held in skids-level attitude. After touchdown, decrease collective slowly to full down. To minimize ground speed on touch down, autorotative landings should be made into the wind to the maximum extent possible, however at no time should establishing a headwind take precedence over a suitable landing site.

Note

The best glide airspeed is 72 KIAS. The minimum rate of descent airspeed is 50 KIAS.

Procedures:

*1. Autorotate.

*a. Autorotation — Establish.

*(1) Collective — Full down immediately.

*(2) Pedals — Center ball.

*(3) Airspeed — 50 KIAS minimum rate of descent, 72 KIAS maximum glide range.

*(4) N_r — Maintain between 90 to 107 percent (94 to 95 percent optimum).

*(5) Heading — Turn into wind or toward best landing area.

*b. Autorotative landing — Execute.

*(1) Cyclic — Flare as required (to reduce rate of descent and groundspeed).

*(2) Collective — Increase as required (to cushion landing).

*(3) Cyclic — Level skids prior to touchdown.

15.1.1 Landing in the Trees

An autorotation into a heavily wooded area should be accomplished by executing a normal autorotation and full flare. The flare should be executed so as to reach a zero rate of descent and zero groundspeed as close to the top of the trees as possible. As the helicopter settles, increase collective to maximum.

*1. Autorotate.

*2. Shoulder harness — Lock.

If time and altitude permit:

*3. Mayday — Transmit.

*4. Transponder — Emergency.

*5. Twist grip — Close.

*6. Battery — OFF.

CHAPTER 16

Emergency Egress/Survival Procedures

16.1 EMERGENCY EXITS AND ENTRANCES

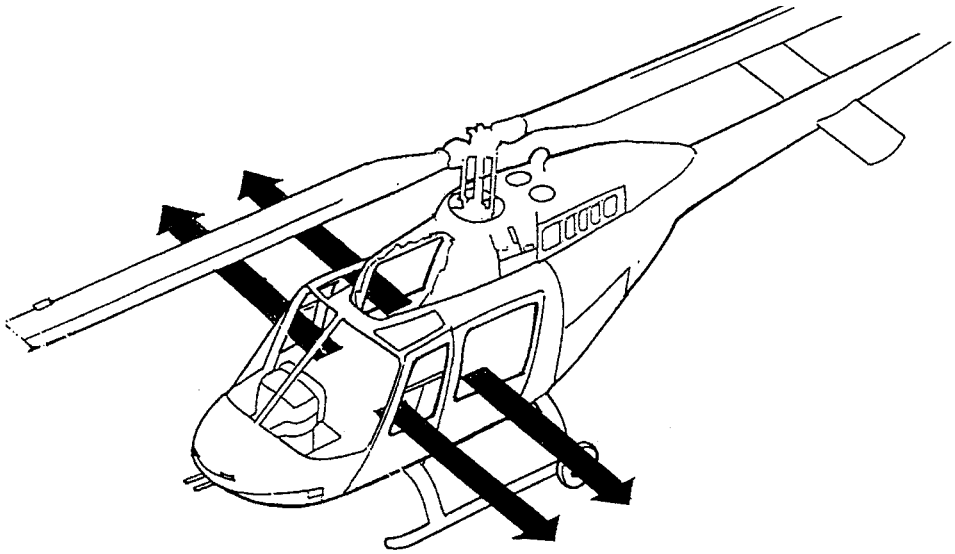

16.1.1 TH–57B/C Door Handles

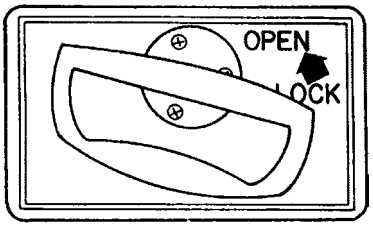

Rotate door handle counterclockwise and push door outward to open.

16.1.2 TH–57B/C Door Emergency Jettisoning Handles

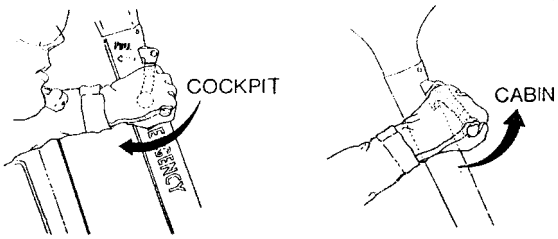

Actuate handle and push down and outward to jettison.

WARNING

- Inadvertent jettisoning of cockpit doors is possible if jettison handle is utilized as a handhold or handrest during flight.
- Use extreme caution when jettisoning left side cabin doors to prevent damage to the tail rotor.

16.2 EMERGENCY EGRESS

16.2.1 Emergency Ground Egress

WARNING

During any emergency egress, particular care must be taken to avoid being struck by the rotor blades.

16.2.1.1 Pilot/Copilot

*1. Abandon aircraft — Order.

*2. Mayday — Transmit.

*3. Doors — Open/jettison.

*4. Communications cord — Disconnect.

*5. Lap/shoulder harness — Release.

*6. Egress through appropriate exit.

16.2.1.2 Crew/Passengers

*1. Doors — Open/jettison.

*2. Seat harness — Release.

*3. Egress through appropriate exit.

16.3 EMERGENCY LANDING

Note

Detailed crash/ditching brief shall be part of every prebrief, especially for passengers.

16.3.1 Preparation for Emergency Landing

16.3.1.1 Crash Position

The risk of personal injury during an autorotative landing or ditching can be significantly reduced by properly positioning oneself for the landing. Aircrew should sit erect with head firmly against the headrest, elbows tucked in tightly, hands in lap, and feet flat on the deck.

16.3.2 Emergency Landing (Pilot/Copilot)

1. Crew and passengers — Alert.
2. Shoulder harness — Locked.

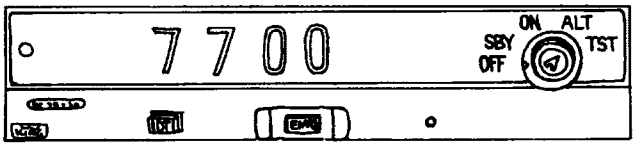

3. Mayday/IFF — Transmit/Emer (7700).
4. Emergency landing — Execute.
5. After landing:
   a. Secure and exit.
   b. Rotors — Avoid.

WARNING

Conditions permitting, delay egress until rotors have stopped.

   c. Muster at prebriefed point outside aircraft.
   d. With hand–held radio, declare an emergency on guard frequency and/or activate beacon function as required.

16.3.3 Emergency Landing (Crew/Passengers)

1. Shoulder harness — Locked all stations.
2. Brace for impact.
3. After landing:
   a. Seat harness — Release.
   b. Egress through appropriate exit.
   c. Rotors — Avoid.

WARNING

Conditions permitting, delay egress until rotors have stopped.

   d. Muster at prebriefed point outside aircraft.

16.3.4 Ditching

16.3.4.1 Ditching — Power On

Once the decision has been made to ditch:

1. Passengers and crew — Alert.
2. Shoulder harness — Locked.
3. Mayday — Transmit.
4. Transponder — Emergency.
5. Perform normal approach to hover/taxi 3 to 5 feet above the water.
6. Doors — Jettison.
7. Nonessential personnel — Execute emergency egress.
8. Helicopter — Move to a safe distance away.
9. Vertical landing — Perform.
10. Twist grip — Close.
11. Collective — Increase slowly to maximum pitch.
12. Cyclic — Maintain helicopter upright as long as possible.
13. (C) Rotor brake — Engage.
14. Underwater egress — Execute.

16.3.4.2 Ditching — Power Off

*1. Autorotate.

*2. Shoulder harness — Lock.

If time and altitude permit:

*3. Mayday — Transmit.

*4. Transponder — Emergency.

*5. Doors — Jettison.

WARNING

- Use extreme caution when jettisoning left side cabin doors to prevent damage to the tail rotor.
- Do not abandon helicopter until rotor blades have stopped. Do not inflate lifevest until well clear of the helicopter.

*6. Underwater egress — Execute.

16.3.5 Underwater Egress

*1. HABD — As required.

*2. ICS cords — Disconnect.

*3. Doors — Jettison.

*4. Place hand on known reference point.

*5. Harness — Release.

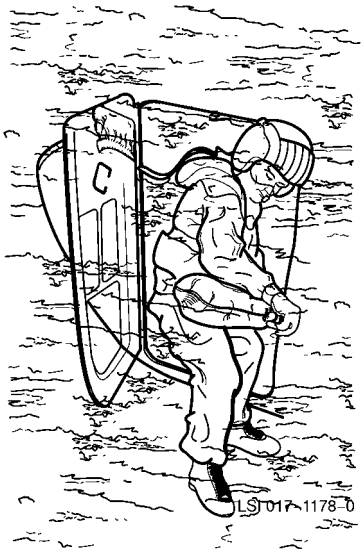

*6. Exit helicopter.

After egress:

*7. Swim clear of helicopter and inflate LPU.

WARNING

- Do not inflate LPU until outside helicopter.
- Water pressure may prevent opening the doors until the cabin fills with water.
- Failure to disconnect ICS cords can impede egress.
- If entanglement or disorientation delays egress, hold onto a reference point with one hand. Using the other hand, place HABD in your mouth, clear water from your mouthpiece, and continue with egress.
- To prevent injury while ascending to the surface and breathing from the HABD, continually exhale to vent the expanding air from your lungs.
- Orientation of the HABD is critical. It must angle away from the crewmember's head. Otherwise, during a crash, the head may impact the HABD, causing serious injury and/or incapacitation.

Note

If time does not permit placing HABD in your mouth before submerging, attempt emergency egress while holding your breath.

16.4 HELICOPTER AIRCREW BREATHING DEVICE

The HABD provides approximately 2 minutes of compressed breathing air at moderate depths and exertion levels. Lower breathing rates extend useful time and higher rates will decrease useful time.

Note

The HABD should be worn by all crewmembers and passengers for overwater flights.

PART VI

All-Weather Operations

Chapter 17 — All-Weather Operations

CHAPTER 17

All-Weather Operations

17.1 INTRODUCTION

The function of this chapter is to provide information relative to operation under conditions of instrument flight including night flight, cold-weather procedures, mountainous terrain, etc. This chapter does not include equipment descriptions, as this information is covered in Part I.

Note

Because of the inherent instability of helicopter flight, the possibility of vertigo caused by sideward motion or oscillation is a more prevalent hazard during night and instrument flight than it is in fixed-wing aircraft.

17.2 CREW MANAGEMENT

17.2.1 Duties of Flying Pilot

The pilot flying the helicopter shall devote his attention to the actual control of the aircraft. The first pilot should coordinate the activities of the copilot in the accomplishment of navigational tasks such as tuning navigation radios and plotting aircraft position. The first pilot should assign the copilot other duties as he sees fit to ensure the accomplishment of the mission.

17.2.2 Duties of Nonflying Pilot

The copilot should, without instructions from the pilot, operate communications radios, copy clearances, monitor flight and engine instruments, and, when instructed by the first pilot, tune navigation radios. The copilot should be cognizant of the aircraft position at all times. The copilot shall accomplish any other tasks assigned by the pilot that relate to the safe and efficient operation of the aircraft.

Note

Voice communication duties shall be briefed by the first pilot.

17.3 INSTRUMENT FLIGHT PROCEDURES

The TH-57C helicopter is capable of normal operation on airways under instrument flight conditions and standard approaches to minimums established for conventional aircraft. Instrument flight has no effect upon the range of the helicopter except that the winds encountered at cruising altitude are usually greater than winds near the surface. The requirement for an alternate airport will reduce the tactical range. As with all instrument flying, careful preflight planning is mandatory. Except for some repetition necessary for emphasis or continuity of thought, this section contains only those procedures and techniques that differ from, or are in addition to, the normal operating procedures covered in other sections. Refer to the NATOPS Instrument Flight Manual (NAVAIR 00-80T-112) for detailed instrument flight procedures.

17.3.1 Required Equipment

Refer to paragraph 4.18.

17.3.2 Simulated Instrument Flight

Safety precautions and detailed procedures for conducting simulated instrument flights are contained in OPNAVINST 3710.7 series.

17.3.3 Start

Complete normal exterior inspections and Preflight/Start checklist items, paying particular attention to proper operation of flight instruments, navigation equipment, external and internal lighting, windshield defogging, pitot heat, engine anti-ice, generators, inverters, and AFCS.

17.3.4 After Engine/Rotor Start

1. Defogging system — Check. Utilize as required.

CAUTION

Ensure heat is not applied against windshield too rapidly, as there is a danger of cracking.

2. Standby magnetic compass (two) — Check for current deviation card for each.
3. Exterior lights — As required.

17.3.5 Instrument Takeoff

If visibility permits a normal hover, the takeoff may be accomplished using normal takeoff procedures, with reference to flight instruments to provide a smooth transition from VMC to IMC flight.

When a normal hover is not possible (e.g., precipitation, low ceilings, night, low visibility from blowing snow or dust), the helicopter may be flown off the deck and into a normal climb without any outside reference.

1. With helicopter positioned for takeoff, cross-check runway heading and heading indicator.
2. Utilizing outside references to avoid undesired sliding of aircraft, raise collective until aircraft is light on the skids. Stabilize momentarily and trim out all control forces.
3. Switch to an instrument scan and simultaneously increase collective smoothly to a torque reading of 5 percent above hover torque.
4. As the aircraft leaves the ground, smoothly displace the cyclic forward to assume a 3° to 5° nosedown attitude on the attitude indicator; obtain wings level.
5. Maintain directional control with pedals until airspeed reaches 65 knots. Adjust pedals for balanced flight passing through 65 knots.

Note

Airspeed indicator is unreliable at airspeeds less than 40 KIAS.

6. Smoothly accelerate up to a minimum of 70 KIAS and maintain a positive rate of climb of at least 500 feet per minute with reference to airspeed indicator, altimeter, and vertical speed indicator.

Note

Climbing turns should be limited to a maximum of 20° angle of bank.

7. When climbing to altitude, utilize best climb performance in accordance with climb charts.

17.3.6 Instrument Climb

This helicopter handles well in climbs and climbing turns at the recommended climb airspeed of 70 to 80 KIAS.

Note

If the attitude indicator malfunctions while flying on instruments, rate of climb should be maintained below 500 fpm.

17.3.7 Instrument Cruise Flight

Maintain climb power during level-off until aircraft has accelerated to desired cruise airspeed, then adjust power to maintain cruise airspeed. Upon establishing desired cruise airspeed, the attitude indicator should be checked for nose level indication; thereafter, any pitch or bank corrections should be made utilizing the attitude indicator.

Note

Because of turbulence, slower airspeeds than those recommended for maximum range may be necessary. Recommended turbulence penetration airspeed is 80 KIAS when encountering moderate turbulence to reduce airframe stress and provide for easier aircraft control. Particular attention should be given to navigation because the slow airspeed associated with helicopters will result in large drift angles.

17.3.8 Level-Off Checklist

1. Check OAT and engage anti-ice and pitot heat as required.
2. Check engine rpm and power for desired airspeed.
3. Attitude gyros display accurate information when cross-checked with other performance instruments.
4. Check heading indicator and magnetic compass for continuity.
5. Engine and transmission instruments within limits, caution panel checked.
6. Compare airspeed indicators and barometric altimeters for differences.
7. Write down fuel quantity and time.
8. Activate flight plan if required.
9. Compute ETA at clearance limit based on actual takeoff time.

17.3.9 Speed Range

Speed limitations for various weights, altitudes, and rotor rpm are outlined in Part I. Under instrument flight conditions, these upper limits should be approached with caution and only under conditions of very smooth air. A minimum speed of 65 KIAS shall be observed.

Note

Under instrument conditions, particularly at night, through conditions of reduced visibility, unnecessary operation of the anticollision light should be avoided to prevent vertigo from reflections.

17.3.10 Electronic Equipment

Radio and navigation equipment are operated in the normal manner.

17.3.11 Holding

A recommended airspeed of 80 KIAS can easily be maintained in a normal holding pattern.

Note

Drift correction angles of 30° are not uncommon to a helicopter.

17.3.12 Descent

En route descents are made by reducing power until the desired rate of descent is accomplished. En route descents are normally made at cruising airspeed.

17.3.13 Instrument Approaches

Instrument approaches are easily flown in this helicopter and are performed using standard instrument approach procedures. An approach speed of 90 KIAS is recommended; however, speeds of between 65 KIAS and V_{ne} may be used at the pilot's discretion. Bear in mind that helicopters operate in approach category A, specifying a maximum IAS of 90 knots. Consult Flight Information Publication (FLIP) publications for maximum IAS when using helicopter instrument approaches.

17.3.14 Instrument Autorotations

In the event of an emergency requiring an autorotative descent while in IMC, proceed as follows:

1. Reduce collective immediately to maintain N_r.
2. Adjust nose attitude for a recommended descent airspeed of 60 KIAS.
3. Turn into last known wind.
4. Once established in the descent, and in balanced flight, make radio call and complete the applicable emergency procedure.
5. Limit angle of bank during autorotation to 30°.
6. If visual contact is made prior to 150 feet AGL, execute normal autorotative landing.
7. If visual contact is not made prior to 150 feet AGL, assume an attitude of 8° to 10° above the horizon on the attitude indicator. At approximately 75 feet AGL, apply up collective as necessary and assume a level attitude to cushion landing.

Note

All altitudes should be measured on the radar altimeter.

17.3.15 Lightning Strikes

Although the possibility of a lightning strike is remote, with increasing use of all-weather capabilities, the helicopter could inadvertently be exposed to lightning damage; therefore, static tests have been conducted to determine lightning strike effects on rotors.

Simulated lightning tests indicate lightning strikes may damage helicopter rotors. The degree of damage will depend on the magnitude of the charge and the point of contact. Catastrophic structural failure is not anticipated; however, lightning damage to hub bearings, blade aft section, trim tabs, and blade tips was demonstrated. Also, adhesive bond separations occurred between the blade spar and aft section between the spar and leading edge abrasion strip. Some portions of blade aft sections deformed to the extent that partial or complete separation of the damaged section could be expected. Such damage can aerodynamically produce severe structural vibration and serious control problems that, if prolonged, could endanger the helicopter and crew.

Metallurgical analysis of aluminum spar rotor blades following an actual in-flight lightning strike has revealed hidden spar annealing. Lightning strike damage can be much more severe than the visually observed damage because of the annealing material. Crack propagation in annealed material could be abnormally rapid, reducing blade fatigue life severely.

WARNING

Avoid flight in or near thunderstorms, especially in areas of observed or anticipated lightning discharges.

If lightning strike is suspected but there are no indications of damage to the helicopter, or if minor damage is suspected, the following precautions are recommended:

1. Reduce airspeed as much as practical to maintain safe flight but keep power on and maintain normal N_r.
2. Proceed to the nearest suitable landing site and descend with partial power, avoiding abrupt control inputs.
3. Advise appropriate control authority of intentions and location.
4. Do not autorotate, but accomplish a precautionary landing and shutdown. Avoid unnecessary delay in landing.
5. Do not resume flight until the aircraft is released by Quality Assurance.
6. Record lightning strike in maintenance forms. In the event severe lightning damage makes the helicopter difficult or impossible to control, make an immediate power-on landing.

17.4 RMI SLAVING PROCEDURES

In the event the RMI has tracked off from the magnetic compass (wings level), perform the following steps:

1. ECS — OFF.
2. Wait approximately 15-20 seconds.
3. Directional gyro slaving adapter — FREE then back to SLAVE.
4. ECS — As required.

Note

- The necessary wait time gives the air conditioning compressor sufficient time to disengage its clutch thereby eliminating the magnetic influence felt by the flux valve.
- On east/west routes, the most influential component on the flux valve is the air conditioning compressor and fan. On north/south routes, the most influential component on the flux valve is the position lights.
- The RMI can track off heading at a rate of one degree per minute under normal operations.
- This process may be repeated.

17.5 COLD-WEATHER OPERATION

17.5.1 Introduction

Operation of the helicopter in cold weather or an arctic environment presents no unusual problems if the pilot is aware of the changes that take place and conditions that may exist because of the lower temperature and freezing moisture. The pilot must be more thorough in the preflight inspection when temperatures have been or are below 0 °C (32 °F).

17.5.2 Engine Servicing

Fuel and oil servicing should be accomplished immediately after engine shutdown to prevent condensation within the tanks because of temperature change. During extreme conditions, install covers after engine shutdown.

17.5.3 Preparation for Flight

Preparation for cold-weather flights should include normal procedures in Part III with the following exceptions or additions: All vents and openings such as fuel vents, battery vents, transmission breather, heater exhaust and intake, and engine air intakes must be checked for ice.

WARNING

Takeoff is prohibited with snow or ice on the helicopter. Accumulations of snow and ice will be removed prior to flight. Failure to do so can result in hazardous flight because of aerodynamic and center-of-gravity disturbances as well as the introduction of snow, water, and ice into internal moving parts and electrical systems. The pilot should be particularly attentive to the main and tail rotor systems and their exposed control linkages.

Snow, slush, or ice shall be removed from any area where jet engines may be operated. Keeping the areas clean will prevent cinders, sand, or chunks of ice from being sucked into the engines or blown at high velocity into other aircraft that might be in the vicinity.

17.5.4 Preheating

Flight and engine controls may be difficult to move after the helicopter has been cold soaked. If the controls are not sufficiently free for a safe start and low-power warmup, have the affected controls thawed by heating. It may also be advisable to apply preheating to other areas such as the engines, transmission, main rotor hub, and cockpit.

Note

When moving the helicopter into or out of a heated hangar where there is an extreme difference in outside temperature, a canopy door should be open slightly to equalize the temperature inside the cockpit. Extremely unequal temperatures on opposite sides of Plexiglas™ can cause differential contraction and breakage.

17.5.5 Before Starting Engine

An auxiliary power unit should be used when available to ensure a smooth, fast engine acceleration to preclude a hot start.

CAUTION

Whenever possible, avoid starting engines on glare ice to avoid the effect of torque reaction when increasing rpm.

Note

Battery starts below -15 °C (+5 °F) are marginal.

17.5.6 Engine Ground Operation

CAUTION

Should the engine fail to accelerate to proper idle speed (cold hangup) or the time from light-off to idle is excessive, abort start.

A sudden loss of oil pressure in cold weather, other than a drop caused by relief valve opening, is usually because of a broken oil line. Shut down and investigate for cause.

17.5.7 Takeoff

Cold weather presents no particular takeoff problem unless the cold weather is accompanied by snow. The problem of restricted visibility because of blowing or swirling snow (from rotorwash) can be acute and may require a maximum power takeoff or perhaps even an instrument takeoff without hover to get the helicopter safely airborne. If the takeoff is surrounded by a large expanse of smooth, unbroken snow, there is a danger the pilot may become disoriented because of the absence of visible ground reference objects. In this case, use available objects for reference, such as oil drums, rocks, bushes, etc.

17.5.8 In Flight

WARNING

- Intentional flight in any known icing condition (less than 4 °C in visible moisture) is prohibited. If icing conditions are encountered during flight, effort should be made to vacate the icing environment immediately.
- Because of the possibility of engine flameout, flight in falling or blowing snow is prohibited.

If icing conditions become unavoidable, the pilot should turn on the pitot heat, windshield defogger, and the engine anti-ice system.

During flights in icing conditions, obscured forward field of view because of ice accumulation on the windshields and chin bubbles may be experienced. One-per-rotor-revolution vibrations, ranging from mild to severe, caused by asymmetrical ice shedding from the main rotor system may be encountered. The severity of the vibration will depend upon the temperatures and the amount of ice accumulation on the blades when the ice shed occurs. The possibility of an asymmetric ice shed occurring increases as the outside air temperature decreases. An increase in torque may be required to maintain a constant airspeed and altitude because of ice accumulation on the rotor system. If flight in icing conditions is continued, it may not be possible to maintain autorotational rotor speed within operational limits should an engine failure occur.

WARNING

Control activity cannot be depended upon to remove ice from the main rotor system. Vigorous control movements should not be made in an attempt to reduce low-frequency vibrations caused by asymmetrical shedding of ice from the main rotor blades. These movements may induce a more asymmetrical shedding of ice, further aggravating helicopter vibration levels.

Note

If the windshield defogger fails to keep the windshield clear of ice, the side windows may be used for visual reference during landing.

17.5.9 Landing

WARNING

Ice shed from the rotor blades and/or other rotating components presents a hazard to personnel during landing and shutdown. Ground personnel should remain well clear of the helicopter during landing and shutdown and passengers/crewmembers should not exit the aircraft until the rotor has stopped turning.

In normal operations, helicopters are often required to land or maneuver in areas other than prepared airfields. In cold weather, this frequently involves landing and taking off from snow-covered terrain. The snow depth is usually less in open areas where there is little or no drift effect. The snow depth is usually greater on the downwind side of ridges and wooded areas. Whenever possible, the pilot should familiarize himself with the type of terrain under the snow (tundra, brush, marshland, etc.).

On all snow landings, anticipate the worst conditions: restricted visibility because of loose whirling snow and an unfirm ice crust under the snow. When loose or powdery snow is expected, make an approach and landing with little or no hover to minimize the effect of rotorwash on the snow. If possible, have some prominent ground reference objects in view during the approach and landing.

WARNING

If visual reference is lost, accomplish a waveoff.

CAUTION

- Whenever possible when landing on glare ice, reduce sink rate as much as practical in order to reduce bending loads on the crosstubes.
- Radio and radar waves can penetrate the surface of snow and ice fields (such as the polar region); therefore, when radio and radar equipment are used for measuring terrain clearance, they may indicate greater terrain clearance than actually exists.

After contacting the surface, maintain rotor rpm and slowly decrease collective pitch, while slightly rotating the cyclic stick until the helicopter is firmly on the ground. Be ready to take off immediately if, while decreasing collective pitch, one landing gear should hang up or break through the crust. Do not reduce rotor rpm until it is positively determined that the helicopter will not settle.

CAUTION

Exercise extreme caution when starting and/or stopping rotors on ice- and snow-covered surfaces to prevent the helicopter from sliding.

17.5.10 Taxi

In loose or dry snow, a higher-than-normal altitude is recommended to prevent whiteout (zero visibility because of blowing snow).

17.6 HOT-WEATHER OPERATION

Operations when outside air temperatures are above standard day conditions do not require any special handling technique or procedures other than a closer monitoring of oil temperatures and TOT. As ambient temperature increases, engine efficiency decreases, and power can become critical under high gross-weight conditions on extremely hot days.

17.6.1 Desert Operation

Desert operation generally means operation in a very hot, dusty, and often windy atmosphere. Under such conditions, sand and dust will often be found in vital areas of the helicopter. Severe damage to the affected parts may be caused by sand and dust. The helicopter should be towed into takeoff position, which, if at all possible, should be on a hard, clear surface, free from sand and dust. Ensure the engine inlets are free of sand, heavy dust accumulation, and other foreign matter. Use normal starting procedures.

Note

During warm weather, oil temperature will probably be on the high side of the operating range.

Install engine inlet and exhaust covers after shutdown.

17.6.2 Preparation for Flight

Plan the flight thoroughly to compensate for existing conditions by using the charts in Part XI. Check for the presence of sand and dust in control hinges and actuating linkage. Inspect for and have removed any sand or dust deposits on instrument panel and switches and on or around flight and engine controls.

17.7 MOUNTAIN AND ROUGH TERRAIN FLYING

Many helicopter missions require flight and landings in rough and mountainous terrain. Refined flying techniques along with complete and precise knowledge of individual problems to be encountered are required. Landing site condition, wind direction and velocity, gross-weight limitations, and effects of obstacles are a few of the considerations for each landing or takeoff. In a great many cases, meteorological facilities and information are not available at the site of intended operation. The effects of mountains and vegetation can greatly vary wind conditions and temperatures. For this reason, each landing site must be evaluated at the time of intended operation. Altitude and temperature are major factors in determining helicopter power performance. Gross-weight limitations under specific conditions can be computed from the performance data. A major factor improving helicopter lifting performance is wind. Weight-carrying capability increases rapidly with increases in wind velocity relative to rotor system; however, accurate wind information is more difficult to obtain and more variable than other planning data. It is, therefore, not advisable to include wind in advance planning data except to note that any wind encountered in the operating area may serve to improve helicopter performance. In a few cases, operational necessity will require landing on a prepared surface at an altitude above the hovering capability of the helicopter. In these cases, a running landing and takeoff will be necessary to accomplish the mission. Data for these conditions can be computed from the charts in Part XI.

17.7.1 Wind Direction and Velocity

There are several methods of determining the wind direction and velocity in rough areas. The most reliable method is by the use of smoke generators; however, it must be noted that the hand-held day/night distress signal and the standard ordnance issue smoke hand grenade, although satisfactory for wind indication, constitute a fire hazard when used in areas covered with combustible vegetation. Observation of foliage will indicate to some degree the direction of the wind, but is of limited value in estimating wind velocity. Helicopter drift determined by eyesight without the use of navigational aids is the first method generally used by experienced pilots. The accuracy with which wind direction may be determined through the drift method becomes a function of wind velocity. The greater the wind value, the more closely the direction may be defined.

17.7.2 Landing Site Evaluation

Five major considerations in evaluating the landing area are: (1) height of obstacles that determine approach angle; (2) size and topography of the landing zone; (3) possible loss of wind effect; (4) power available; and (5) departure route. The transition period is the most difficult part of any approach. The period becomes more critical with increased density altitude and/or gross weight; therefore, approaches must be shallower and transition more gradual. As the height of the obstacles increases, larger landing areas will be required. As wind velocity increases, so does helicopter performance. When the helicopter drops below an obstacle, a loss of wind generally occurs as a result of the airflow being unable to negotiate immediately the change prevalent at the upwind side of the landing zone where a virtual null area exists. This null area extends toward the downwind side of the clearing and will become larger as the height of the obstacle and wind velocity increase; therefore, it is increasingly important in the landing phase that this null area be avoided if marginal performance capabilities are anticipated. The null area is of particular concern in making a takeoff from a confined area. Under heavy load or limited power conditions, it is desirable to have sufficient airspeed and translational lift prior to transitioning to a climb so that the overall climb performance of the helicopter will be improved. If the takeoff cycle is not commenced from the part of the area most downwind and translational velocity is not achieved prior to arrival in the null area, a significant loss in height may occur at the most critical portion of the takeoff. It must also be noted that in the region of the null area, a nearly vertical downdraft of air may be encountered, which will further reduce the actual climb rate of the helicopter. It is feasible that under certain combinations of limited area, high obstacles upwind, and limited power available, the best takeoff route would be either crosswind or downwind, terrain permitting. The effects of a detrimental windflow and the requirement to climb may thus be minimized or circumvented. Even though this is a departure from the cardinal rule of takeoff into the wind, it may well be the proper solution when all factors are weighted in their true perspective. Never plan an approach to a confined area where there is no reasonable route of departure. The terrain within a site is considered from an evaluation of vegetation, surface characteristics, and slope. Care must be taken to avoid placing the rotor in low brush or branches. Obstacles covered by grass may be located by flattening the grass with rotorwash prior to landing. Power should be maintained so that an immediate takeoff may be accomplished should the helicopter start tipping from soft earth or a skid being placed in a hidden hole.

WARNING

Extreme care must be taken to prevent the rotor blades from striking terrain or obstacles on either side of the helicopter.

17.7.3 Effects of High Altitude

Engine power available at altitude is less, and hovering ability can be limited. High gross weight at altitude increases the susceptibility of the helicopter to blade stall. Conditions that contribute to blade stall are high forward speed, high gross weight, high altitude, increased g loading, and turbulence. Shallower turns at slower airspeeds are required to avoid blade stall. A permissible maneuver at sea level must be tempered at a higher altitude. Smooth and timely control application and anticipation of power requirements will do more than anything else to improve altitude performance.

17.7.4 Turbulent Air Flight Techniques

Helicopter pilots must constantly be alert to evaluate and avoid areas of severe turbulence; however, if encountered, immediate steps must be taken to avoid continued flight through it to prevent the structural limits of the helicopter from being exceeded. Severe turbulence is often found in thunderstorms, and helicopter operations should not be conducted in their vicinity. The most frequently encountered type of turbulence is orographic, or mountain, turbulence. It can be dangerous if severe and is normally associated with updrafts and downdrafts. It is created by moving air being lifted by natural or manmade obstructions. It is most prevalent in mountainous regions and is always present in mountains if there is a surface wind. Orographic turbulence is directly proportional to the wind velocity. It is found on the upwind of slopes and ridges near the tops and extending down the downwind slope (Figure 17-1). It will always be found on the tops of ridges associated with updrafts on the upwind side and downdrafts on the downwind side. Its extent on the downwind slope depends on the strength of the wind and the steepness of the slope. If the wind is fairly strong (15 to 20 knots) and the slope is steep, the wind will have a tendency to blow off the slope

and not follow it down; however, there will still be some tendency to follow the slope. In this situation there will probably be severe turbulence several hundred yards downwind of the ridge at a level just below the top. Under certain atmospheric conditions, a cloud may be observed at this point. On more gentle slopes, the turbulence will follow down the slope, but will be more severe near the top. Orographic turbulence will be affected by other factors. The intensity will not be as great when climbing a smooth surface as when climbing a rough surface. It will not follow sharp contours. Manmade obstructions and vegetation will also cause turbulence. Extreme care should be taken when hovering near buildings, hangars, and similar obstructions. The best method to overfly ridgelines from any direction is to gain sufficient altitude prior to crossing to avoid lee-side downdrafts. If landing on ridgelines (Figure 17-2), the approach should be made along the ridge in the updraft or select an approach angle into the wind that is above the lee-side turbulence. When the wind blows across a narrow canyon or gorge (Figure 17-3), it will often veer down into the canyon. Turbulence will be found near the middle and downwind side of the canyon or gorge. When a helicopter is being operated at or near its service ceiling and a downdraft of more than 96 feet per minute is encountered, the helicopter will descend. Although the downdraft does not continue to the ground, a severe rate of descent may be established and the helicopter will continue descending and crash even though the helicopter is no longer affected by the downdraft; therefore, fly close aboard that side of the pass or canyon that affords an upslope wind. This procedure not only provides additional lift, but also provides a readily available means of exit in case of emergency. Maximum turning space is available and a turn into the wind is also a turn to lower terrain. The often-used procedure of flying through the middle of a pass to avoid mountains invites disaster. This is frequently the area of greatest turbulence (Figure 17-4) and, in case of emergency, the pilot has little or no opportunity to turn back because of insufficient turning space.

Rising air currents created by surface heating cause convective turbulence, most prevalent over bare areas. Convective turbulence is normally found at a relatively low height above the terrain, generally below 2,000 feet; however, it may reach as high as 8,000 feet above the terrain. An attempt to fly over convective turbulence should be carefully considered, depending on the mission assigned. The best method is to fly at the lowest altitude consistent with safety. Attempt to keep your flightpath over areas covered with vegetation. Turbulence can be anticipated when transitioning from bare areas to areas covered by vegetation or snow. Convective turbulence seldom is severe enough to cause structural damage.

Note

Recommended turbulence penetration airspeed is 80 KIAS, when encountering moderate turbulence, to reduce airframe stress and provide for easier aircraft control.

17.7.5 Adverse Weather Conditions

When flying in and around mountainous terrain under adverse weather conditions, it should be remembered that the possibility of inadvertent entry into clouds is ever present.

Air currents are unpredictable and may cause cloud formations to shift rapidly. Because depth perception is poor with relation to distance from cloud formation and to cloud movement, low-hanging clouds and scud should be given a wide berth at all times. In addition to a thorough brief, the pilot should study carefully the route to be flown. A careful check of the helicopter compass should be maintained in order to fly a proper heading if the occasion demands.

17.7.6 Summary

The following guidelines are considered to be most important for mountain and rough terrain flying:

1. Make a continuous check of wind direction and estimated velocity.
2. Plan your approach so that an abort can be made downhill and/or into the wind without climbing (Figure 17-5).
3. If the wind is relatively calm, try to select a hill or knoll for landing so as to take full advantage of any possible wind effect.
4. When evaluating a landing site, execute as many fly-bys as necessary with at least one high and one low pass before conducting operations into a strange landing area.
5. Evaluate the obstacles in the landing site and consider possible null areas and routes of departure.

6. Landing site selection should not be based solely on convenience, but consideration should be given to all relevant factors.
7. Determine ability to hover out of ground effect prior to attempting a landing.
8. Watch for rpm surges during turbulent conditions. Strong updrafts will cause rpm to increase, whereas downdrafts will cause rpm to decrease.
9. Avoid flight in or near thunderstorms.
10. Avoid IMC conditions.
11. Fly as smoothly as possible and avoid steep turns.
12. Cross mountain peaks and ridges high enough to stay out of downdrafts on the lee side of the crest.
13. Avoid downdrafts prevalent on leeward slopes.
14. Plan your flight to take advantage of the updrafts on the windward slopes.
15. Whenever possible, approaches to ridges should be parallel to the ridge rather than perpendicular to it.
16. Avoid high rates of descent when approaching landing sites.
17. Know your route and brief thoroughly for flying in these areas.
18. When approaching power and telephone lines, a good practice to follow is to fly over the poles or towers rather than the lines.

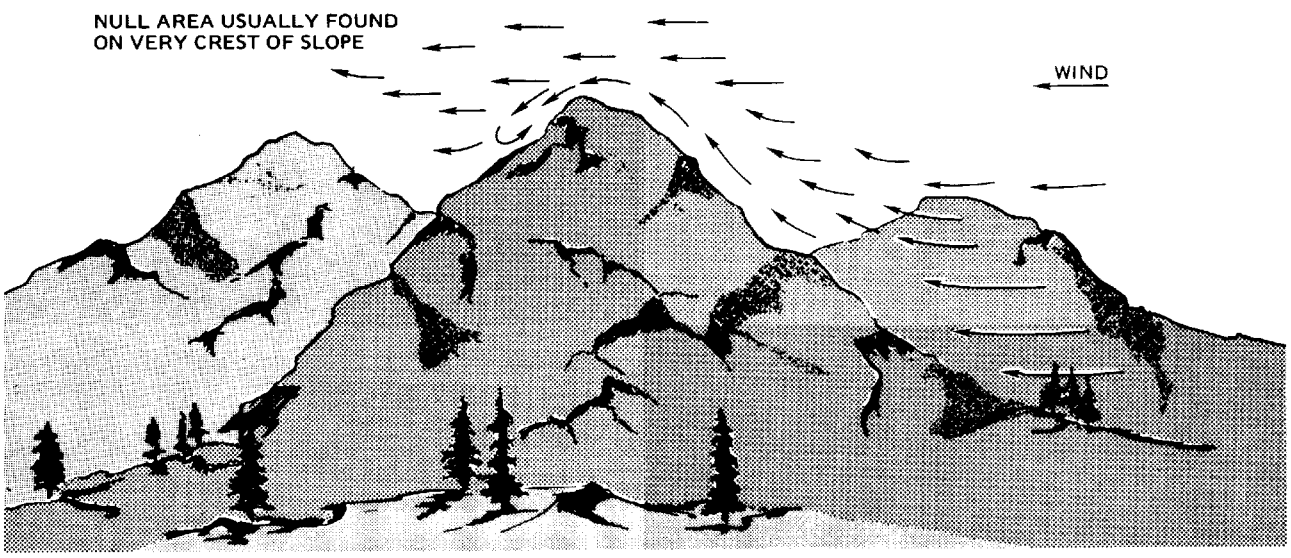

UPDRAFTS WILL EXTEND ABOVE THE SURFACE FURTHER THAN THE TURBULENCE DEPENDING ON WIND SPEED

IN VERY STRONG WIND CONDITIONS AND/OR VERY STEEP SLOPES, THE TURBULENCE WILL BE FOUND FORWARD OF THE SLOPE IN CLEAR AIR

206900-119-2

Figure 17-1. Wind Flow Over and Around Peaks

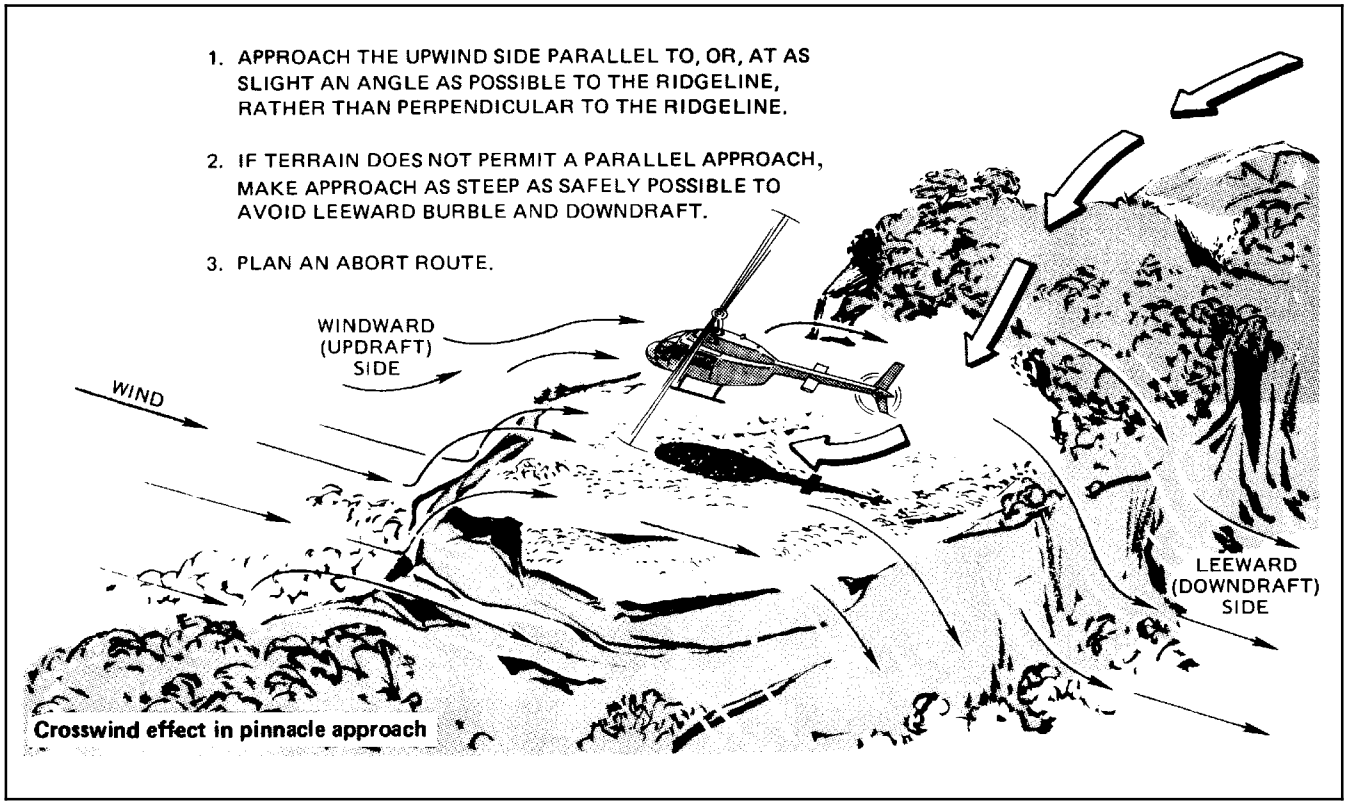

Figure 17-2. Approach to Ridgeline

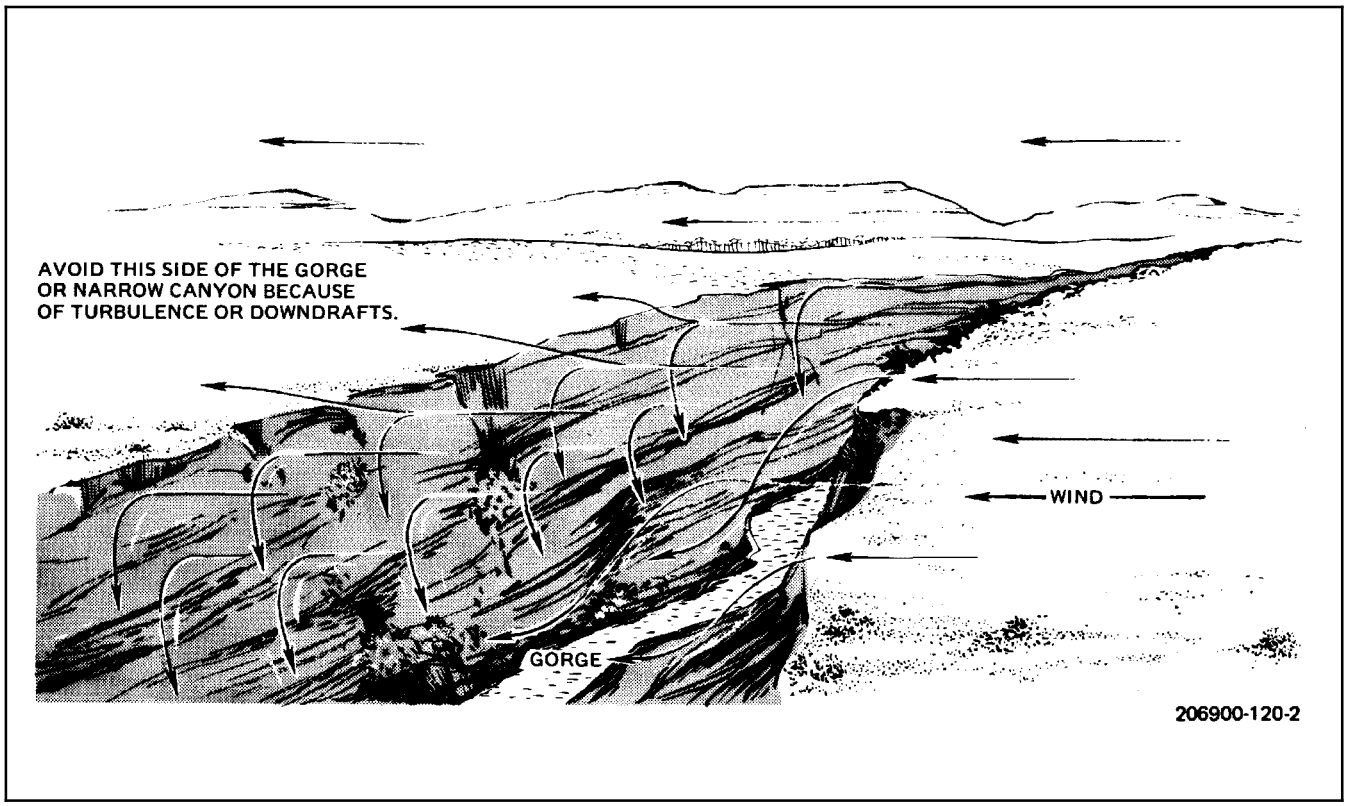

Figure 17-3. Wind Effects Over Gorge or Canyons

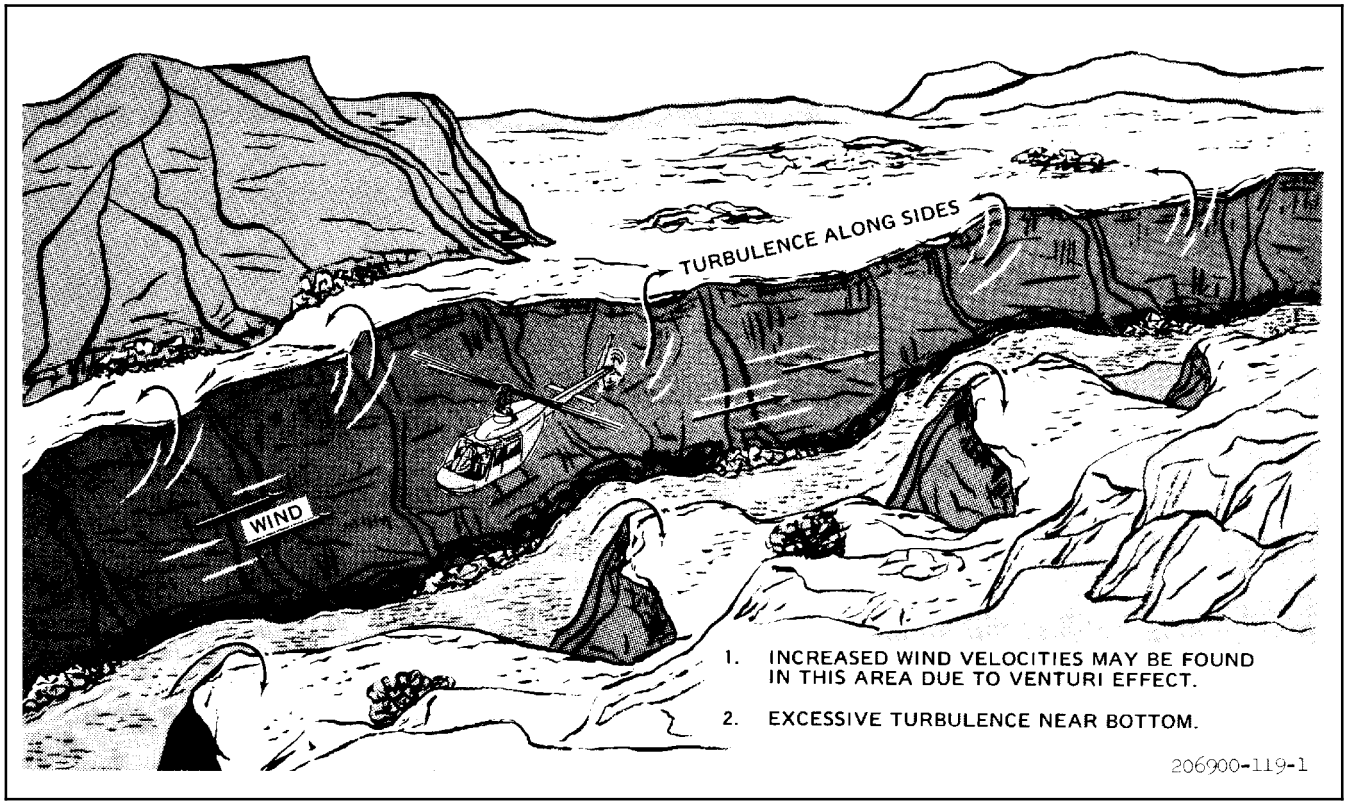

Figure 17-4. Wind Effects in Valleys or Canyons

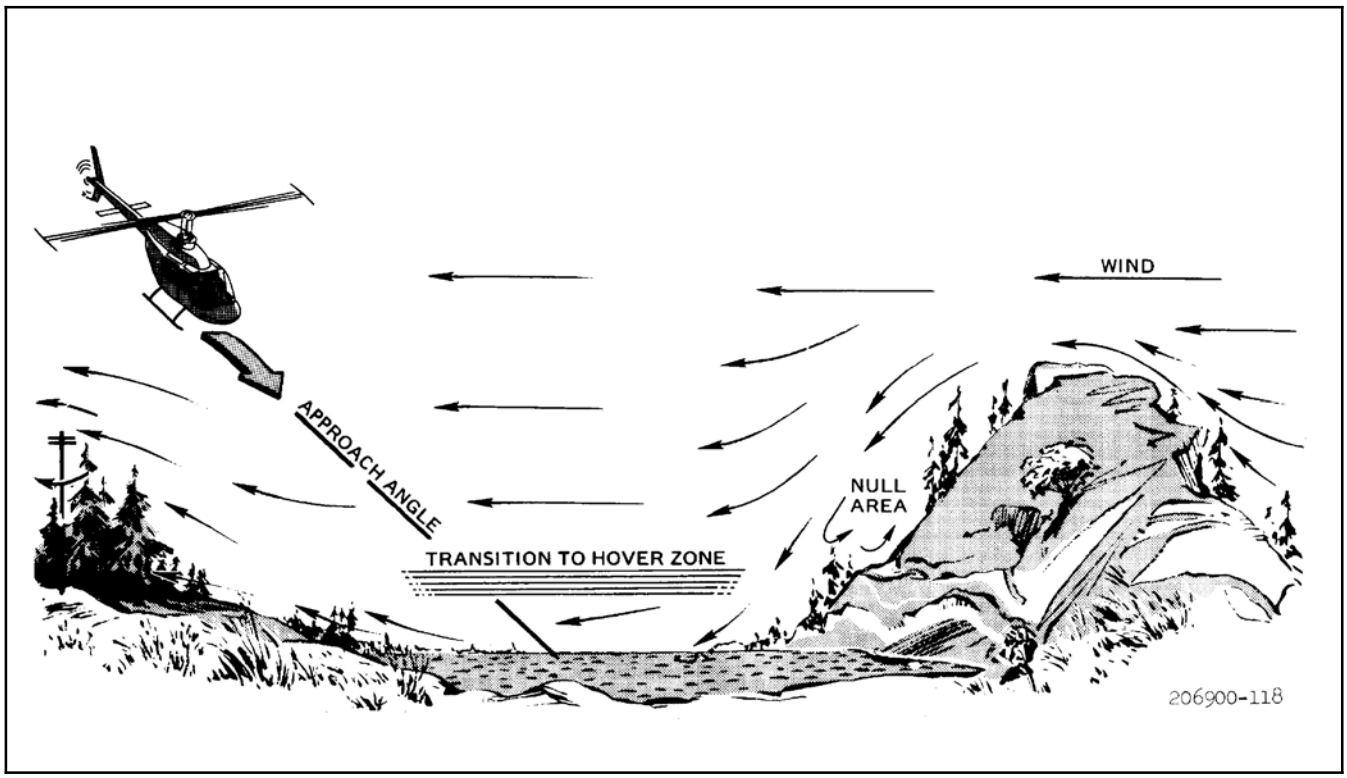

Figure 17-5. Wind Effect in a Confined Area

PART VII

Communications/Navigation Equipment and Procedures

Chapter 18 — Communications/Navigation Equipment and Procedures

CHAPTER 18

Communications/Navigation Equipment and Procedures

18.1 INTRODUCTION

The role of communications is to provide an effective means of control and coordination. It is of primary importance that all transmissions be as brief and accurate as possible. To accomplish this without overloading the tactical circuits requires strict adherence to proper voice procedures and radio discipline. Communications procedures and terminology are standardized by NWPs 16, 32, 37, and 41 series.

18.2 IMPORTANCE OF PROPER PROCEDURES

Proper communications and communication procedures are vital to the safe, efficient operation of aircraft and, more often, are essential to the successful completion of any operation involving more than one aircraft. A continuous guard of the emergency frequency must be maintained at all times, but transmission of the guard frequency will be made only in an emergency situation. Radio transmission should be preceded by the call sign of the flights as well as the individual call sign (e.g., “Navy 1E – –, Factory Hand – –, etc.”).

When identification requires the use of the bureau number, the last five digits shall be used. Channelization of the UHF shall be in accordance with the appropriate directives and a complete frequency channelization card should be placed in each helicopter.

18.3 COMMUNICATIONS AND ASSOCIATED ELECTRONIC EQUIPMENT

18.3.1 Controls

Operating control panel units are located on the console within reach of pilot and copilot.

On the TH-57C, AVIONICS MASTER switches (two) are located on the overhead circuit breaker panel (Figure 2-10) and pedestal circuit breaker panel (Figure 2-13) to allow instantaneous control of electrical power to the following avionic equipment:

AVIONICS MASTER (UPPER)	
VHF COMM radio	Left RMI
Left normal ICS	Marker beacon
Right emergency ICS	Avionics inverter
NAV 1 receiver	Encoding altimeter
HSI	Radar altimeter
DME	
AVIONICS MASTER (LOWER)	
UHF COMM radio	ADF receiver
Right normal ICS	Right RMI
Left emergency ICS	Transponder
GPS	

18.3.2 Antennas

The UH10-76 UHF antenna is located below the center left pilot seat. See Figure 18-1 for antenna locations. KA-23 marker-beacon and KA-60 transponder antennas are located under the nose of the helicopter. The KA-44B ADF antenna is on the underside of the fuselage centered below the crew seats. The KA-60 DME/TACAN antenna is located below the pilot seat. The KA-54 radar altimeter antennas (two) are located on the rear underside of the fuselage. The KMT112 flux valve is located inside the tailboom immediately aft of the attaching points. The DM N4-4 NAV antenna system, consisting of two semicircular antennas, is located on each side of the fuselage just forward of the tailboom attaching points. The DMC70-1A VHF antenna is located on the bottom of the tail pylon directly aft of the pylon attaching point. The KA 92 GPS antenna is located on the top center of the forward fairing.

18.4 TH-57C COMMUNICATIONS AUDIO SYSTEM

The audio system incorporates two control panels (KMA-24H-65). The two controls provide the pilot and copilot control of the audio functions of both communications systems, the navigation systems, DME, marker beacon, and the ADF (Figure 18-2). One audio control is directly in front of each pilot; thus, all audio inputs, except ICS, are individually selectable. An emergency mode is provided so that the pilot retains headset audio in the event of a malfunction. All audio inputs are provided to both control panels except the individually supplied RAD ALT DH, low rotor rpm, and engine-out tones, which are supplied by an audio generator. The ICS is provided utilizing the two audio control panels for pilot use and two isolation amplifiers (KA-65) to provide inputs for two rear seat positions.

18.4.1 Intercom Control (C)

The KMA-24H has a built-in intercom with its own amplifier. There are four intercom inputs: one each for the pilot, the copilot, and two inputs for communication from the back seat. The INT VOL knob on the left of each audio control panel controls the volume of intercom audio without affecting the volume of the audio inputs selected with the pushbuttons. Turning the knob all the way counterclockwise cuts off the intercom inputs and any background noise from the intercom system.

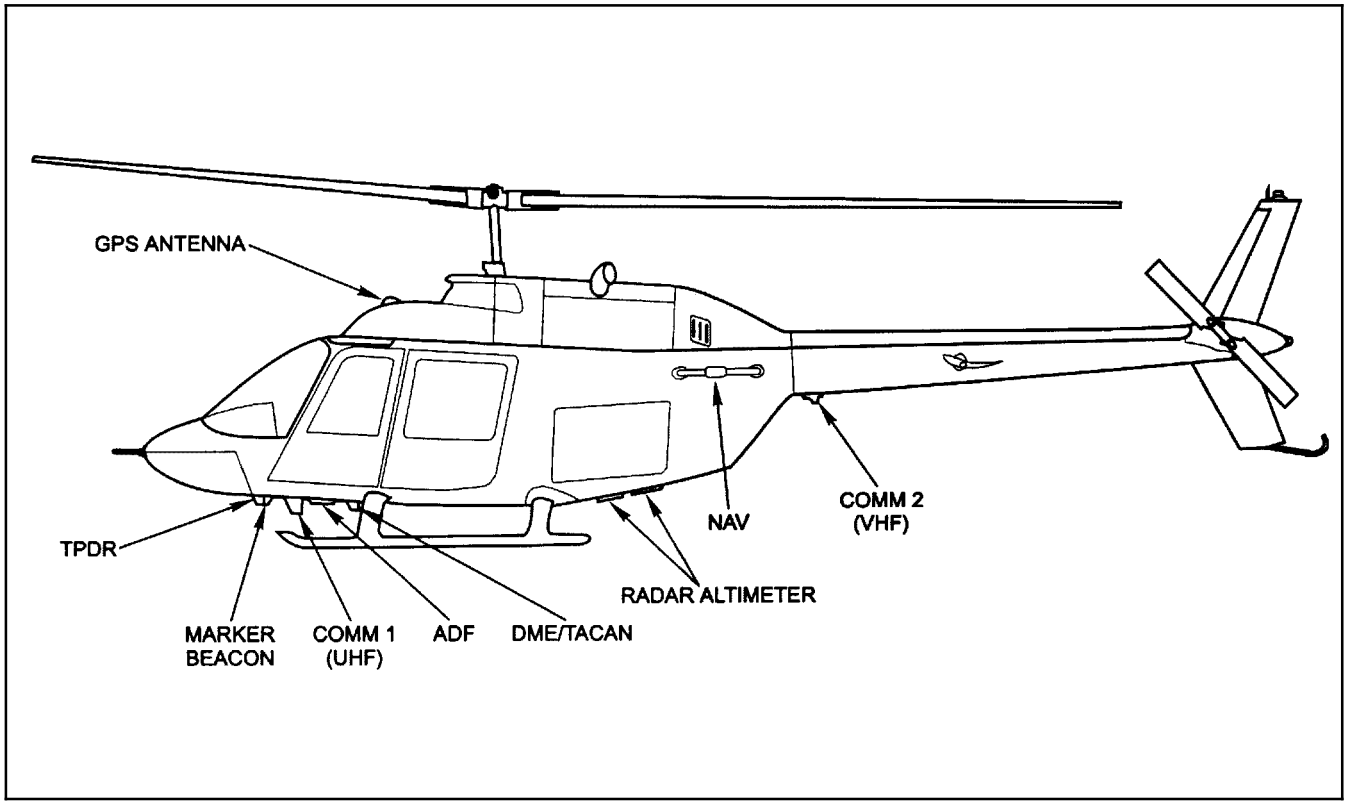

Figure 18-1. Antenna Locations

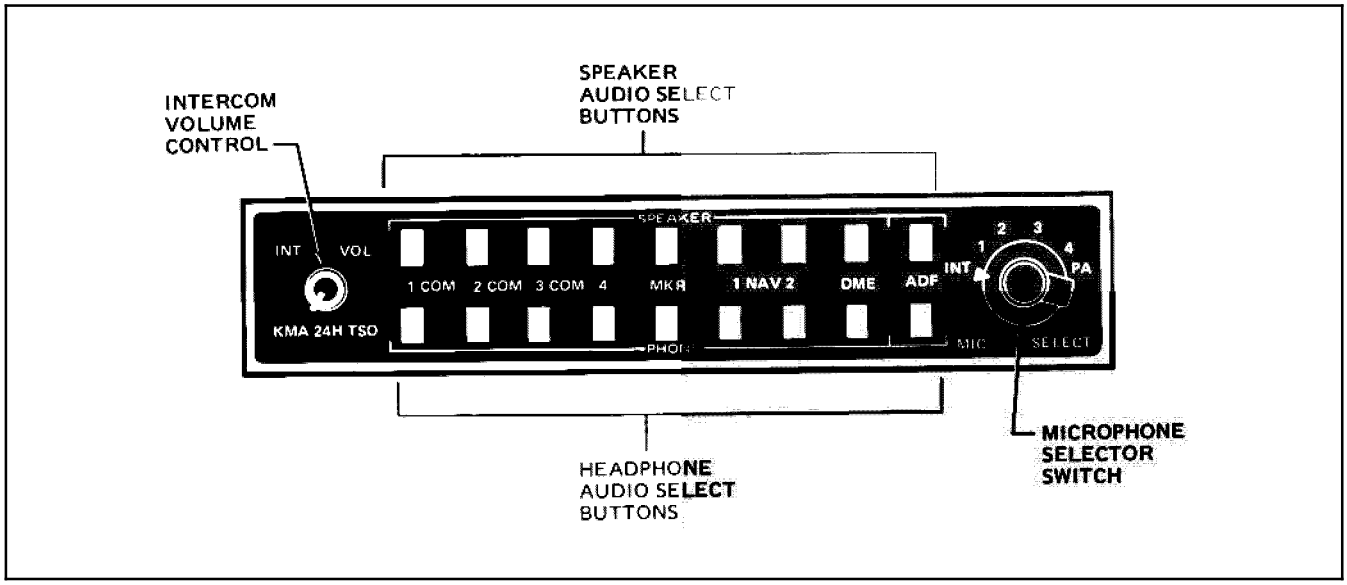

Figure 18-2. Audio Control Panel (KMA-24H)

When either pilot or copilot keys the microphone to transmit, all other microphone inputs are muted to ensure the keyed microphone is the single source of transmitted audio. All receiver inputs are also muted during transmit.

If the pilot and copilot key their mikes at the same time, the pilot mike will override the copilot mike. Keying the mikes can be accomplished using either the pilot or copilot footswitch or the trigger switch on either the pilot or copilot stick grip. The footswitches permit ICS transmitting only, whereas the trigger switches permit ICS transmitting at the first detent and external transmitting at the second detent.

18.4.2 Receiver Audio Control Panels (C)

Receiver selection is accomplished by using pushbuttons on the face of each audio control panel. The audio control panels allow the pilot and copilot to select the COM or NAV radios independently for monitoring through their respective headphones. Normal selection of radios is accomplished by the bottom row of buttons on each control panel and having the NORM/EMERG switch in NORM position. The top row of buttons is used upon loss of audio by switching the NORM/EMERG switch to EMERG and reselecting the desired radio to be monitored. Additionally, rear-seat receiver selection is accomplished through the top row copilot audio control panel, both in “NORM” and “EMERG” operating modes.

18.5 TH-57C COMMUNICATION SYSTEM

Two individual modes of radio communication are utilized: a UHF AM (Amplitude Modulation) transceiver (AN/ARC-159 (V1)) system is provided as COM 1 and a VHF AM transceiver (KY-196) is provided as COM 2. To select the UHF, the pilot or copilot must push COM 1 button in to receive only or turn the MIC select control knob to COM 1 to transmit and receive. In the latter case, UHF reception will be muted if the COM 1 button on the audio panel is left in the out position. To select VHF, utilize the same procedure as for UHF. Both units are located in the radio console and both are selectable by either operator. One pilot may operate one system while the other pilot may operate the remaining system. For example, the pilot can transmit-receive UHF (COM 1) and monitor VHF (COM 2) while the copilot transmits and receives on COM 2 (VHF) while monitoring COM 1, independently of each other.

18.5.1 Controls and Functions

INT VOL knob — Rotate clockwise to turn power on to the unit and increase volume.

PHONE or SPEAKER audio buttons — Press desired buttons to monitor desired receivers: Top row buttons on copilot panel pressed as desired for rear station occupants.

COM 1 — UHF.

COM 2 — VHF.

COM 3/4 — Not installed.

NAV 1/NAV 2 — Selects associated VOR audio and CW signals.

DME — Selects VOR or TACAN CW signal (in conjunction with selected NAV radio).

ADF — Selects AUDIO and/or CW signal from tuned ADF station.

MIC SELECT knob — Select desired transceiver to transmit.

18.5.2 Operation

1. INT VOL knob — ON.
2. PHONE or SPEAKER audio buttons — As desired.
3. MIC SELECT knob — As desired.

18.5.3 TH-57B Communications and Audio System

Three COMM CONT panels are installed in the helicopter: one each for the pilot and copilot, mounted on the lower part of the console, and a third for passengers/observers, mounted on the back of the control column. These panels are used as a control unit for the intercommunications and radio system.

18.5.3.1 Controls and Functions

18.5.3.1.1 ON/OFF Switches 1, 2, 3, 4, and 5

The ON position applies the output of the connected radio receiver to the earphones. The OFF position disconnects the receiver from the earphones. Switches 3, 4, and 5 are not used. Switch 1 is connected to the UHF receiver. Switch 2 is connected to the VHF receiver. The NAV switch is connected to the NAV part of the VHF receiver. The AUX switch is not used.

18.5.3.1.2 Transmit — Interphone Selector

The transmit-interphone selector is a six-position rotary switch. The ICS position permits communication between the pilot and passengers. Position 1 permits transmission on the UHF radio. Position 2 permits transmission on the VHF radio. Positions 3, 4, and 5 are not used.

18.5.3.1.3 HOT MIKE Switch

The HOT MIKE switch in the HOT MIKE position permits communication without pressing the cyclic or floor switch.

18.5.3.1.4 VOL Switch

The VOL switch controls the volume in the headset.

18.6 VHF RADIO KY-196 (C)

VHF radio KY-196 operating range is line of sight or 50 miles. The VHF radio (Figure 18-3) is a 720-channel communication radio that operates between 118.0 and 135.95 MHz in 25-kHz increments. The KY-196 has dual memory mode of USE and STANDBY. One frequency can be held in STANDBY mode while operating on another. The two frequencies can be interchanged by pressing the transfer button.

Both frequencies are displayed at all times on the radio display and are stored through aircraft shutdowns and power interruption without draining power from the battery.

When the transmitter is operating, a lighted transmit indicator “T” provides a visual verification on the control head.

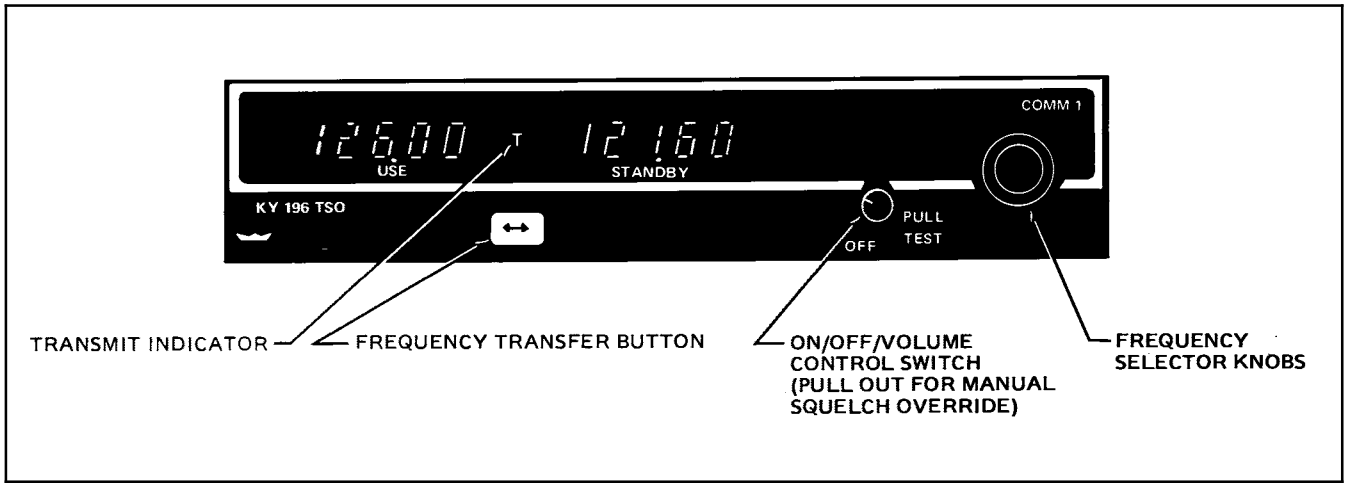

Figure 18-3. VHF (KY-196)

18.6.1 Operation

1. On/OFF volume knob — Rotate on, adjust volume, pull and rotate to adjust squelch if desired.
2. Frequency — Apply to STANDBY. Rotate selector knobs to select frequency.

Note

The outer knob is used to change the MHz portion of the frequency display and the inner knob is used to change the kHz portion. This smaller knob changes frequencies in steps of 25 kHz when pushed in; when knob is pulled out, it changes preset frequencies.

3. Transfer button — Press.
4. Frequency — Repeat step 2. for tuning. Frequency displayed in the USE position is operational.

18.7 VHF RADIO (KX155) (B)

The VHF radio (Figure 18-4) is a communication/navigation radio. Both COMM and NAV radios are line of sight with a range of approximately 25 miles. The COMM radio operates between 118.00 to 135.00 MHz. The NAV radio operates between 108.00 to 117.95 MHz. Both COMM and NAV radios have memories that store the last frequencies used in the USE and STANDBY positions. In the event of a memory failure when power is removed from the set, the display will show 120.00 MHz the next time power is applied.

18.7.1 COMM Radio Operation

1. Power switch — Rotate on, adjust volume, pull and rotate to adjust squelch if desired.
2. Frequency — Tune.
3. USE-STANDBY selector — Press.
4. Frequency — Tune. The frequency displayed in the USE position is on standby for transmission or reception.

18.7.2 NAV Radio Operation

1. Volume — Adjust, pull to ident.
2. Frequency — Tune.
3. USE-STANDBY selector — Press.
4. Frequency — Tune. The frequency displayed in the USE position will receive a signal and will be displayed on the CDI.

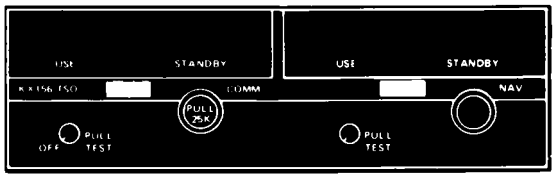

Figure 18-4. VHF Radio (KX155)

18.8 UHF RADIO (AN/ARC-159 (V1)) (B)

The AN/ARC-159 (V1) UHF Radio is installed in the TH-57B aircraft for UHF communications. The UHF radio (Figure 18-5) provides two-way voice communication between the helicopter and other stations equipped with compatible equipment. The frequency range is from 225.000 to 399.950 MHz and is tuned in on 0.05 increments of any one of the 3,500 available channels. The radio control panel permits selection of any of 20 preset channels, manual tuning capability, and guard channel transmit capability. Transceiver range is line of sight.

18.8.1 Controls and Functions

VOL — Adjusts audio output level.

SQL/OFF — Enables or disables main receiver squelch. Squelch is disabled in OFF position.

READ — A toggle switch spring loaded to OFF. Pushing switch to READ causes frequency of selected preset channel to be displayed on readout for approximately 10 seconds.

BRT/TEST — Adjusts light intensity of readout. Rotating full clockwise activates TEST for readout lamps. In TEST, all readout windows display the number 8.

Frequency selectors — Toggle switches mounted four abreast across the center of the control head. The toggle switches are spring loaded to the center position. Pushing a toggle switch forward increases the respective frequency increment(s). Pushing a toggle switch aft decreases the respective frequency increment(s). The individual selectors select the frequency increment(s) desired for manual operation and the frequency increment(s) desired for setting the 20 preset channels. Starting with the left toggle switch and moving right laterally, the individual switches control the following frequency increments:

1. Selects and indicates 100- and 10-MHz frequency increments.
2. Selects and indicates 1-MHz frequency increment.
3. Selects and indicates 0.1-MHz frequency increment.
4. Selects and indicates 50- and 25-kHz frequency increments.

TONE — Keys transmitter and modulates transmitted signal with 1020 Hz tone.

CHAN SEL — Preset channel selector. Sets channel when mode selector is in PRESET.

LOAD — Inserts selected frequency into channel memory when mode selector is in PRESET.

01 to 20 — Provides semipermanent record of preset frequencies.

GUARD — Tunes receiver-transmitter to guard frequency. Displays guard frequency on readout.

MANUAL — Permits manual selection of frequency. Selected frequency is displayed on readout.

PRESET — Permits selection of any of 20 preset channels. Displays selected channel number on readout in third and/or fourth digit position. Remaining four digits are blank.

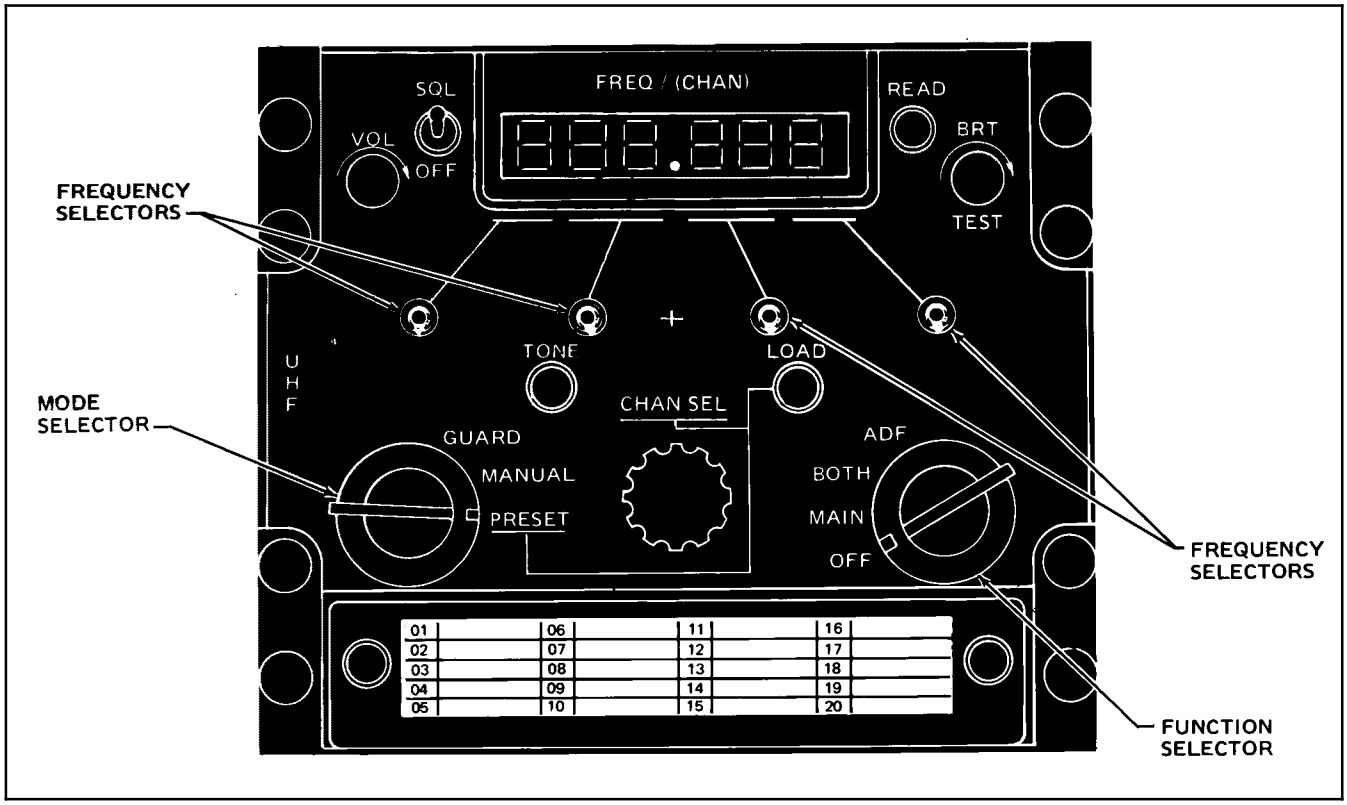

Figure 18-5. UHF Radio (AN/ARC-159 (V1))

18.8.2 Function Selector

OFF — Turns off power to receiver-transmitter.

MAIN — Selects normal receive and transmit operation. Transmitter is keyed by microphone push-to-talk switch or TONE button.

BOTH — Enables guard receiver in addition to functions described for MAIN.

ADF — Feature not incorporated in this installation.

18.8.3 Setting Preset Channels

1. ADF/BOTH/MAIN/OFF — MAIN.
2. GUARD/MANUAL/PRESET — PRESET.
3. CHAN SEL — Select channel.
4. READ — Position to READ and check frequency.
5. Frequency selectors — Select desired frequency.
6. LOAD — Press.
7. Repeat steps 3. through 6. for each channel as desired.

18.8.4 UHF Radio Operation

1. Audio control panel PHONE 1 COM — Push.
2. Audio control panel MIC SELECT — Position 1.
3. ADF/BOTH/MAIN/OFF — As required.
4. SQL/OFF — SQL.
5. GUARD/MANUAL/PRESET — As required.
6. BRT/TEST — As required.
7. CHAN SEL — As required.
8. TONE — Press.
9. VOL — Adjust.
10. TONE — Release.

18.9 KTR-909 UHF RADIO (C)

The KTR-909 UHF radio is installed in the TH-57C aircraft for UHF communications. The KTR-909 UHF transceiver (Figure 18-6) provides two-way AM voice communications from 225.000 to 399.975 MHz. The KTR-909 provides 20 user-programmable channels for quick access with guard between preset 20 and preset 1. The manual mode may be selected by depressing the channel mode select button. Guard may be selected or deselected by pressing the receiver mode select button. When switching between manual and preset modes, guard monitoring must be reselected.

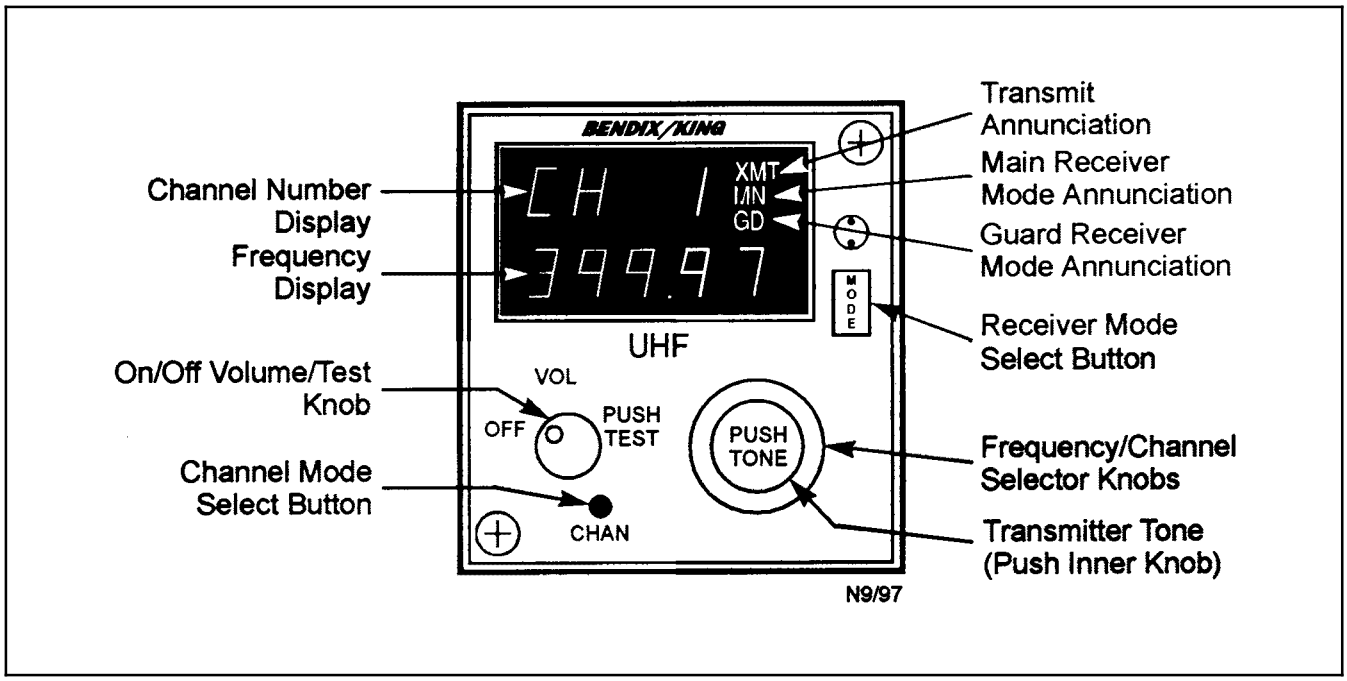

Figure 18-6. KTR-909 UHF Transceiver

18.10 TRANSPONDER (KT-79A) AND ALTITUDE ENCODER (KE-127)

The transponder and altitude encoder system consists of a KT-79A transponder and a KE-127 altitude encoder.

The transponder (Figure 18-7) is a radio transmitter and receiver that is part of the radar beacon equipment designed to fulfill the role of airborne beacon requirements of the air traffic control radar beacon system. It receives ground radar signals at 1030 MHz and these trigger a coded response of radar pulses at 1090 MHz, which is transmitted back to the ground radar. In normal operation, the transponder provides digital coded information that will reply in 4,096 preselected codes.

The KE-127 altitude encoder in the transponder system provides altitude identification of the transponder in 100-foot increments from –1,000 to +63,000 feet.

The transponder is equipped with a reply light that indicates normal functions and replies to interrogations from ground radar. Interrogations occur at 10- to 15-second intervals with each sweep of the search radar.

18.10.1 Controls and Functions

Function selector switch:

OFF — Removes power from set.

SBY — Applies power for warmup (47 seconds nominal).

ON — Transmits selected code (MODE A).

ALT — Transmits selected code (MODES A and C) (TH-57C only).

TST — Illuminates test light to show set is operational (displays all 8s).

EMR — Press; Transmits CODE 7700 until retuned.

IDT — Press; Transmits predetermined code to ground controller.

Control knobs (four) — Change code displayed.

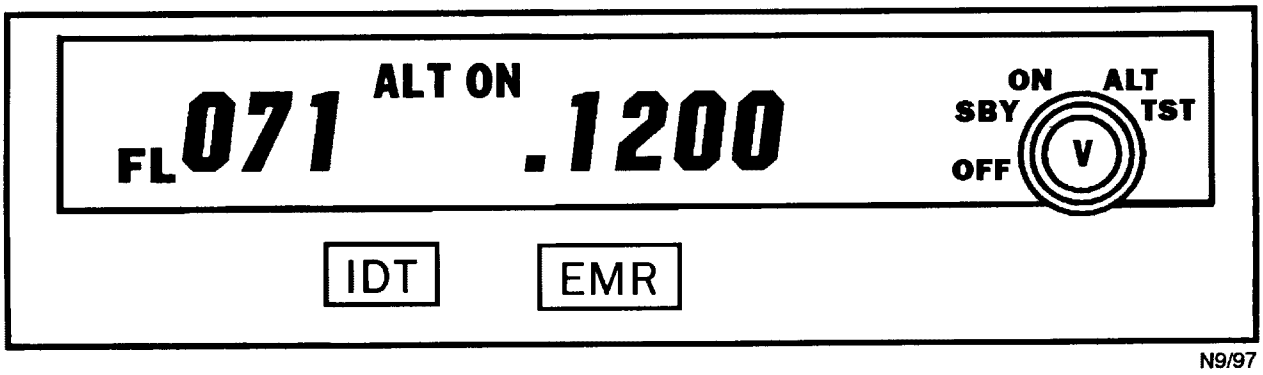

Figure 18-7. Aircraft Transponder (KT-79A)

18.10.2 Operation

1. Function selector switch — SBY.
2. Control knobs — As required.
3. Function selector (TST) — Check light illuminates.
4. Function selector — ON or ALT as required.

18.11 MARKER BEACON (KR-21 AND KA-40) (C)

The marker beacon system consists of a KR-21 beacon receiver (Figure 18-8), a two KA-40 light adapter, and a KA-23 antenna. The marker beacon system receives power when the essential No. 2 bus is energized.

The KR-21 receiver provides an audio signal and a visual indication when the aircraft passes over a marker beacon located on an ILS or localizer approach course. Signals received by the KR-21 are sent to the KMA-24H audio control panel, producing audio indications, while lights display the information on the face of the KR-21 marker beacon receiver and the KA-40 marker beacon adapter on the instrument panel (Figure 2-3). The lights on the KR-21 and KA-40 may be tested by placing the sensitivity switch in the T, or test, position.

18.11.1 Operation

1. Ensure electrical power is supplied to marker beacon by battery, generator, or auxiliary power unit.
2. Sensitivity switch — High (H), Low (L), or Test (T), as desired.

18.12 DME/TACAN SYSTEM (KTU-709) (C)

The DME/TACAN system consists of a KTU-709 DME/TACAN transceiver, KDI-573 slaved indicator, and KNS-81 receiver. The system operates on a line-of-sight basis. The DME operates on 252 channels (126 X and 126 Y), 1025 to 1150 MHz (transmit) and 962 to 1213 MHz (receive), which are selected through the KNS-81 receiver. When a TACAN is selected through the KNS-81 receiver, TACAN bearing information is active on the double needle of both RMIs.

The KDI-573 indicators (Figure 18-9) display TACAN distance, groundspeed, and time to station when the pilot or copilot selects NAV 1. When the RAD button is depressed, radials from waypoints, VOR, or VORTAC stations are displayed in place of groundspeed. Range is displayed to the nearest 0.1 nm from 0 to 99.9 and to the nearest nm from 100 to 389. Groundspeed is displayed to the nearest knot from 0 to 999.

18.12.1 DME Operation

1. KNS-81 — Turn on and select station to be used as channeling source.
2. Pilot/copilot — Select NAV 1 as desired.

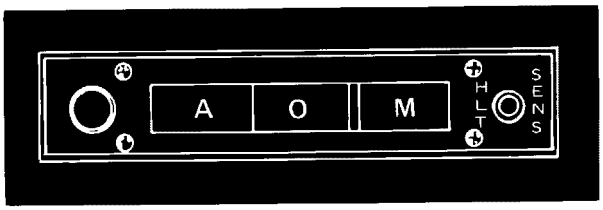

206071-18

Figure 18-8. Marker Beacon (KR-21)

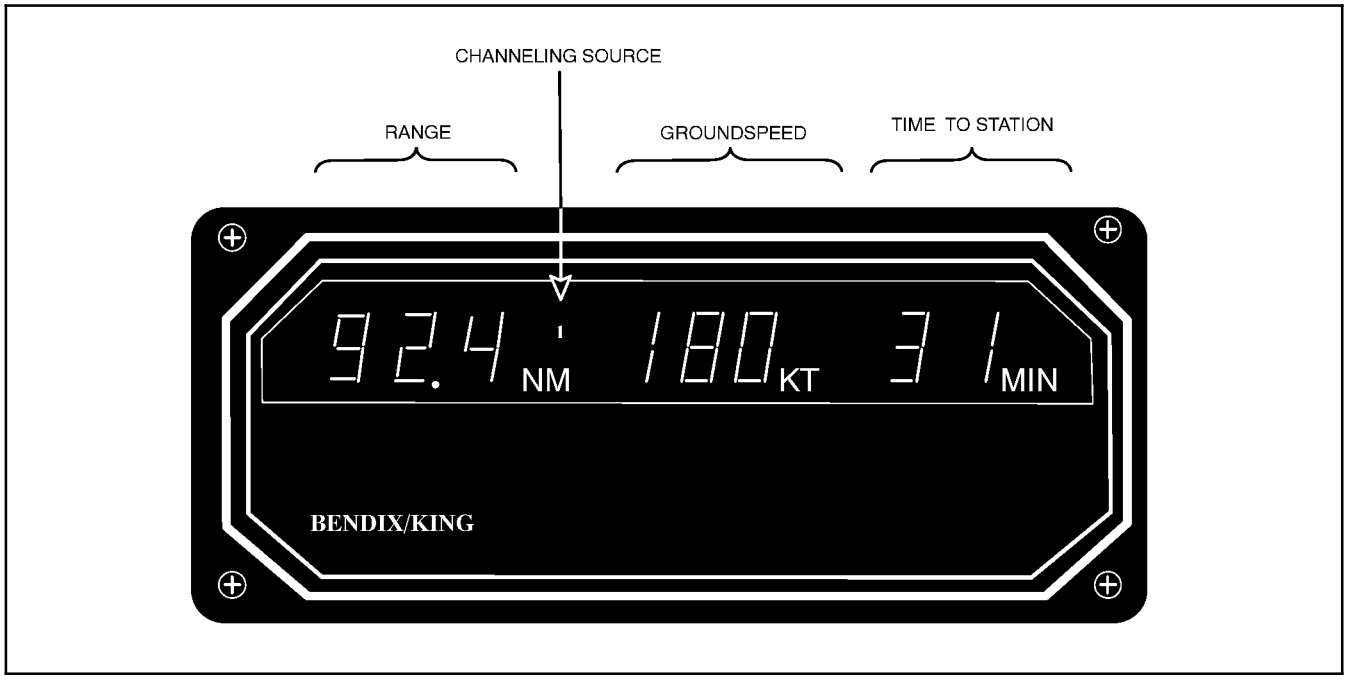

Figure 18-9. DME KDI-573

18.12.2 TACAN Operation

1. KNS-81 mode selector knob — Rotate to select TACAN mode.
2. KNS-81 data input control — Rotate to select TACAN station. Pull and rotate center knob to select X or Y stations.
3. Pilot/copilot — Select NAV 1 as desired.
4. Select DME on audio panel for identification.
5. KNS-81 RAD button — Press as desired to display TACAN bearing information instead of groundspeed in DME master and slaved indicator.
6. Repeat steps 1. through 5. for NAV 2 operation.

18.13 ADF (KR-87) (C)

The ADF navigation system consists of a KR-87 automatic direction finder (ADF receiver) (Figure 18-10) and two KNI-582 Radio Magnetic Indicators (RMIs). The system operating range is 150 to 200 miles average, depending on terrain and atmospheric electrical phenomena. The ADF receiver provides bearing information and audio information in the 200 Hz to 1799 kHz frequency band. This receiver enables the pilot to identify stations and listen to transcribed weather broadcasts or commercial radio stations in the AM broadcast band.

The unit has two display windows: active (left) and standby (right). The right window will display the standby frequency or act as a flight timer or programmable elapsed timer. The flight timer will keep track of the total flight time, whereas the elapsed timer can be reset to count up from zero or from present value count down to zero.

The RMI automatically displays VOR and ADF magnetic bearings and the magnetic heading of the helicopter. Two pushbuttons at the bottom corners provide selection of either VOR or ADF as a source of information on both or either needles.

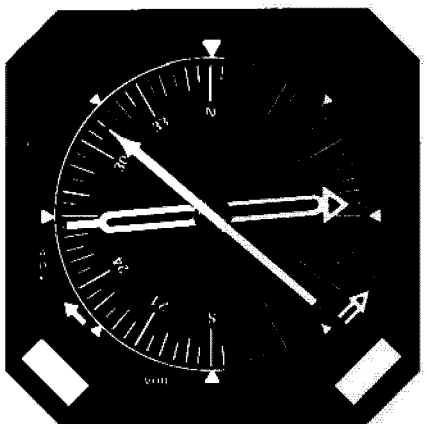

KNI 582 RMI (REF)

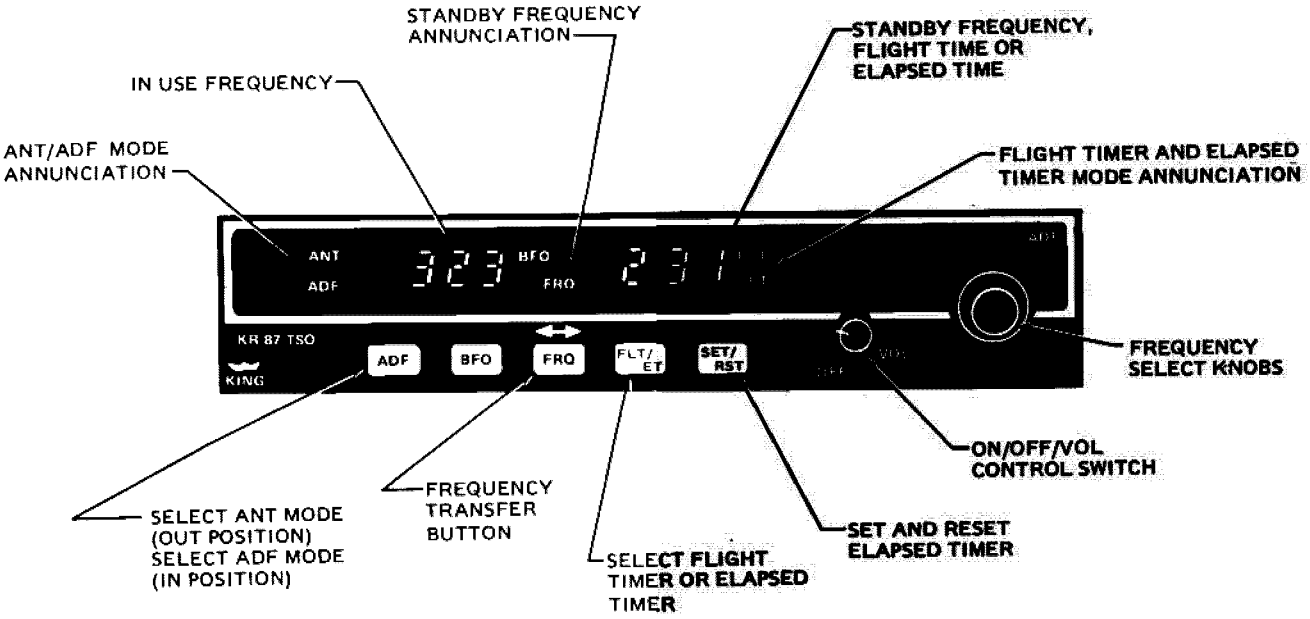

KR 87 ADF

Figure 18-10. ADF Receiver (KR-87)

18.13.1 Controls and Functions

ON/OFF/VOL switch — Activates ADF receiver when rotated clockwise from OFF detent. Increases audio level as rotated clockwise.

Frequency select knob — Selects frequency to which ADF is tuned (left window) when FLT and ET modes are shown steady on display. Selects standby frequency when FREQ mode is shown. Tunes 1s when small inner knob is pulled and rotated clockwise or counterclockwise. Tunes 10s when inner knob is pushed in and rotated. Tunes 100s and 1,000s when outer knob is rotated.

Frequency select knob — Selects time for elapsed timer when ET is flashing on display. Selects 10s of seconds when small inner knob is pushed in. Selects 1s of seconds when outer knob is pulled out. Outer knob selects minutes.

SET/RST button — Resets the elapsed timer when pressed momentarily and released. Changes elapsed timer from countup mode to countdown mode when pressed and held for approximately 2 seconds. ET will flash on display and allow countdown time to be set. Starts countdown when pressed momentarily and released. Once countdown has started, countdown time may be reset after pressing for approximately 2 seconds.

FLT/ET button — Flight time will be displayed in the right side window in place of the standby frequency when power is first applied. “FLT” will be annunciated. Flight time may then be checked at any time during a flight, regardless of what is currently displayed, by pressing FLT/ET button.

FRQ button — When the FRQ button is pressed, standby and active frequencies will be exchanged, the new frequency will become active, and the former active frequency will go into standby.

ADF button — This is a switch with two positions: ANT mode (out) and ADF mode (in). In the ANT mode, the loop antenna is disabled and the unit acts as a receiver. The indicator needle will remain at approximately the 90° relative position and the ANT annunciator light will illuminate. Clearer reception for station identification will be provided.

With the ADF button depressed, the unit is placed into the ADF mode and the loop antenna is enabled. The ADF annunciator light will illuminate and the indicator needle will point to the selected station. In order to tell if there is a sufficient signal for navigational purposes, place the unit back into the ANT mode (needle at 90°).

When switched to the ADF mode, the needle should seek the station in a positive manner, without excessive sluggishness, wavering, or reversals.

BFO button — Various parts of the world use an interpreted carrier for station identification purposes. A beat frequency oscillator function is provided to permit these stations to be identified more easily. Pushing the BFO switch will cause a 1000-Hz tone to be heard whenever there is a radio carrier signal present at the selected frequency. The BFO annunciator light also illuminates.

18.13.2 Operation

1. ON/OFF/VOL switch — ON.
2. Frequency select knob — Adjust (as required).
3. ADF button — Press (as desired).
4. BFO button — Press (as required).
5. FRQ button — Press (as desired).
6. FLT/ET button — Press (as desired).
7. SET/RST button — Press (as desired).

18.14 NAVIGATION AND NAVAIDS SYSTEM (C)

The navigation and NAVAID system consists of a NAV 1 and NAV 2 system, ADF system, marker beacon system, DME system, DME/TACAN system, and a transponder and altitude encoder system. This system is coupled with the compass/heading system and audio/ICS system.

The NAV 1 system is a VOR/LOC/TACAN consisting of a KNS-81 receiver, a KDI-206 CDI, a KI-525A HSI, a KDI-573 DME indicator, and associated antennas. The NAV 2 system is a global positioning system consisting of a KLN-900 receiver, database card, KA 92 antenna, a DME splitter relay, and two GPS panels.

18.15 NAV 1 RECEIVER (KNS-81) (C)

A KNS-81 receiver is installed in the radio console (Figure 18-11) as NAV 1. The KNS-81 consists of VOR/localizer receiver, RNAV computer, a glideslope receiver, and control function for the KTU-709 TACAN in a single unit. When combined with the CDI or HSI and DME indicator, the unit becomes a complete navigation system featuring three modes of VOR or TACAN operation (VOR, VOR RNV, VOR RNV APR, TAC, TAC RNV, TAC RNV APR) and ILS. The unit also simultaneously displays waypoint parameters of frequency, radial, and distance plus 1 of the 10 waypoints. It can display TACAN or VOR radial and DME distance information when the CHK button is depressed. It also can display bearing from the VORTAC or waypoint in the DME indicators in place of groundspeed when the RAD button is depressed.

The KNS-81 provides VOR and localizer capabilities within the frequency range of 108.00 to 117.95 MHz with 50-kHz spacing (200 channels). The KNS-81 ILS glideslope receiver covers 40 channels within the frequency range of 329.15 to 335.00 MHz (150-kHz spacing). Channeling for all operating modes is selected by the KNS-81 unit, which is located in the pedestal.

Additionally, an automatic dimming circuit is incorporated to compensate for changes in ambient light level and the control also features a nonvolatile memory that retains the last selected frequencies when power is turned off. No aircraft power or batteries are required for the nonvolatile memory.

18.15.1 Controls and Functions

USE button — Momentary pushbutton. Causes displayed waypoint to become active waypoint and caret display to go to FRQ mode.

RTN button — Momentary pushbutton. When pushed, causes active waypoint in use to be displayed and caret display to go to FRQ mode.

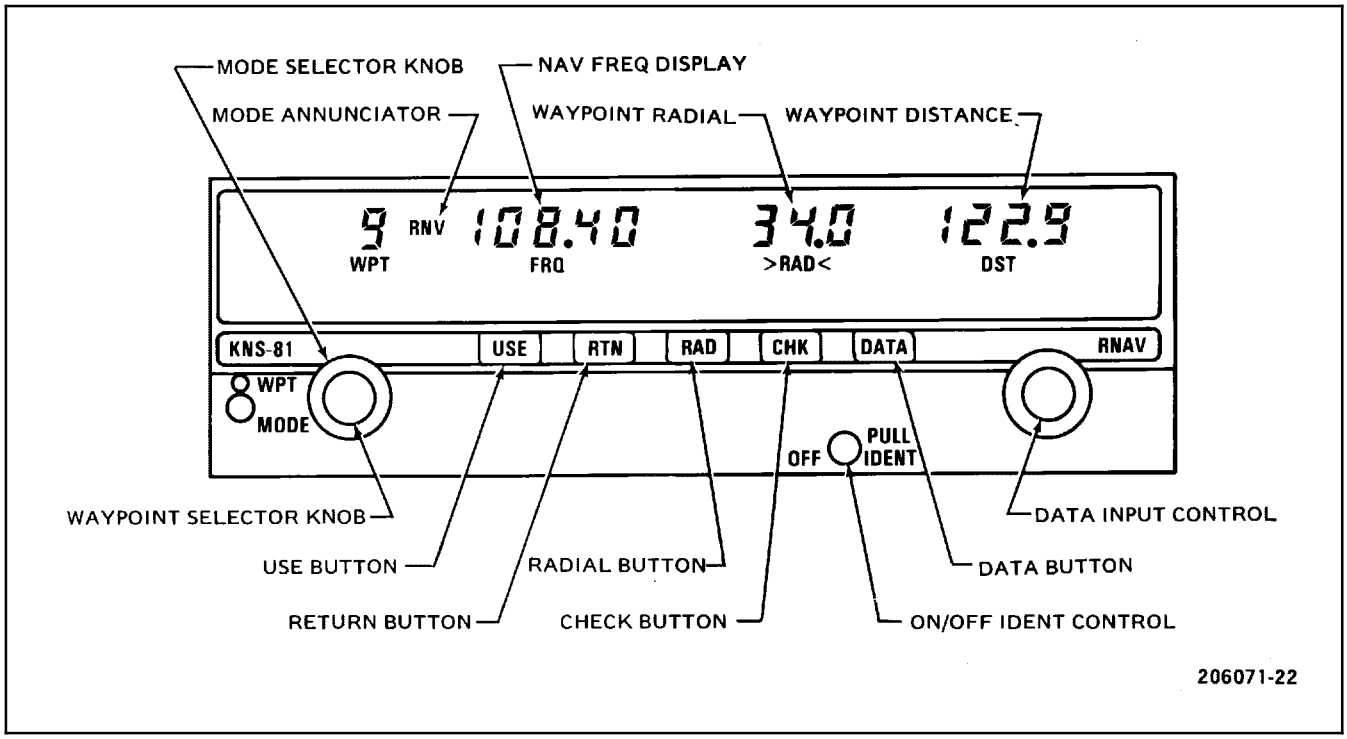

Figure 18-11. NAV Receiver (KNS-81)

RAD button — Two-position pushbutton. The KNS-81 is normally operated with the RAD button not pressed. When in depressed position, causes DME to display radial information instead of groundspeed. Radial displayed will be from the station in VOR mode and from the waypoint in RNAV modes.

CHK button — Momentary pushbutton. Causes radial and distance waypoint parameters to show radial and distance from VOR station instead and is read in place of preset radial and DME on the KNS-81.

DATA button — Momentary pushbutton. Causes waypoint data display to change from FRQ to RAD to DST and back to FRQ.

OFF/PULL/IDENT control — Power OFF/ON, pull out and select appropriate audio select button for audio identification. Rotate clockwise for increased audio level.

Data input control — Dual concentric knobs, right side of panel. Center knob has in and out positions.

Frequency data — Outer knob varies 1-MHz digit. A carry occurs from unit to 10 position. Rollover occurs from 117 to 108. Center knob varies frequency in 50-kHz steps (in or out position).

Radial data — Outer knob varies 10° digit. A carry occurs from the 10 to 100 position. A rollover to zero occurs at 360°. Center knob in position varies 1° digit. Center knob out position varies 0.1° digit.

Distance data — Outer knob varies 10 nm digit. A carry occurs from the 10 to 100 place. A rollover to zero occurs at 200 nm. Center knob in position varies 1 nm digit. Center knob out position varies 0.1 nm digit.

Dual concentric knobs on left side of panel.

WPT/MODE select. The outer knob changes the mode from VOR to VOR RNV to VOR RNV APR to TAC to TAC RNV to TAC RNV APR and rolls over. Center knob selects waypoint from 0 to 9 and rolls over.

18.15.2 Operation

1. OFF/PULL/IDENT control — ON.
2. MODE select knob — Select desired mode.
3. Data input control — Set (as desired).
4. WPT select knob — Set (as desired).
5. OFF/PULL/IDENT control — Pull. Check station identification (as desired) and ensure appropriate audio panel button is selected.
6. USE button — Press (as desired). Waypoint will become active.
7. RTN button — Press (as desired).
8. RAD button — Press (as desired).
9. CHK button — Press (as desired).
10. DATA button — Press (as desired).

18.16 COURSE DEVIATION INDICATOR KDI-206 (C)

The CDI (Figure 18-12) is located on the copilot instrument panel (Figure 2-4). The CDI displays TACAN, VOR, LOC, GPS, and glideslope relative bearing information received from either NAV 1 or NAV 2 through the use of a pushbutton located on the copilot GPS panel. Additionally, it provides visual indication of unreliable signals or equipment malfunctions via an intermittent TO-FROM arrow and NAV flag. The GS flag will be displayed whenever the radio is not operating on a LOC frequency, when the tuned LOC signal has no associated glideslope information, or when the tuned LOC glideslope signal is being received intermittently or not at all.

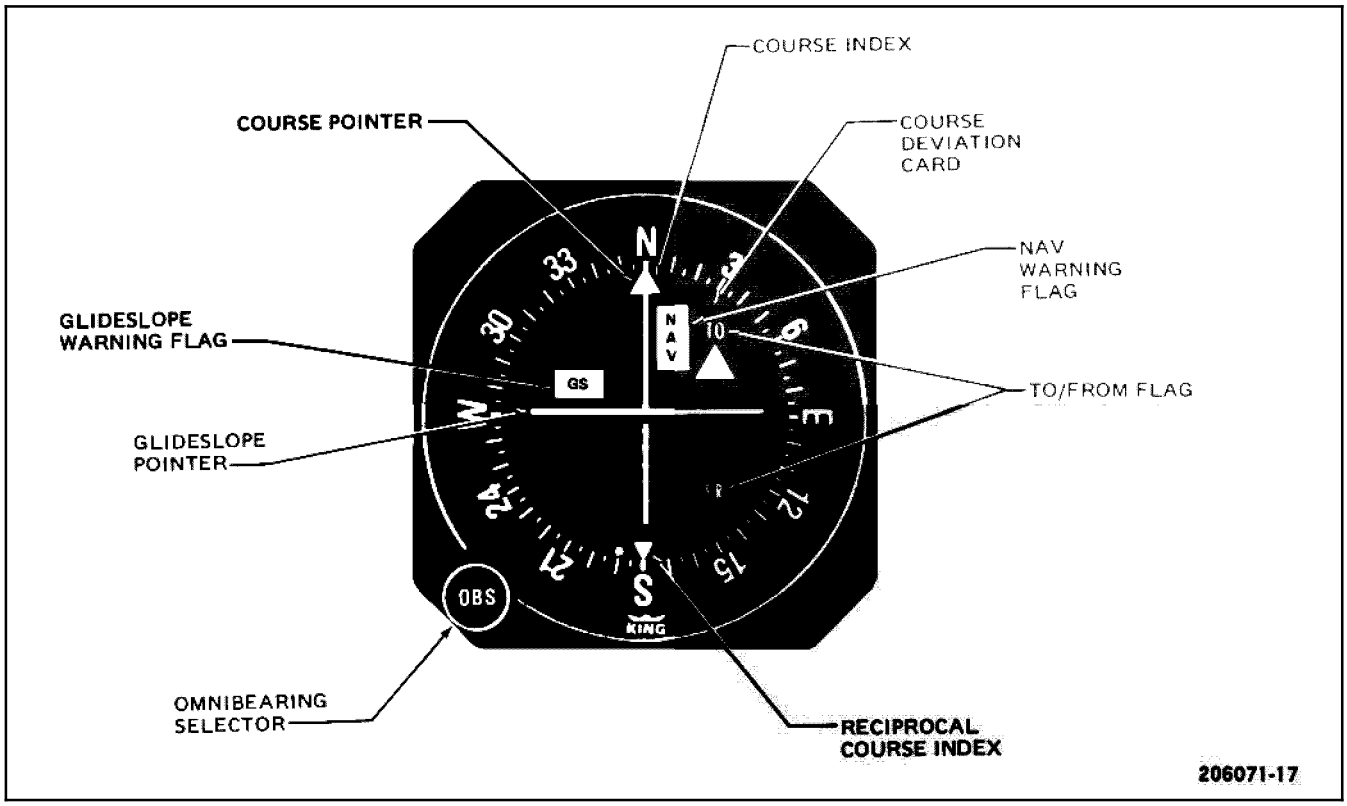

Figure 18-12. Course Deviation Indicator

18.16.1 Controls and Functions

Course pointer — Indicates deviation from selected TAC VOR radial or LOC path.

Course index — Provides reference point for course deviation card.

Course deviation card — Manually rotated card driven by OBS control to indicate desired VOR radial directly beneath course index.

NAV warning flag — Red NAV flag indicates VOR or LOC signal is unreliably weak or malfunction in receiver.

TO/FROM flag — Indicates whether flying selected radial would direct helicopter toward (TO) or from (FR) VOR station.

Reciprocal course index — Indicates radial 180° from selected radial.

Omnibearing Selector (OBS) — Drives course deviation card for course selection.

Glideslope pointer — Indicates deviation from glidepath.

Glideslope warning flag — Red GS flag indicates GS signal is unreliably weak or malfunction in receiver.

18.16.2 Operation

OBS — Set (as required).

Deviation scale — When tuned to a VOR frequency, each white dot represents 2° of deviation left or right of course. When tuned to a localizer, the deviation is one-half degree per dot. In RNAV “APR” mode, the scale is 0.25 nm per dot. In RNAV “EN ROUTE” mode, the scale is 1 nm per dot. When NAV 2 is selected on the copilot GPS panel, the scale is 5 nm, 1 nm, or 0.3 nm, depending on the GPS mode the pilot has selected.

18.17 NAV 2 RECEIVER (KLN-900 GPS) (C)

The KLN-900 global positioning system receiver (Figure 18-13) is installed as NAV 2 in the TH-57C. The KLN-900 is a satellite-based, long-range navigation system. It is FAA certified for IFR en route, terminal, and nonprecision approach operations. It incorporates an extensive database updated every 28 days that includes most information about the national aerospace system. For detailed operating instructions, see the KLN-900 Pilot Guide. The Pilot Guide does not contain the TH-57C installation information below.

WARNING

In the event of GPS failure, as signified by a NAV flag being displayed on the HSI/CDI, switch navigation sources and advise ATC of navigation loss. If a RAIM NOT AVAILABLE message is displayed on the KLN-900 at or after FAWP passage, abandon the approach and advise ATC.

Note

If the RAIM NOT AVAILABLE message is displayed on the KLN-900, the GPS receiver is no longer able to resolve position within the navigation tolerances required for IFR flight. If RAIM NOT AVAILABLE message is displayed, switch to an alternate means of navigation.

The KLN-900 replaces the KNS-81 navigation system in the NAV 2 position. It is located at the top of the center console to optimize display visibility. The GPS utilizes the NAV 2 circuit breaker and the single needle on both RMIs in the VOR position. The system is comprised of the KLN-900 receiver, database card, KA 92 antenna, a DME splitter relay, and two GPS panels (pilot and copilot).

A DME splitter, located above the copilot antitorque pedals, enables the pilot and copilot to select GPS distance or NAVAID DME information individually via the NAV 1-NAV 2 pushbutton switch PBS. Deviation information on the pilot HSI and the copilot CDI is also selected via the NAV 1-NAV 2 PBS. When the pilot and copilot select the same NAV source, the copilot CDI will become a repeater of the HSI, and a corresponding CRS INOP light will appear on the copilot GPS panel (Figure 18-14).TACAN azimuth will not be displayed when both pilot and copilot have selected NAV 2 (GPS) information. VOR and ADF azimuth will not be affected.

The DME function switch is removed from the pilot KDI-572, and the hold function is no longer operational. DME is secured via the AVIONICS MASTER switch or the DME circuit breaker.

The pilot and copilot GPS panels (Figure 18-14) consist of four and five lights, respectively, three of which are PBS. The MSG/WPT light alerts the pilot to a GPS message or an approaching waypoint. The MSG button on the KLN-900 must be depressed to check a message. The NAV 1-NAV 2 PBS toggles between the NAV1 and GPS distance and deviation as described above. The GPS CRS deviation is as described above. The GPS CRS/OBS LEG pushbutton switch toggles KLN-900 deviation between OBS and LEG modes. In the OBS mode, deviation is given in miles from the selected bearing. In the LEG mode, deviation is given in miles from a line connecting two selected waypoints. CDI scale factors vary; see the Pilot Guide for details. Depressing the OBS LEG switch on either the pilot or copilot side, or the OBS button on the KLN-900 will toggle the function. The GPS APR/ARM ACTV PBS will arm or disarm a GPS approach and indicates when a GPS approach is active

The copilot GPS panel is identical to the pilot GPS panel with the exception of the CRS INOP light located at the top of the copilot GPS panel.

If power to the GPS is lost, the pilot side will automatically display NAV 1 information. The copilot side will display DME distance but CDI will become inoperative with a flag. These conditions will occur regardless of the position of the NAV1-NAV2 PBS on each GPS panel. The single needle on each RMI will park at the 90-270 position if NAV (VOR) is selected.

The KLN-900 is integrated with other TH-57C avionics. It receives a heading input from the compass system and bearing selection from either the HSI or the CDI. The KLN-900 makes outputs to the single needles, the distance displays, the HSI and CDI, and the intercom system via the NAV 2 button on the audio panel.

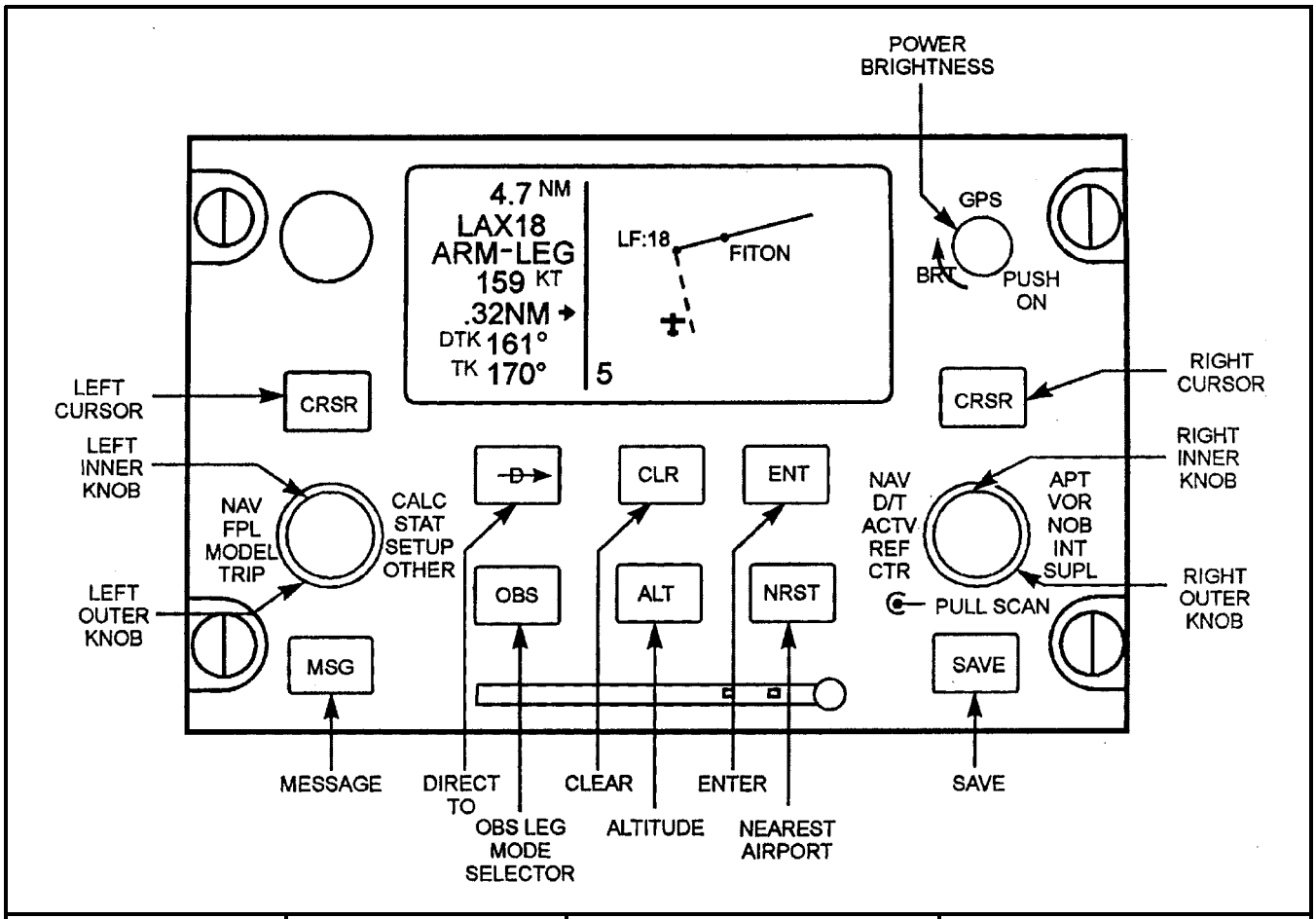

CONTROL	TYPE	OPERATION	FUNCTION
1. Power/ Brightness	Knob/switch	Push to turn on. Rotate to adjust display brightness. Pull to turn off.	Display brightness changes with knob position.
2. CRSR (left side)	Pushbutton	Press to activate/deactivate left cursor.	Cursor field displays in inverse video.
3. CRSR (right side)	Pushbutton	Press to activate/deactivate right cursor.	Cursor field displays in inverse video.
4. Left Outer Knob	Outer concentric knob	Rotate to select mode: CALC STAT SETUP OTHER TRIP MODE FPL NAV Rotate to select left cursor position.	Display: Calculator pages Status pages Setup pages Other pages Trip planning page Mode Flight plan pages Navigation pages Left cursor field moves

Figure 18-13. KLN-900 GPS Control Functions (Sheet 1 of 2)

CONTROL	TYPE	OPERATION	FUNCTION
5. Left Inner Knob	Inner concentric knob	Rotate to select page. Rotate to set left cursor field values.	Select page if more than one page is available. Increment/decrement value of left cursor field.
6. Right Outer Knob	Outer concentric knob	Rotate to select mode: APT VOR NDB INT SUPL CTR REF ACTV D/T NAV Rotate to select right cursor position.	Display: Airport pages VOR waypoint NDB waypoint Intersection waypoint Supplemental waypoint Center waypoint pages Reference waypoint Active waypoint Distance/time pages Navigation pages Right cursor field moves
7. Right Inner Knob	Inner concentric knob	Rotate to select page. Rotate to set right cursor field values. Pull knob out to scan waypoints.	Select page if more than one page is available. Increment/decrement value of right cursor field. Unit scans for nearby waypoints.
8. Direct To	Pushbutton	Press to activate direct to navigation.	DIRECT TO page is displayed.
9. CLR	Pushbutton	Press to clear entry.	Current entry will be cleared.
10. ENT	Pushbutton	Press to enter.	Display or entry is approved.
11. OBS	Pushbutton	Press to toggle between OBS and LEG mode.	Select OBS or LEG mode.
12. ALT	Pushbutton	Press to select altitude page.	Altitude page will be displayed.
13. NRST	Pushbutton	Press to display nearest airport waypoint page.	Waypoint page for nearest airport will be displayed.
14. MSG	Pushbutton	Press to display message page.	Message page will be displayed.
15. SAVE	Pushbutton	Press to create a user waypoint at present position.	Supplemental waypoint page will be displayed for new waypoint at present position.

Figure 18-13. KLN-900 GPS Control Functions (Sheet 2)

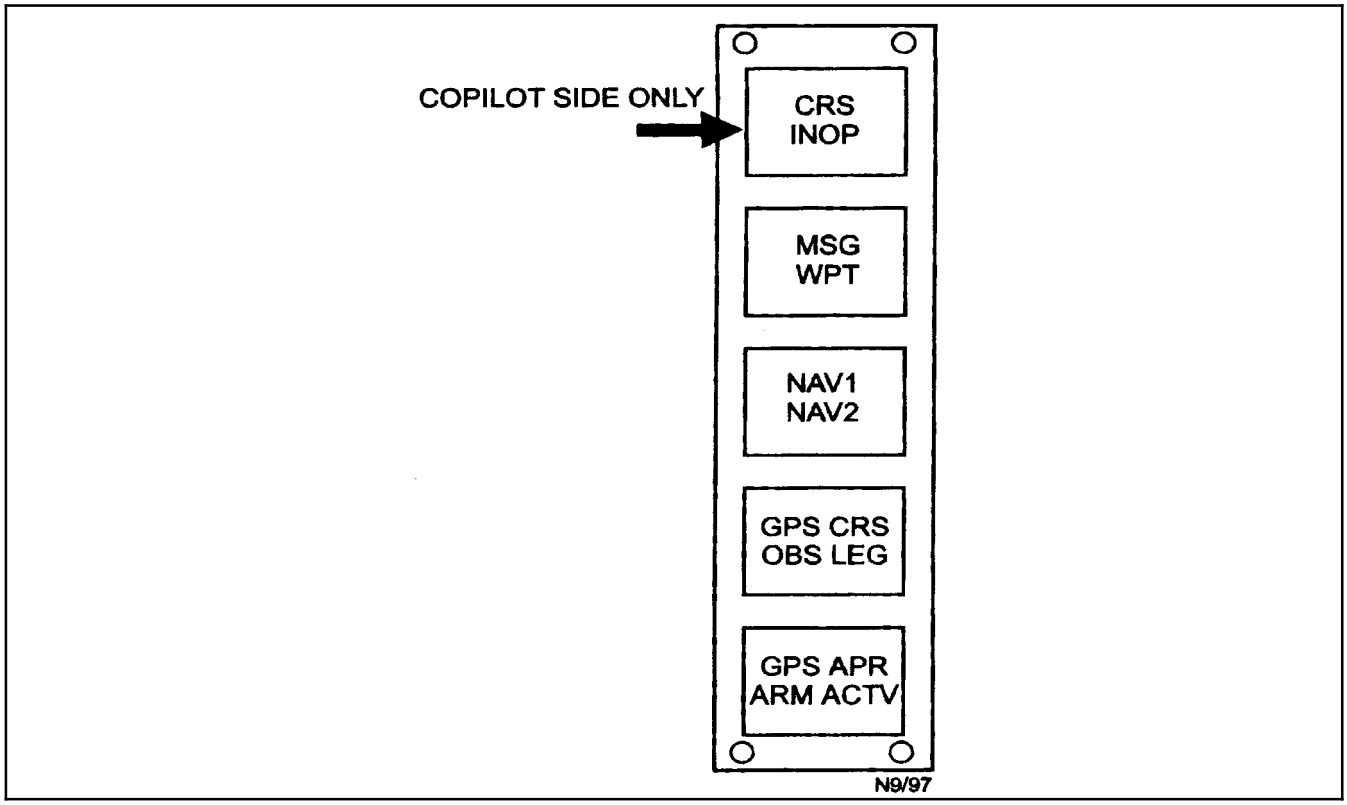

Figure 18-14. GPS Panel

18.18 HORIZONTAL SITUATION INDICATOR KDI-525A (C)

The HSI (Figure 18-15) is located on the pilot instrument panel (Figure 2-4). The HSI displays TACAN, VOR, LOC, GPS, and glideslope relative bearing information received from either NAV 1 or NAV 2 through use of a pushbutton located on the pilot GPS panel. Additionally, it provides visual indication of unreliable signals or equipment malfunctions via a NAV flag. The glideslope marker will appear only if the KNS-81 receiver is receiving a reliable glideslope signal and the aircraft is within glideslope parameters. The HDG flag will appear if system power is lost or gyro spin motor operation is inadequate.

18.18.1 Controls and Functions

Heading select marker — Provides reference for selected heading to be flown. The marker moves with compass card except while being mechanically positioned by heading select knob.

Dual glideslope pointer — Indicates helicopter position above or below glideslope signal received from NAV radio. Pointers retract when signal is unreliable.

Symbolic aircraft — Shows helicopter relationship to the compass and the selected VOR or LOC course.

VOR and localizer deviation bar — Indicates position of aircraft in relation to VOR or localizer signal.

Course select knob — Used to position course pointer to the desired VOR radial (to or from) for the NAV receiver.

Compass card — Displays helicopter magnetic heading against lubber line.

Heading select knob — Used to position heading marker.

To-from indicator — Indicates flying the selected course on the course pointer, which will direct the helicopter to or from the VOR station.

Course select pointer — Indicates the selected VOR radial from NAV radio. Course pointer rotates with adjustment made on course select knob.

Compass warning flag — Flag indicates gyromagnetic compass is unreliable or not operating. The magnetic heading under the lubber line will be unreliable.

Lubber line — Lubber line points out helicopter magnetic heading as indicated by compass card.

NAV warning flag — Flag indicates unreliable signal from NAV 1 receiver.

18.18.2 Operation

1. Heading select knob — Set (as required).
2. Course select knob — Set (as required).

To prepare for an ILS approach, tune the NAV receiver to desired frequency. When a reliable signal is received, the NAV warning flag will disappear.

For a front or back course approach, rotate the course select knob to set the course select pointer on the inbound localizer course. As with normal navigation, the deviation bar represents the desired course. This representation works for both front and back course approaches.

When flying an ILS course and a usable glideslope signal is received, the glideslope deviation pointers will become visible on both sides of display. When in operation, the deviation pointers represent the position of the glideslope path relative to the aircraft.

CAUTION

Localizer intercepts within 90° ±10° of the localizer course should be avoided because of antenna signal degradation.

18.19 VISUAL COMMUNICATIONS

18.19.1 Aircraft Lighting

Aircraft lighting during night operations ashore shall be used as set forth in the current editions of NWP 41 and OPNAVINST 3710.7. Navigation lights should not be used as a means of interplane communications.

18.19.2 Ground-to-Air Signals

Ground-to-air signals, which include body signals, panel signals, and international ground-air emergency code, shall be in accordance with the current edition of NWP 41. Aircraft maneuvers as an acknowledgment of ground-to-air signals shall be in accordance with NWP 41. Ground panel and helicopter landing site marking and ground-to-air pyrotechnic and smoke signals are shown in NWP 41. When a pyrotechnic kit is carried inside the helicopter, all crewmembers shall familiarize themselves with its contents and the operations of the components.

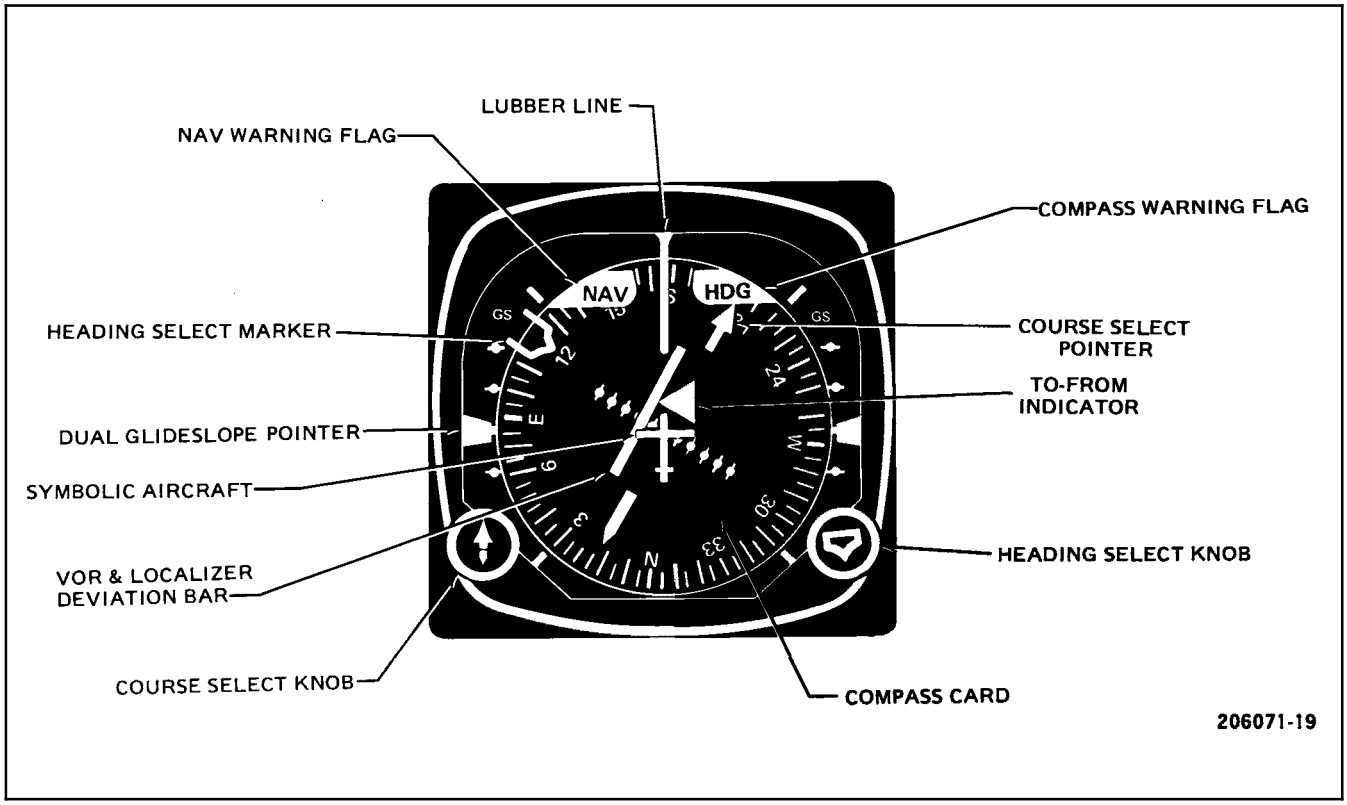

Figure 18-15. Horizontal Situation Indicator

PART VIII

Weapon Systems

Chapter 19 — Weapon Systems

CHAPTER 19

Weapon Systems

This section of the manual is not applicable to this model helicopter.

PART IX

Flightcrew Coordination

Chapter 20 — Cockpit Management

CHAPTER 20

Cockpit Management

20.1 INTRODUCTION

Mishap statistics show that between 80 and 90 percent of Naval aviation mishaps are caused by human error attributable to pilots. As the name implies human error is a characteristic that is intrinsic to all humans, and all pilots regardless of experience. Error is an inevitable result of the natural limitations of human performance and the function of complex systems.

Historically, errors made within the cockpit have received the most attention during mishap investigation but it is important to emphasize that pilots are not the sole or even the primary source of error. Human error related mishaps most often involve errors at multiple organizational levels and are committed by actors both inside and outside of the cockpit.

Aircraft mishaps are best understood as system rather than single-point failures in which the cumulative effect of multiple, minor errors leads to an environment in which the likelihood of a mishap is greatly increased. This is best illustrated by the Cumulative Act Effect Diagram, a.k.a., Swiss Cheese Model (Figure 20-1).

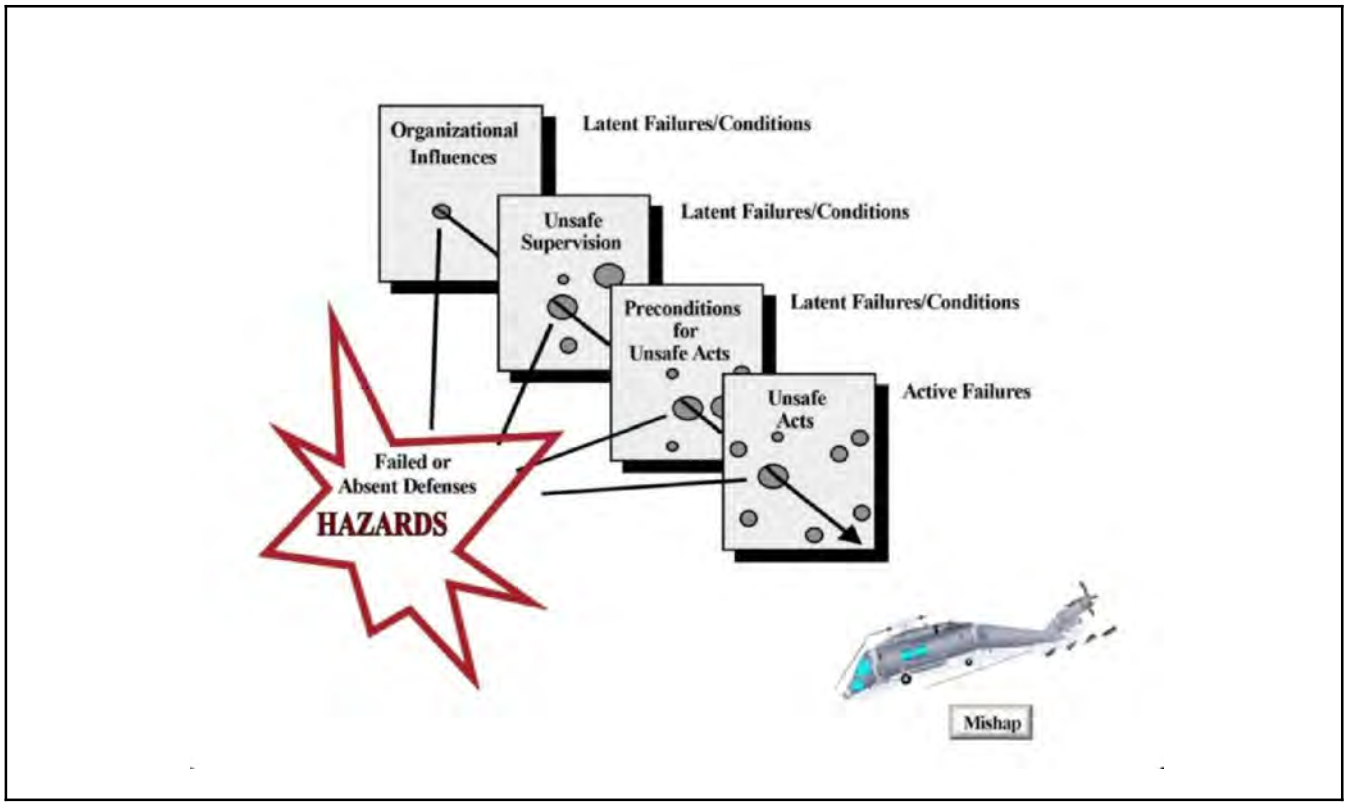

Figure 20-1. Cumulative Act Effect Diagram (Reason, James (1990). Human Error)

20.1.1 Systematic Risk and Error Management

It is a fact that risk is inherent to flight and error is inherent to human performance and while neither can be completely eliminated they can be managed and mitigated. Human factors research, validated by mishap data and vetted by fleet pilots has provided us with the decision making tool of Operational Risk Management (ORM) and the cockpit management tool of Crew Resource Management (CRM). Taken together, ORM and CRM provide aircrews with a systematic means of managing risk and error.

20.2 OPERATIONAL RISK MANAGEMENT

ORM is a decision-making tool used to manage risk so that the mission can be accomplished with minimum impact. To maximize effectiveness ORM should be a continuous process based on the collective experience of the aircrew and should be as in-depth as time allows.

20.2.1 Three Levels of ORM

ORM should be conducted in the greatest detail that time and resources allow. Complex and higher risk missions require more detailed planning in order to sufficiently anticipate and mitigate risks.

1. Time-critical: A quick mental review of the five-step process when time does not allow for any more (i.e., in-flight mission/situation changes).
2. Deliberate: Experience and brain storming are used to identify hazards and is best done in groups (i.e., fly-overs).
3. In-depth: More substantial tools are used to thoroughly study the hazards and their associated risk in complex operations (i.e., hurricane evacuations).

20.2.2 Four ORM Principles

Risk for every mission should be evaluated and managed according to the following four criteria:

1. Accept risk when benefits outweigh the cost.
2. Accept no unnecessary risk.
3. Anticipate and manage risk by planning.
4. Make risk decisions at the right level.

20.2.3 Five-Step ORM Process

The ORM assessment is initially completed during preflight mission analysis and is continually updated in flight as the situation changes. It follows a five-step sequence:

1. Identify hazards (e.g., ORM brief, weather brief).
2. Assess hazards (e.g., high winds, low ceilings, fatigue, lack of flight currency).
3. Make risk decisions (e.g., alter route of flight or takeoff time).
4. Implementing controls (e.g., go and no-go criteria).
5. Supervise (e.g., discipline and CRM).

20.2.4 Time Critical ORM Process (ABCD Process)

Time critical ORM is a decision making process designed for applying ORM during mission execution.

1. Assess the situation: What has changed and what will happen next?
2. Balance resources and options: What are the available options and resources?

3. Communicate intentions: What do I know and who needs to know it?

4. Do and debrief: Execute the plan and capture lessons learned in order to improve future performance.

20.3 CREW RESOURCE MANAGEMENT

The objective of CRM is to improve mission effectiveness by maximizing crew coordination in order to minimize crew-preventable errors. Effective aircrews display good CRM by the use and integration of all available knowledge, skills, and resources both internal and external to the cockpit (automation, aircrewman/observer, maintenance personnel, ATC, duty officer, fellow pilots on squadron common frequency) in orderly to safely and efficiently accomplish the mission.

20.3.1 Seven CRM Skills

CRM incorporates the use of specifically defined behavioral skills into all aviation operations. These skills were developed based on fleet-wide surveys of widely held beliefs of what constitutes an effective aircrew. The skills were further validated through exhaustive analysis of Naval mishap records and can accurately be described as "written in blood". Flight crews that use the following skills and behaviors will not only reduce the potential for mishaps but also improve mission effectiveness.

1. Decision making (DM): The ability to choose a course of action using logical and sound judgment based on available information.

2. Assertiveness (AS): An individual's willingness to actively participate, state, and maintain a position, until convinced by the facts that other options are better. Errors committed by the pilot in command (PIC) tend to be mishap causal factors more often than errors committed by the copilot (CP) due to lack of CP assertiveness and monitoring.

3. Mission analysis (MA): The ability to develop short-term, long-term, and contingency plans and to coordinate, allocate, and monitor crew and aircraft resources. Many mishaps have their root in faulty mission analysis and flight planning.

4. Communication (CM): The ability to clearly and accurately send and acknowledge information, instructions, or commands, and provide useful feedback. Excessive, vague or poorly timed communication can be just as much of a detriment as too little communication.

5. Leadership (LD): The ability to direct and coordinate the activities of other crewmembers or wingmen, and to encourage the crew to work together as a team.

6. Adaptability/flexibility (AF): The ability to alter a course of action based on new information, maintain constructive behavior under pressure, and adapt to internal and external environmental changes. AF is enabled by a thorough mission analysis that anticipates and plans for likely in-flight changes.

7. Situational awareness (SA): The degree of accuracy by which each aircrew member's perception of the current environment mirrors reality. SA forms the central organizing feature from which decision making takes place. SA exists on the three following levels:

   a. Level I SA, Perception: Perception of individual elements in the environment such as aircraft mechanical condition, position, traffic, terrain, weather and ATC instructions.

   b. Level II SA, Comprehension: Comprehension of how the elements in the operating environment relate to each other and immediately impact mission accomplishment and safety margin.

   c. Level III SA, Projection: Projection of the future actions of elements, which gives pilots the time necessary to proactively decide on the most favorable course of action to accomplish the mission and maintain the required safety margin.

20.3.2 Workload Management and Task Saturation

All aircrew have a limited capacity for tasking and information. Once information flow exceeds the pilot's ability to mentally process it, any additional information will become unattended or displace other information or tasks already being processed. This is termed channel capacity and can be likened to power required exceeding power available (Figure 20-2). Once channel capacity is reached only two alternatives exist: shed the unimportant tasks or perform all tasks at a less than optimal level (increased human error).

The following are common tactics for reducing an aircrew's vulnerability to human factors errors caused by task saturation:

1. Reschedule: Move activities from a higher to a lower workload phase of flight in order to reduce the likelihood of task saturation.
2. Task shed: Delegate tasks to the MP, aircrewman or observer any task that interferes with the FP's ability to maintain the aviate-navigate-communicate task hierarchy.
3. Assign redundancy: When two tasks must be performed at the same time communicate the situation to other aircrew to provide redundancy. As an example, when a checklist is interrupted by ATC communication the specific point of interruption can be announced as a reminder to the whole crew by stating, "holding checklist at item 3".
4. Set flags: Flags are visual or tactile cues that serve as a reminder to accomplish a task that is likely to be otherwise forgotten. For example, prior to an instrument departure at night the FP can turn on his or her liplight to serve as a reminder to complete the level-off checklist.
5. Memory chunking: Research has shown that the human mind can only hold a finite number of items in working memory. Memory chunking in the cockpit is the process of attaching an unexpected, non-routine task to a preexisting habit pattern to form a more easily remembered "chunk" so that new task is less likely to be forgotten. For example, if local SOP requires you to turn the anticollision lights off when clear of the active runway, perform the task when you would normally switch the radio frequency and transponder code.

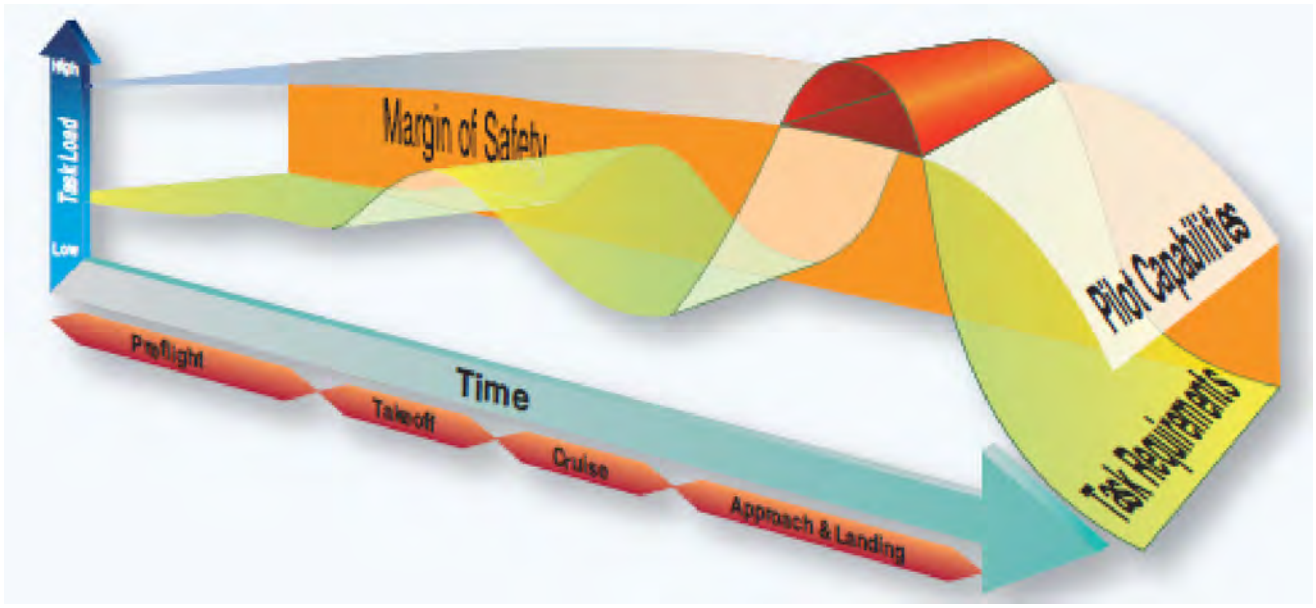

Figure 20-2. Task Saturation (FAA-H-8083-21, FAA Helicopter Flying Handbook)

20.3.3 Avionics and Automation Management

The purpose of the avionics and automation is to assist the aircrew with mission accomplishment by decreasing workload and increasing SA. Workload is decreased by presenting information in an easy to use format (i.e., GPS moving map, ADF countdown timer). It also allows the aircrew to shift workload from higher workload phases of flight such as the approach and landing to lower workload phases as flight such as pretakeoff and en route. This is due to the fact that avionics programming typically takes place on the ground or while en route but the benefits are felt during en route navigation or while conducting an instrument approach.

Automation increases SA by presenting information that would not otherwise be readily available (i.e., ground track via Super NAV 5 page and flight time remaining via the D/T 1 page). In certain dynamic situations such as mechanical emergencies, automation may increase workload and decrease SA due to longer setup and heads-down time. Ultimately, the level of automation used at any time should be the most appropriate to reduce aircrew workload and increase situational awareness, thereby enhancing mission effectiveness and safety margin.

While basic skills should always be maintained due to the possibility of equipment failure, care should be taken to avoid the negative impact on cockpit management habits of training primarily with simulated failed automation. Flight skills developed for use at lower automation levels frequently do not scale up to higher automation levels.

20.3.4 Automation Pyramid

The automation pyramid is a common model used for explaining the use of technology in technologically advanced aircraft. While the TH-57B/C is not a technologically advanced aircraft it has a wide variety of avionics available for managing in-flight tasks and so the automation pyramid remains a useful model. The hierarchy of automation can be thought of as a pyramid, where flight with reference to only the NAV 1 and RMI is the bottom of the pyramid and use of HSI, GPS for the entire route of flight, and RADALT set to provide CFIT protection is at the top. (Figure 20-3). As level increases workload decreases and SA increases and vice versa.

Aircrews should strive to operate at the highest level of automation consistent with the mission. This will create an environment where aircrews operate with the lowest workload and the highest level of situational awareness.

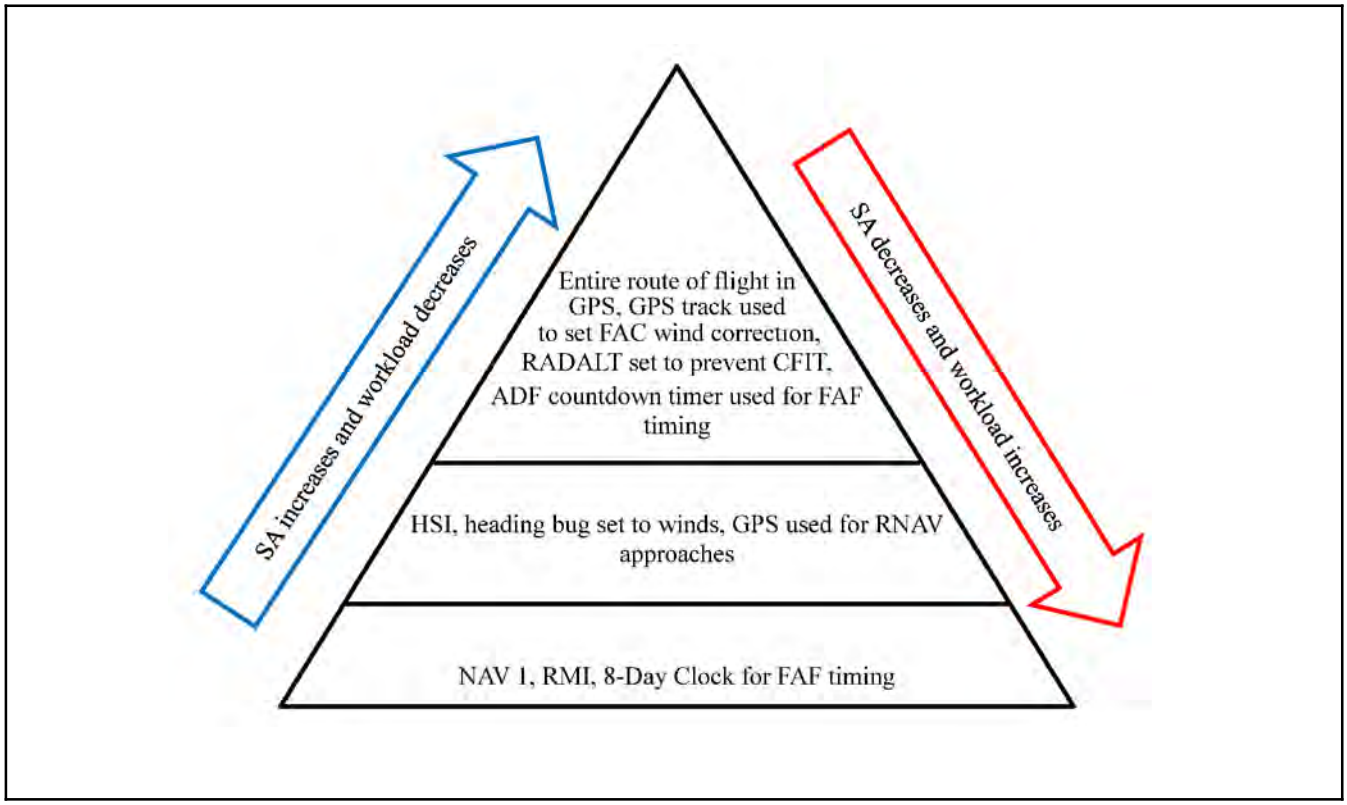

Figure 20-3. Automation Pyramid

20.3.5 Sterile Cockpit

During critical phases of flight aircrews should avoid nonessential activities that do not directly contribute to aviate-navigate-communicate in order to prevent error due to distraction. Examples of critical phases of flight are when setting up or conducting an IAP, while operating in the traffic pattern, and while conducting a NATOPS system failure or emergency procedure.

CAUTION

Adherence to sterile cockpit procedures is not intended to prevent performance of NATOPS procedures, callouts, CRM or any other activity that contributes in any way to the aircrews' ability to aviate, navigate, and communicate.

20.4 AIRCREW AUTHORITY POSITIONS

The TH-57B/C is the sole platform for conducting USN/USMC/USCG Advanced Helicopter and Intermediate Tiltrotor training and as such is typically manned by an instructor pilot (IP) and student naval aviator (SNA). The design of the TH-57B/C allows the pilot in command (PIC) to sit at either the left or right pilot station when flown multipiloted. At any given instant, the aircraft may be under the physical control of the pilot in either seat. If the aircraft is flown single piloted with an observer, then the PIC shall sit right seat. To avoid confusion between who is in charge and who is flying, it is essential that all flight personnel understand the distinctions in this section. For certain missions such as tactical or instrument training the aircraft may additionally be manned with an enlisted aircrewman or student observer.

20.4.1 Flight Leader

The flight leader has responsibilities in addition to those as pilot in command. They include the following:

1. Ensuring necessary planning is completed for multi-aircraft operations.
2. Ensuring formation segment of the flight is adequately briefed.
3. Ensuring safe conduct of multi-aircraft operations.
4. Brief: When briefing multi-aircraft events, the NATOPS brief may be conducted with the flight brief. The flight leader shall ensure each aircraft crew briefs crew resource management separately, preferably after the flight brief and other parts of the NATOPS brief.

20.4.2 Pilot In Command

The PIC is responsible for the safe and orderly conduct of the flight per OPNAVINST 3710.7 and may be a designated PQM or a safe-for-solo certified SNA. The PIC shall functionally place his or herself in the position where he or she can best ensure the outcome of the flight, which will often be as the monitoring pilot rather than the flying pilot.

20.4.3 Copilot

The CP is second in command of the aircraft and shall assist the pilot in command in the safe and orderly conduct of the flight.

20.4.4 Aircrewman

The aircrewman is the PIC's extension of authority in the cabin section. He or she is responsible for monitoring externally transported cargo, assisting with aircraft clearance during confined area and pinnacle landings, and ensuring the orderly transportation of passengers. Additionally the aircrewman will monitor aircraft performance and immediately advise the PIC of any discrepancy.

20.4.5 Observer

The observer (OBS) is the crewmember who occupies a rear seat for the primary purpose of visual lookout but may be tasked for any purpose assigned by the PIC. The observer shall be familiar with ICS operations and shall be briefed on lookout doctrine and applicable emergency procedures. The observer normally sits in the passenger compartment on the same side as the hooded pilot. In certain cases, the PIC may fly with an observer at a pilot station. When this is done, the PIC shall sit in the right seat and the observer in the left. An observer seated at a pilot station shall be briefed on any specific duties he may perform at that station.

20.5 AIRCREW OPERATIONAL POSITIONS

20.5.1 Monitoring Pilot

The MP is the pilot not manipulating the aircraft flight controls. The MP shall constantly monitor all maneuvers being performed by the FP, bringing attention to deviations from normal operations and potentially unsafe situations, regardless of differences in designations or rank. The MP should handle any cockpit duty that may potentially distract the FP from flying the aircraft.

Note

The MP should notify the FP before changing avionics, moving a switch or resetting/pulling a circuit breaker.

20.5.2 Flying Pilot

The FP is the pilot manipulating the aircraft flight controls. Cockpit duties that may interfere with the FP's ability to maintain flight within established parameters should be delegated to the MP, aircrewman or observer.

20.6 GENERAL CRM PROCEDURES

20.6.1 Checklist Procedures

1. The challenge-reply checklist method shall be used for all checklists unless specified otherwise in paragraph 2 of this section. When using the challenge-reply checklist method, one crewmember reads the challenge and the other crewmember performs the action and responds with the reply indicating that the task is complete.

2. The challenge-reply checklist method is not required for the Hydraulics Check, Instrument Flight, Level-Off, Hot Refuel, and Post-Refuel/Hotseat checklists but may be used time and situation allowing. The crewmember initiating the checklist shall physically reference the checklist during completion and should announce initiation of the checklist, any abnormalities when encountered, and checklist completion.

3. If the completion of any checklist is interrupted, the crewmember performing the checklist should announce over ICS, "holding checklist at [item]". When the checklist is resumed the crewmember performing the checklist should announce over ICS, "resuming checklist at [item]" and the held item should be repeated.

20.6.2 Emergencies and System Failures

The content of this section is designed to be used as a guide and is not intended or designed to be used as a checklist. The guidance that follows cannot address every possible circumstance and shall not be allowed to infringe on the pilot in command's ability to safely and efficiently execute the flight.

1. FP - Maintain control of the aircraft. Execute the critical memory items requiring control input and direct the MP to perform the required memory items not requiring control input.

Note

Only critical memory items (*) should be verbalized by the FP. The FP should direct the MP to refer to the PCL for non-memory procedures.

2. MP – Open the PCL to the applicable procedure and read it one step at a time to include notes, cautions, and warnings.
3. FP – As required by the situation, direct the MP to move switches and reset/pull circuit breakers.

Note

If the FP is the PIC and desires to personally execute troubleshooting, secure systems, or pull circuit breakers he or she should transfer controls to the MP.

4. MP – Move switches and reset/pull circuit breakers one at a time. The MP may ask the FP, aircrewman or observer to provide verbal concurrence prior to moving a switch or resetting/pulling a circuit breaker.

Note

The MP should not move switches, circuit breakers or otherwise change the cockpit configuration without the direction of the PIC.

5. MP – As required by the situation and as tasked by the PIC make a MAYDAY, emergency or PANPAN call and squawk 7700. The "SAVE" button on the GPS may be used to quickly obtain the aircraft's position if a MAYDAY call is required.
6. Aircrewman/observer – Assist the FP as directed.

20.6.3 Spatial Disorientation

Spatial disorientation (SD) is defined as an erroneous sense of one's position and motion relative to the plane of the earth. SD is not a character flaw but is the natural result of humans operating in an environment in which they are not physiologically or psychologically adapted for. All aircrew regardless of rank or experience are susceptible to SD. The following situations have proven to increase the risk of SD:

1. Inadvertent IMC.
2. VFR in IMC (common at night when cloud clearances are maintained but there is no visible horizon).
3. In and out of the clouds.
4. Task saturation and distraction.
5. Lack of instrument currency (< 1 instrument approach and 1.0 hour of instrument flight time in the past 30 days).
6. Fatigue.

20.6.3.1 Two-Challenge Rule

Upon seeing a deviation from briefed airwork parameters or another unsafe situation the MP shall perform the following procedure:

WARNING

Aircrew shall not wait until an unsafe situation has developed before taking the controls. Depending on altitude above terrain and the magnitude of the airwork deviation, a one or no-challenge rule may be more appropriate.

Note

The FP and MP should consider using the observer or aircrewman to help monitor the flight instruments if SD has occurred or is likely to occur. If part of a formation, wingmen should be tasked to provide notification of exceedance of the BAW parameters specified in the NATOPS cockpit brief.

1. Notify the FP with a descriptive statement explaining what is happening. For example during Inadvertent IMC if the MP noticed that the FP was slowing excessively the MP would say, "You're 10kts slow and decelerating."
2. If no correction or response then assertively notify the FP with a directive statement of how to correct the situation and a descriptive statement explaining what is happening. For example, "Push the nose over to 5° nose down, you're 10kts slow and decelerating."
3. If there is still no response or correction, the MP shall take the controls and execute an unusual attitude recovery if necessary.
4. Once aircraft control is regained the former MP shall utilize an instrument talk-on in order to reorientate the former FP.

WARNING

It is not unheard of for both pilots to have spatial disorientation at the same time. If such a situation occurs both pilots should coordinate their perceived instrument indications and control inputs over the ICS.

20.7 MISSION SPECIFIC CRM PROCEDURES

20.7.1 IFR CRM and Callouts

The intent of this section is to offer specific CRM guidance in addition to the general guidance provided by the CRM skills and behaviors. Callouts enhance CRM by standardizing cockpit communication during high tempo, low margin of error phases of flight by streamlining coordination and making errors immediately obvious. The use of callouts has been in use outside of Naval helicopter training for many years and has proven to greatly reduce human factors mishaps by targeting specific flight procedures where errors that precipitated mishaps had previously occurred.

Callouts cannot address every possible circumstance and shall not be allowed to infringe on the pilot in command's ability to safely and efficiently execute the flight. Situations will occur in which it is desirable to miss a callout in order to maintain the appropriate aviate – navigate – communicate priority hierarchy.

In order to enhance MP assertiveness and situational awareness, the FP should avoid preempting the MP's callouts.

20.7.1.1 Missed Callouts

When noticing that the MP has missed a callout, the FP should question the MP of the missed call in order to ensure both pilots agree with the position of the aircraft. For example, if the MP does not call "100' prior", the FP should question the MP on the missed call by saying "confirm 100' prior" to ensure that the MP agrees that the aircraft is 100' prior to the level off altitude.

It is allowable during training and check flights for the instructor or check pilot to intentionally miss callouts in order to evaluate the student's situational awareness. Instructor and check pilots are cautioned to avoid routinely missing callouts because it may encourage a single-pilot mentality in the student. Additionally, local instructions may abbreviate the callouts specified herein in order to enable flight training.

20.7.1.2 All Phases of Instrument Flight

1. MP - Announce deviations from briefed airwork parameters and take the controls if necessary in accordance with the two-challenge rule.
2. All - Acknowledge RADALT tone/light.
3. MP – Announce "heads down" when more than momentarily diverting attention from the flight instruments.

4. FP – Transfer controls if desiring to divert attention from the flight instruments more than momentarily.
5. MP – If desired by the PIC, provide ICS callouts 100' prior to any assigned altitude, 10° prior to any assigned heading, and 0.5 DME prior to any fix.
6. MP – Announce lack of concurrence with approach setup, holding entry or failed card heading computation only after the FP has announced his or her intentions.
7. All – Prior to transferring controls the off-going FP should conduct a control transfer brief to include assigned heading, altitude, desired airspeed and clearance limit if applicable. The control transfer brief should also include any impending action that may be required while the "on-coming" FP has the controls.

20.7.1.3 Takeoff & Departure

1. MP – During an instrument or shipboard takeoff call torque above 50 percent until through translational lift and stabilized in a climb. Monitor altitude and airspeed to confirm that the aircraft is not descending toward the water or slowing to a HOGE and report, "three rates of climb, positive airspeed."
2. FP – Call for the MP to perform the level-off checklist or transfer the controls in order to personally perform it.

20.7.1.4 En route and Holding

1. OBS or MP – Read back and if visible, verify fuel quantity and time when reported in order to prevent transcription errors. Calculate and report fuel burn rate and time remaining until NATOPS minimum fuel. The MP will perform this calculation when an observer is not part of the crew such as during simulator events and INAV flights.
2. OBS or MP – Calculate final approach timing whenever tasked by the FP.

20.7.1.5 Approach & Landing

During training flights the SNA should transfer controls in order to complete approach setup. During approach setup the MP should at a minimum set his or her RADALT to the HAT/HAA/HAL or other altitude that will provide warning of unrecognized descent through MDA or DH. Once the SNA is complete with approach setup and has taken the controls back, the instructor pilot or solo observer will verify the approach setup. During instrument approaches both pilots should have the approach procedure out.

WARNING

With the RADALT set to the HAA/HAT/HAL it is possible to descend below MDA/DH without a RADALT tone/light due to differences in elevation between the terrain overflown on final and the touchdown zone or airfield elevation. Regardless of RADALT tone/light, at no time shall the crew descend below MDA or DH unless in compliance with the requirements of OPNAVINST 3710.7 paragraph 5.3.5.4.

1. FP – Ask the MP for each step-down and course change in order to minimize heads-down time. The FP should verify the information provided by the MP if workload allows on a not to interfere basis with maintaining aircraft control.
2. FP – Report leaving a step-down altitude, the altitude descending to and the applicable DME when the descent should be complete per the instrument approach procedure. Example, "Leaving 1700' for 1400' by 5 DME."
3. MP – During instrument approaches with the required references in sight report "runway in sight" or "approach lights in sight", clock position or other callouts, as applicable. Be prepared to take the controls if given and conduct a modified normal approach in accordance with the guidance provided by the PIC during the NATOPS crew brief.

4. FP – If break out occurs below 1000' above airfield elevation, the FP should transfer the controls to the MP and maintain an instrument scan until the other pilot reports that the landing is assured. In the event that inadvertant IMC occurs while maneuvering to land, the pilot maintaining the instrument scan shall be immediately ready to assume the controls and execute the ATC climb-out or missed approach instructions.

5. MP – If a missed approach is required the MP shall read the ATC climb-out instructions. If climb-out instructions are not provided the MP shall read the published missed approach instructions.

20.7.2 Functional Checkflights

Coordination of test procedures while ensuring lookout doctrine and other required duties.

20.7.3 Formation Flights

Coordination between aircraft, including lookout doctrine, is essential. Coordination in each cockpit should stress the requirement of the FP to concentrate on positioning the aircraft when flying as wingman. The MP must be totally aware of the status of the aircraft systems.

20.7.4 Training

The primary mission of the TH-57B/C is pilot training. During flight training the SNA will typically perform the duties of the PIC to the maximum extent possible commensurate with flight safety in order to maximize development of decision making skills.

20.7.5 Search and Rescue

The TH-57B/C has no special equipment to conduct search and rescue operations. The PIC must carefully plan and brief any search and rescue missions to make maximum use of the limited TH-57B/C search and rescue capabilities.

20.7.6 External Loads

Careful coordination is necessary to ensure safe external load operations. A special external load brief shall be given, normally by the aircrewman. Care must be taken to coordinate all voice and lost ICS commands.

20.7.7 Confined Area Landings

Careful coordination is necessary to ensure safe confined area landings. A special confined area landing brief shall be given, normally by the aircrewman. Lookout doctrine, especially clearing the aircraft in close quarters, shall be stressed. Care must be taken to coordinate all voice and lost ICS commands.

20.7.8 Overwater and Shipboard Operations

Full coordination of all crewmembers will ensure safe operations over water and aboard ships. The primary responsibility of the FP is to control the aircraft safely. The MP will monitor gauges, particularly engine gauges. The MP duties also include monitoring altitude and airspeed indications. During descents and low-level flight, the MP must advise the FP of unsafe descent conditions. During climbs, especially after takeoff from ships, the MP will monitor instruments for three indications of climb (barometric altimeter, radar altimeter, and VSI/IVSI).

20.7.9 Night Vision Device Operations

Aircraft emergencies occurring while using Night Vision Devices (NVDs) are handled in the same manner as during non-device operations; however, because the use of NVDs facilitates operating at lower altitudes, response time may be reduced. Conversely, while using NVDs, the time required to manipulate cockpit switches may be increased. For these reasons, it is essential that the aircrew thoroughly brief their responsibilities during critical and non-critical emergencies. The removing of the NVDs, though not recommended, and/or the use of the landing light/searchlight during emergencies is at the PIC's discretion.

PART X

NATOPS Evaluation

Chapter 21 — NATOPS Evaluation

CHAPTER 21

NATOPS Evaluation

21.1 CONCEPT

The standard operating procedures prescribed in this manual represent the optimum method of operating TH–57 aircraft. The NATOPS evaluation is intended to evaluate compliance with NATOPS procedures by observing and grading individuals and units. This evaluation is tailored for compatibility with various operational commitments and missions of both Navy and Marine Corps units. The prime objective of the NATOPS evaluation program is to assist the unit commanding officer in improving unit readiness and safety through constructive comment. Maximum benefit from the NATOPS program is achieved only through the active vigorous support of all pilots and flightcrewmembers.

21.2 IMPLEMENTATION

The NATOPS evaluation program shall be carried out in every unit operating naval aircraft. The various categories of flightcrewmembers desiring to attain/retain qualification in the TH–57 shall be evaluated in accordance with OPNAVINST 3710.7 series. Individual and unit NATOPS evaluations will be conducted periodically; however, instructions in, and observation of, adherence to NATOPS procedures must be on a daily basis within each unit to obtain maximum benefits from the program. The NATOPS coordinators, evaluators, and instructors shall administer the program as outlined in OPNAVINST 3710.7 series. Evaluees who receive a grade of Unqualified on a ground or flight evaluation shall be allowed 30 days in which to complete a reevaluation. A maximum of 60 days may elapse between the date the initial ground evaluation was commenced and the date the flight evaluation is satisfactorily completed.

21.3 DEFINITIONS

The following terms, used throughout this chapter, are defined as to their specific meaning within the NATOPS program.

21.3.1 NATOPS Evaluation

A periodic evaluation of individual flightcrewmember standardization consisting of an open–book examination, a closed–book examination, an oral examination, and a flight evaluation.

21.3.2 NATOPS Reevaluation

A partial NATOPS evaluation administered to a flightcrewmember who has been placed in an Unqualified status by receiving an Unqualified grade for any of his ground examinations or the flight evaluation. Only those areas in which an unsatisfactory level was noted need be observed during a reevaluation.

21.3.3 Qualified

That degree of standardization demonstrated by a very reliable flightcrewmember who has a good knowledge of standard operating procedures and a thorough understanding of aircraft capabilities and limitations.

21.3.4 Conditionally Qualified

That degree of standardization demonstrated by a flightcrewmember who meets the minimum acceptable standards. He is considered safe enough to fly as a pilot in command or to perform normal duties without supervision but more practice is needed to become qualified.

21.3.5 Unqualified

That degree of standardization demonstrated by a flightcrewmember who fails to meet minimum acceptable criteria. He should receive supervised instruction until he has achieved a grade of Qualified or Conditionally Qualified.

21.3.6 Area

A routine of preflight, flight, or postflight.

21.3.7 Subarea

A performance subdivision within an area that is observed and evaluated during an evaluation flight.

21.3.8 Critical Area/Subarea

Any area or subarea that covers items of significant importance to the overall mission requirements, the marginal performance of which would jeopardize safe conduct of the flight.

21.3.9 Emergency

An aircraft component, system failure, or condition that requires instantaneous recognition, analysis, and proper action.

21.3.10 Malfunction

An aircraft component or system failure or condition that requires recognition and analysis, but which permits more deliberate action than that required for an emergency.

21.4 GROUND EVALUATION

The purpose of the ground evaluation is to measure pilot/crewmember knowledge of appropriate publications and the aircraft. Prior to commencing the flight evaluation, an evaluee must achieve a minimum grade of Qualified on the open–book and closed–book examinations. The oral examination is also part of the ground evaluation but may be conducted as part of the flight evaluation. To ensure a degree of standardization between units, the NATOPS instructors may use the bank of questions contained in this chapter in preparing portions of the written examinations.

21.4.1 Open–Book Examination

The open–book examination may consist of, but shall not be limited to, the questions from the question bank. The number of questions shall not exceed 100 or be less than 50. The maximum time allowed for this examination should not exceed 5 working days.

21.4.2 Closed–Book Examination

Questions for the closed–book examination may include, but shall not be limited to, questions from the question bank. The number of questions on the examination shall not exceed 40 or be less than 20. The maximum time allowed for this examination should not exceed 2 hours. Questions designated critical will be so marked. An incorrect answer to any question in the critical category will result in a grade of Unqualified being assigned to the examinee.

21.4.3 Oral Examination

The questions may be taken from this manual and drawn from the experience of the instructor/evaluator. Such questions should be direct and positive and should in no way be opinionated.

21.4.4 OFT/WST Procedures Evaluation

An OFT may be used to assist in measuring the crewmember's performance in the execution of prescribed operating procedures and his reaction to emergencies and malfunctions. In areas not served by these facilities, this may be done by placing the crewmember in an aircraft and administering appropriate questions.

21.4.5 Grading Instructions

Examination grades shall be computed on a 4.0-point scale and converted to an adjective grade of Qualified or Unqualified.

21.4.5.1 Open-Book Examination

To obtain a grade of Qualified, an evaluee must obtain a minimum score of 3.5.

21.4.5.2 Closed-Book Examination

To obtain a grade of Qualified, an evaluee must obtain a minimum score of 3.3.

21.4.5.3 Oral Examination and OFT Procedure Check (if Conducted)

A grade of Qualified or Unqualified shall be assigned by the instructor/evaluator.

21.5 FLIGHT EVALUATION

The NATOPS flight is intended to measure pilot and crewmember performance with regard to knowledge of, and adherence to, prescribed procedures. The number of flights required to complete the flight evaluation should be kept to a minimum, normally one flight. It may be conducted on any operational or training flight and only those areas observed will be graded. The grade for the flight evaluation and overall NATOPS evaluation shall be determined as outlined in this chapter. A NATOPS flight evaluation worksheet (Figures 21-1 and 21-2) shall be used during the evaluation flight.

21.5.1 Flight Evaluation Grading Criteria

Only those subareas provided or required will be graded. The grades assigned for a subarea shall be determined by comparing the degree of adherence to standard operating procedures with adjectival ratings listed below. Momentary deviations from standard operating procedures should not be considered as unqualifying provided such deviations do not jeopardize flight safety and the evaluee applies prompt corrective action.

21.5.1.1 Qualified

Well-standardized; evaluee demonstrated highly professional knowledge of, and compliance with, NATOPS standards and procedures; momentary deviations from, or minor omissions in, noncritical areas are permitted if prompt and timely remedial action is initiated by the evaluee.

21.5.1.2 Conditionally Qualified

Satisfactorily standardized; one or more significant deviations from NATOPS standards and procedures, but no errors jeopardizing mission accomplishment or flight safety.

21.5.1.3 Unqualified

Not acceptably standardized; evaluee fails to meet minimum standards regarding knowledge of and/or ability to apply NATOPS procedures; one or more significant deviations from NATOPS standards and procedures that could jeopardize mission accomplishment or flight safety.

TH–57B/C NATOPS EVALUATION/INSTRUCTOR WORKSHEET
FOR NAVAL AVIATOR

NAME	GRADE	
ACTIVITY	AIRCRAFT MODEL	POSITION
TOTAL HOURS	HOURS IN MODEL	DATE OF LAST EVAL FLT
EVALUATION INSTRUCTOR	GRADE	
FLIGHT DURATION	A/C BUNO	OVERALL GRADE
DATE OF FLIGHT		LOG BOOK ENTRY

WRITTEN EXAMINATION FORM – PAGE 2
ORAL EXAMINATION FORM – PAGE 3
FLIGHT EQUIPMENT FORM – PAGE 4
FLIGHT EVALUATION REMARKS FORM – PAGE 5-11
FLIGHT EVALUATION SUMMARY FORM – PAGE 12

REMARKS:

STRONG AREAS:
WEAK AREAS:

PAGE 1

FLIGHT EXAMINATION SUMMARY

NOTE: INSERT NUMERICAL SUBSECTION GRADE IN BOXES.

	GRADES
FLIGHT EQUIPMENT	
MISSION PLANNING	
BRIEFING	
PREFLIGHT	
ENGINE START/ENGAGEMENT	
TAXI	
TAKEOFF/TRANSITION	
CLIMB/CRUISE	
APPROACH/LANDING	
AUTOROTATIONS	
EMERGENCY PROCEDURES	
BASIC AIRWORK	
COMMUNICATIONS	
SHUTDOWN/POSTFLIGHT	
HEADWORK	

TOTAL ÷ 15 = FLIGHT EVALUATION GRADE

PAGE 12

Figure 21-1. NATOPS Flight Evaluation Worksheet (Sheet 1 of 6)

INSTRUCTIONS: A COMPLETE DESCRIPTION OF ALL PERFORMANCE DURING THE MISSION IS REQUIRED. ALL IN-FLIGHT NOTES TO BE USED FOR CRITIQUE AND GRADING WILL BE RECORDED ON WORKSHEETS. THE REMARKS SPACE PROVIDED IS NOT TO BE REGARDED AS A LIMIT TO NECESSARY COMMENTS, NOTES, OR REMARKS. DISCREPANCIES WILL BE NOTED AS THEY OCCUR. USE THIS WORKSHEET AS A CRITIQUE OUTLINE.

● DENOTES CRITICAL AREAS/SUBAREAS
# DENOTES OPTIONAL ITEMS

THE NATOPS EVALUATION FLIGHT IS INTENDED TO MEASURE PERFORMANCE WITH REGARD TO KNOWLEDGE OF AND ADHERENCE TO PRESCRIBED PROCEDURES. ANY TENDENCY TO EXTEND THE EVALUATION INTO THE AREAS OF PILOT PROFICIENCY OR WEAPONS READINESS MUST BE AVOIDED.

EXAMINATIONS

EXAMINATIONS	DATE	GRADE
A. OPEN BOOK		
B. CLOSED BOOK		
C. ORAL		
D. FLIGHT EVALUATION		

REMARKS:

PAGE 2

XIII. SHUTDOWN/POSTFLIGHT:

	Q	CQ	U	PTS
#A. NATOPS PROCEDURES				
#B. SHUTDOWN CHECK-LIST				
#C. POSTFLIGHT INSPECTION				
#D. RECORDS COMPLETION				
E. DEBRIEFING				

TOTAL + NUMBER OF GRADED ITEMS = SUBSECTION GRADE [ ]

REMARKS:

XIV. HEADWORK:

Q	CQ	U	PTS

TOTAL = SUBSECTION GRADE [ ]

REMARKS:

PAGE 11

Figure 21-1. NATOPS Flight Evaluation Worksheet (Sheet 2)

ORAL EXAMINATION

QUESTIONS SHOULD BE DIRECT AND POSITIVE AND SHOULD IN NO WAY BE OPINIONATED.

	Q	CQ	U	PTS
A. LIGHT AND HAND SIGNALS				
B. AIRCRAFT SYSTEMS				
1. POWER PLANT				
2. TRANSMISSION				
3. ROTOR/FLIGHT CONTROLS				
4. STABILIZATION				
5. HYDRAULICS				
6. FUEL				
7. ELECTRICAL/LIGHTING				
8. COMMUNICATION/NAVIGATION				
C. OPERATING LIMITATIONS				
D. MALFUNCTION ANALYSIS				
E. NORMAL PROCEDURES				
F. FLIGHT CHARACTERISTICS				
G. EMERGENCY PROCEDURES				
H. PERFORMANCE DATA				

TOTAL + NUMBER OF GRADED ITEMS = SUBSECTION GRADE

REMARKS:

PAGE 3

XI. BASIC AIRWORK:

	Q	CQ	U	PTS
A. POWER CONTROL				
B. ATTITUDE CONTROL				
C. DIRECTIONAL CONTROL				
D. SCAN				

TOTAL + 4 = SUBSECTION GRADE

REMARKS:

XII. COMMUNICATIONS:

	Q	CQ	U	PTS
A. VOICE PROCEDURES				
B. LIGHT/HAND SIGNALS				

TOTAL + 2 = SUBSECTION GRADE

REMARKS:

PAGE 10

Figure 21-1. NATOPS Flight Evaluation Worksheet (Sheet 3)

FLIGHT EQUIPMENT

	Q	CQ	U	PTS
HELMET (INCLUDING REFLECTIVE TAPE)				
FLIGHT SUIT				
FLIGHT BOOTS				
SURVIVAL EQUIPMENT				
FLIGHT GLOVES				
ID TAGS				

TOTAL + NUMBER OF GRADED ITEMS = SUBSECTION GRADE

REMARKS:

PAGE 4

XIII. AUTOROTATION:

	Q	CQ	U	PTS
A. NATOPS PROCEDURES				
•B. RPM CONTROL				
•C. AIRSPEED CONTROL				
•D. RECOVERY				
E. TYPE AUTOROTATION				
(1) POWER RECOVERY				
(2) FULL				

TOTAL + NUMBER OF GRADED ITEMS = SUBSECTION GRADE

REMARKS:

X. EMERGENCY PROCEDURES:

NOTE: THE OVERALL GRADE FOR EMERGENCY PROCEDURES SHALL BE THE LOWEST GRADE WHILE UNDERGOING EVALUATION IN ANY ONE EMERGENCY.

	Q	CQ	U	PTS
A. ENGINE MALFUNCTIONS				
B. ROTOR OVERSPEED				
C. ENGINE FAILURES				
D. TAIL ROTOR EMERGENCIES				
E. ENGINE FIRE				
F. ELECTRICAL FIRE				
G. FUSELAGE FIRE				
H. MAST BUMPING				
I. ELECTRICAL EMERGENCIES				
J. FUEL RELATED EMERGENCIES				
K. HYDRAULIC EMERGENCIES				
L. OTHER				

TOTAL + NUMBER OF GRADED ITEMS = SUBSECTION GRADE

REMARKS:

PAGE 9

Figure 21-1. NATOPS Flight Evaluation Worksheet (Sheet 4)

PILOT FLIGHT EVALUATION

I. MISSION PLANNING:

	Q	CQ	U	PTS
A. FLIGHT PLAN				
B. REQUIRED PUBLICATIONS				
C. WEATHER				
D. NATOPS FLIGHT MANUAL/PCL				

TOTAL ÷ 4 = SUBSECTION GRADE

REMARKS:

II. BRIEFING:

	Q	CQ	U	PTS
A. FLIGHT CREW BRIEF				
B. COPILOT BRIEF				

TOTAL ÷ 2 = SUBSECTION GRADE

REMARKS:

PAGE 5

VII. CLIMB/CRUISE:

	Q	CQ	U	PTS
A. NATOPS PROCEDURE				
B. FUEL CHECKS				

TOTAL ÷ 2 = SUBSECTION GRADE

REMARKS:

VIII. APPROACH/LANDING:

	Q	CQ	U	PTS
A. NATOPS PROCEDURES				
B. TYPE APPROACH				
•(1) NORMAL				
(2) STEEP				
C. TYPE LANDING				
•(1) VERTICAL				
•(2) SLIDING				
(3) NO HOVER				

TOTAL ÷ NUMBER OF GRADED ITEMS = SUBSECTION GRADE

REMARKS:

PAGE 8

Figure 21-1. NATOPS Flight Evaluation Worksheet (Sheet 5)

III. PREFLIGHT:

	Q	CQ	U	PTS
●A. YELLOW SHEET/AIRCRAFT RECORDS				
●B. WEIGHT AND BALANCE				
#C. FUEL SAMPLE				
●D. PREFLIGHT INSPECTION				

TOTAL + NUMBER OF GRADED ITEMS = SUBSECTION GRADE

REMARKS:

IV. ENGINE START/ENGAGEMENT:

	Q	CQ	U	PTS
#A. NATOPS PROCEDURES				
#B. START/ENGAGEMENT CHECKLIST				
#C. SYSTEM CHECKS				

TOTAL + NUMBER OF GRADED ITEMS = SUBSECTION GRADE

REMARKS:

PAGE 6

V. TAXI:

	Q	CQ	U	PTS
A. TAXI CONTROL				
B. TAXIING/INSTRUMENT CHECKLIST				

TOTAL + NUMBER OF GRADED ITEMS = SUBSECTION GRADE

REMARKS:

VI. TAKEOFF/TRANSISTION:

	Q	CQ	U	PTS
A. NATOPS PROCEDURES				
●B. OBSERVE POWER REQUIRED FOR HOVER				
C. TYPE TAKEOFF				
●(1) VERTICAL				
(2) NO HOVER				
(3) MAXIMUM LOAD				

TOTAL + NUMBER OF GRADED ITEMS = SUBSECTION GRADE

REMARKS:

PAGE 7

Figure 21-1. NATOPS Flight Evaluation Worksheet (Sheet 6)

NATOPS EVALUATION WORKSHEET
FOR NAVAL AIRCREWMAN

NAME	GRADE	
ACTIVITY	AIRCRAFT MODEL	POSITION
TOTAL HOURS	HOURS IN MODEL	DATE OF LAST EVAL FLT
EVALUATION INSTRUCTOR	GRADE	
EVALUATION INSTRUCTOR	GRADE	
FLIGHT DURATION	A/C BUNO	OVERALL GRADE
DATE OF FLIGHT		LOG BOOK ENTRY

REMARKS:

PAGE 1

INSTRUCTIONS: A COMPLETE DESCRIPTION OF ALL PERFORMANCE DURING THE MISSION IS REQUIRED. ALL IN–FLIGHT NOTES TO BE USED FOR CRITIQUE AND GRADING WILL BE RECORDED ON WORKSHEETS. THE REMARKS SPACE PROVIDED IS NOT TO BE REGARDED AS A LIMIT TO NECESSARY COMMENTS, NOTES, OR REMARKS. DISCREPANCIES WILL BE NOTED AS THEY OCCUR. USE THIS WORKSHEET AS A CRITIQUE OUTLINE.

● DENOTES CRITICAL AREAS/SUBAREAS
# DENOTES OPTIONAL ITEMS

THE NATOPS EVALUATION FLIGHT IS INTENDED TO MEASURE PERFORMANCE WITH REGARD TO KNOWLEDGE OF AND ADHERENCE TO PRESCRIBED PROCEDURES. ANY TENDENCY TO EXTEND THE EVALUATION INTO THE AREAS OF PILOT PROFICIENCY OR WEAPONS READINESS MUST BE AVOIDED.

EXAMINATIONS

EXAMINATIONS	DATE	GRADE
A. OPEN BOOK		
B. CLOSED BOOK		
C. ORAL		
D. FLIGHT EVALUATION		

REMARKS:

PAGE 2

Figure 21-2. NATOPS Evaluation Worksheet for Naval Aircrewman (Sheet 1 of 3)

GROUND/ORAL EVALUATION					
1. SYSTEMS	AREA GRADE				REMARKS:
SUB-AREA	Q	CQ	UQ	POINTS	
a. UTILITY					
OVERALL GRADE	TOTAL POINTS				
2. FLIGHT PREPARATION	AREA GRADE				
SUB-AREA	Q	CQ	UQ	POINTS	
a. CREW BRIEF					
b. PERSONAL FLT. EQUIPMENT					
c. AIRCRAFT DISCREPANCY BOOK					
OVERALL GRADE	TOTAL POINTS				
3. PREFLIGHT	AREA GRADE				REMARKS:
a. AIRCRAFT INSPECTION					
b. CABIN PREPARATION					
c. CARGO HOOK CHECK					
OVERALL GRADE	TOTAL POINTS				

Figure 21-2. NATOPS Evaluation Worksheet for Naval Aircrewman (Sheet 2)

FLIGHT EVALUATION					
4. IN FLIGHT	AREA GRADE				
SUB-AREA	Q	CQ	UQ	POINTS	
a. LOCKOUT DOCTRINE					
b. EXTERNAL LOADS					
c. CONFINED AREA LANDINGS					
d. CREW COORDINATION					
e. ICS PROCEDURES					
OVERALL GRADE	TOTAL POINTS				
5. EMERGENCIES	AREA GRADE				REMARKS:
SUB-AREA	Q	CQ	UQ	POINTS	
a. CARGO HOOK FAILURE					
b. EXTERNAL LOAD ICS FAILURE					
c. CONFINED AREA LANDING ICS FAILURE					
OVERALL GRADE	TOTAL POINTS				
6. POSTFLIGHT	AREA GRADE				
SUB-AREA	Q	CQ	UQ	POINTS	
a. AIRCRAFT INSPECTION					
b. SECURING AIRCRAFT					
OVERALL GRADE	TOTAL POINTS				

Figure 21-2. NATOPS Evaluation Worksheet for Naval Aircrewman (Sheet 3)

21.5.2 Flight Evaluation Grade Determination

The following procedure shall be used in determining the flight evaluation grade. A grade of Unqualified in any critical area/subarea will result in an overall grade of Unqualified for the flight; otherwise, flight evaluation (or area) grades shall be determined by assigning the following numerical equivalents to the adjective grade for each subarea. Only the numerals 0, 2, or 4 will be assigned in subareas. No interpolation is allowed.

Unqualified — 0.0.

Conditionally Qualified — 2.0.

Qualified — 4.0.

To determine the numerical grade for each area and the overall grade for the flight, add all the points assigned to the subareas and divide this sum by the number of subareas graded. The adjective grade shall then be determined on the basis of the following scale:

0.0 to 2.19 — Unqualified.

2.2 to 2.99 — Conditionally Qualified.

3.0 to 4.0 — Qualified.

Example (add subarea numerical equivalents):

$$\frac{4 + 2 + 4 + 2 + 4}{5} = \frac{16}{5} = 3.20 \text{ Qualified}$$

21.6 FINAL GRADE DETERMINATION

The final NATOPS evaluation grade shall be the same as the grade assigned to the flight evaluation. An evaluee who receives an Unqualified on any ground examination or the flight evaluation shall be placed in an Unqualified status until he achieves a grade of Conditionally Qualified or Qualified on a reevaluation.

21.7 RECORDS AND REPORTS

A NATOPS evaluation report shall be completed for each evaluation and forwarded to the evaluee's commanding officer.

This report shall be filed in the individual flight training record and retained therein for 18 months. In addition, an entry shall be made in the pilot/NFO flight logbook under Qualifications and Achievements as shown in Figure 21-3.

In the case of enlisted crewmembers, an entry shall be made in the Administrative Remarks of his personnel record upon satisfactory completion of the NATOPS evaluation as follows:

(Date) Completed a NATOPS evaluation in (aircraft designation) as flightcrew position with an overall grade of (Qualified or Conditionally Qualified). (See Figure 21-3.)

QUALIFICATION			DATE	SIGNATURE
NATOPS EVAL	(Aircraft Model)	(Crew Position)	(DATE)	(Authenticating Signature) (Unit that Administered Eval)

Figure 21-3. NATOPS Evaluation Sheet

21.7.1 NATOPS Evaluation Question Bank

The following bank of questions is intended to assist the NATOPS instructor/evaluator in the preparation of ground examinations and to provide an abbreviated study guide. The questions from the bank should be combined with locally originated questions as well as questions obtained from the model manager in the preparation of ground examination.

21.7.2 NATOPS Evaluation Forms

In addition to the NATOPS evaluation report(s), NATOPS flight evaluation worksheet(s) and the aircrew evaluation form are provided for use by the evaluator/instructor during the evaluation flight. All of the flight areas and subareas are listed on the worksheet with space allowed for related notes.

21.8 QUESTION BANK

1. The NATOPS manual is issued by the authority of the _____ ___ _____ _____. It is your responsibility to have a _____ _____ ___ ___ _____.
2. _____ and _____ _____have been used only when application of a procedure is optional.
3. The primary purpose of the TH–57B is helicopter_____ training and basic _____ _____ _____.
4. The tailboom is a _____ _____ _____, providing maximum _____–___ _____ _____ and _____ .
5. The helicopter is powered by a _____–_____ engine that weighs _____ pounds and is capable of developing _____ shp, but is limited to _____ shp because of _____ _____ limitations.
6. Approximately _____ percent of the air going to the _____ _____ is used for cooling.
7. The gas–producer drive train powers the:

   a. _____

   b. _____

   c. _____

   d. _____

   e. _____

   f. _____
8. The free–power turbine gear train drives the:

   a. _____

   b. _____

   c. _____

   d. _____
9. The engine anti–icing will remain in the _____ _____ _____ in the event of an electrical failure.
10. The _____ _____switch is used to preselect a power turbine speed (N_f) in the _____to _____ percent rpm range.
11. Two _____ cans are located in the line between the ____ _____ and ____ _____ _____to eliminate transient air surges in governor reset pressure.
12. The engine lubricating system is a circulating _____–_____ with an _____ _____ _____and _____ _____.
13. Two chip detector elements, the _____ _____ _____ _____ and the _____ _____ _____, are located on the _____ _____ section of the engine and illuminate the _____caution light.

14. The oil cooling fan provides cooling air for the _____ _____ _____, the _____ _____ _____, and _____ _____.

15. Each rotor blade is twisted _____, having more pitch at the _____ than at the _____.

16. _____ of preconing are built into the main rotor hub and blade assembly to relieve _____ _____ at the blade root.

17. The tail rotor driveshaft consists of _____ _____connected by couplings which provide for driveshaft _____and _____.

18. The rotor brake assembly is mounted to the _____ _____ of the_____ _____. Normal operation is indicated with a constant pressure of _____ to _____ psi.

19. A _____ _____ _____aligns the transmission and isolates vibrations. A _____ is mounted beneath the transmission; rivets secure the _____–_____ _____ to the transmission deck.

20. The tail rotor gearbox contains _____–_____ of a _____ of oil and is _____ lubricated.

21. The fuel pump operates at _____ minimum, _____ maximum.

22. In the TH–57B, the ___ _____ ____ powers flight and navigational equipment and receives power from the ____ _____. In the event of a main generator failure, the _____ will power the bus.

23. Name the four functions of the reverse current relay:

    a. _____

    b. _____

    c. _____

    d. _____

24. The standby battery provides emergency power to the _____ _____ _____ only.

25. The standby generator provides an alternate source of power to the _____ ____ _____ in the event of a _____ _____ _____ .

26. When external power is required for starting, the engine requires _____ volts dc at _____ amps.

27. Normal hydraulic pressure at 100-percent N_r is_____ psi. The caution light will illuminate if the pressure drops below _____ psi.

28. The hydraulic system on-off switch controls a solenoid valve called a _____ - _____ valve; that is _____ _____ to the_____ or _____ position. Should a(n) _____ occur, this valve would automatically _____.

29. The pedal adjusters should not be set _____ _____ as the pedal force trim switch will _____ and the AFCS ____ axis (TH–57C).

30. At speeds of approximately _____ _____ and above, enough lift is generated by the _____ _____ to require a slight amount of _____ pedal.

31. The tail skid is stressed for loads of ____ pounds downward or ____ pounds upward.

32. Altimeter error with current barometric pressure set should not exceed _____ feet from known _____ _____.

33. Excessive use of the landing light (____ minutes or more during periods of prolonged _____ or _____) may cause overheating with a resultant fire hazard.

34. The searchlight is adjustable to _____ of extension. From 0 to 60 extension, the light will rotate _____ left to right. From 60 to 120 extension, the light will rotate _____.

35. Use of the _____ _____ reduces the air available to defog the windscreen.

36. During pressure refueling, necessary _____ and _____ _____ may be on.

37. The engine holds _____ U.S. pints and uses primarily _____ as its standard oil.

38. Maximum engine oil pressure is _____ psi except for temporary conditions up to ____ psi maximum immediately following a _____–_____ _____.

39. With main generator on, the standby generator loadmeter should indicate ____ percent load or _____.

40. With a density altitude of 1,500, maximum sideward airspeed is _____ and maximum rearward airspeed is _____.

41. Climbs and descents during flight in IMC conditions should not exceed _____ feet/minute.

42. List the equipment needed to enter instrument meteorological conditions in the TH–57C:

    a. _____

    b. _____

    c. _____

    d. _____

    e. _____

    f. _____

    g. _____

    h. _____

    i. _____

    j. _____

    k. _____

43. IFR operations are not permitted with any _____ _____ or with _____ _____.

44. Engine failures at high angles of bank may cause aircraft _____ _____ _____.

45. List the equipment required for night flight.

    a. _____

    b. _____

    c. _____

    d. _____

    e. _____

46. The effect of humidity on gas turbine engine is _____; however, since humidity does affect air density, a noticeable effect upon _____ _____ _____ will occur.

47. Wind affects helicopter performance by producing _____ _____ .

48. The maximum load for the baggage compartment cannot exceed _____ pounds.

49. If the STBY BATT voltage is less than _____ volts, aircraft is down for flight in _____.

50. The two major steps to be taken prior to acceptance of the helicopter are a _____ _____ of the recent _____ _____and a thorough _____ _____ . At a minimum, the discrepancies from the last __ flights shall be made available to the pilot for his examination in accordance with OPNAVINST 4790.2 series.

51. At a minimum, discrepancies from the last ____ flights must be available in the _____ _____ _____ (ADB) for the pilot's perusal prior to each flight.

52. When rotating the blades clockwise, the blades should be turned from the _____. If unusual resistance is felt, do not force the rotation. Doing so may damage the _____ _____.

53. If performing battery start, check minimum ____ Vdc.

54. If battery voltage stabilizes below _____ volts, a _____ _____ is imminent; secure _____ and utilize _____ for subsequent starts.

55. When performing battery (or GPU with battery on) starts (TH–57C), ____ _____ open the twist grip if the _____ _____ light is _____ _____.

56. Abort start if _____ have not begun to turn by _____ N_g or if positive transmission indication is not received by _____ N_r.

57. The stab function should not be left engaged during prolonged periods while the aircraft is _____ _____ _____. This may cause the servo to _____.

58. While hot refueling, monitor _____ and make no transmissions except ____ ____ _____ when the fuel nozzle is_____ to _____.

59. Dynamic rollover is a phenomenon peculiar to helicopters and primarily to _____–_____/ _____ _____ _____. It is an accelerated roll about a _____–_____ _____.

60. Low–frequency vibrations, ____ _____ _____ and _____ _____ _____, are originated by the _____ _____.

61. A precautionary landing is defined as a landing when further flight is _____, but _____.

62. The best glide airspeed is _____ KIAS. Do not exceed _____KIAS in sustained autorotation.

63. In a normal autorotation, ____ and ____ may be matched together between _____ to _____ percent steady state.

64. In the TH–57C, time of operation of essential No. 2 bus on battery power is approximately ___ minutes with and an ___ percent charged battery.

65. Failure of N_g tachometer generator is usually accompanied by actuation of the _____ _____ _____ _____and _____.

66. A sudden loss of oil pressure in cold weather, other than a drop caused by relief valve opening, is usually due to a _____ _____ _____.

67. During instrument takeoff, climbing turns should be limited to a maximum of ___angle of bank.

68. When landing in loose or powdery snow, if visual ground reference is lost, the pilot should _____ .

69. Whenever possible, avoid starting the engine on glare ice to avoid the effect of _____when increasing rpm.

70. If icing conditions are encountered during flight, effort should be made to _____the _____ _____immediately.

71. While taxiing in loose or dry snow, a _____ _____ _____ altitude is recommended to prevent _____–_____.

72. If pilot and copilot key their mikes at the same time, the _____ mike will override the _____ mike.

73. The _____ altitude encoder in the transponder system provides altitude identification of the transponder in _____ feet increments from _____ to _____feet.

74. For the ADF (KR–87), the system operating range is _____to _____ miles average, depending on _____ _____and _____ _____ _____.

75. If a ____ ___ _____ message is displayed on the KLN–900 at or after _____ passage, abandon the approach and advise _____ .

76. Localized intercepts within _____of the localizer course should be avoided because of _____ _____ _____.

77. The observer _____ be familiar with ICS operations and shall be briefed on _____ _____ and _____ _____ _____.

78. The TH–57B/C has no special equipment to conduct _____ and _____ operations.

79. Flight personnel must advise all other flight personnel of any _____ ____ _____ problem. This is the _____ step in crew resource management during an emergency.

80. The autorotational glide ratio is _____ at 50 KIAS and the minimum rate of descent is _____ fpm. The glide ratio at 72 KIAS is _____ with a rate of descent of _____ fpm.

PART XI

Performance Data

Chapter 22 — Performance Data Introduction

Chapter 23 — Standard Data

Chapter 24 — Takeoff

Chapter 25 — Climb

Chapter 26 — Cruise

Chapter 27 — Endurance

Chapter 28 — Emergency Operation

Chapter 29 — Special Charts

CHAPTER 22

Performance Data Introduction

22.1 PURPOSE

The purpose of this Part is to provide the best available performance data for the TH–57 helicopter. Regular use of this information will enable you to receive maximum safe utilization from the helicopter. Although maximum performance is not always required, regular use of this chapter is recommended for the following reasons: Knowledge of your performance margin will allow you to make better decisions when unexpected conditions or alternate missions are encountered; situations requiring maximum performance will readily be recognized; familiarity with the data will allow performance to be computed more easily and quickly; and experience will be gained in accurately estimating the effects of variables for which data are not presented.

Note

The information provided in this chapter is primarily intended for mission planning and is most useful when planning operations in unfamiliar areas or at extreme conditions. The data may also be used in flight to establish unit or area standing operating procedures and to inform ground commanders of performance/risk tradeoffs.

22.2 GENERAL

The data presented cover the maximum range of conditions and performance that can reasonably be expected. In each area of performance, the effects of altitude, temperature, gross weight, and other parameters relating to that phase of flight are presented. In addition to the presented data, your judgment and experience will be necessary to obtain accurately performance under a given set of circumstances. The conditions for the data are listed under the title of each chart. The effects of different conditions are discussed in the text accompanying each phase of performance. Where practical, data are presented at conservative conditions; however, no general conservatism has been applied. All performance data presented are within the applicable limits of the aircraft.

22.3 USE OF CHARTS

The first page of each section describes the chart(s) and explains their uses. Chart codes are used as follows: Hash marks are used for limit lines ⁄ ⁄ ⁄. A shaded area is used for precautionary or time–limited operation ▬. The primary use of each chart is given in an example and a guideline is provided to help you follow the route through the chart. The use of a straight edge (ruler or page edge) and a hard fine–point pencil is recommended to avoid cumulative errors. Most charts provide a standard pattern for use as follows: enter first variable on top left scale, move right to the second variable, reflect down at right angles to the third variable, reflect left at right angles to the fourth variable, reflect down, etc., until the final variable is read out at the final scale. In addition to the primary use, other uses of each chart are explained in the text accompanying each set of performance charts.

Note

An example of an auxiliary use of the charts referenced above is as follows: Although the hover chart is primarily arranged to find torque required to hover by entering torque available as torque required, maximum skid height for hover can also be found. In general, any single variable can be found if all others are known. Also, the tradeoffs between two variables can be found. For example, at a given density altitude and pressure altitude, you can find the maximum gross–weight capability as free air temperature changes.

The primary advantage of the helicopter over other aircraft is the capability to hover and take off and land vertically (zero airspeed flight). To calculate more rapidly the performance tradeoffs in hover mode, hover ceiling charts have been included.

22.4 DATA BASIS

The type of data used is indicated at the bottom of each performance chart under DATA BASIS. The applicable report and date of the data are also given. The data provided generally are based on one of the following four categories:

22.4.1 Flight Test Data

Data obtained by flight test of the aircraft by experienced flight test personnel at precise conditions using sensitive calibrated instruments.

22.4.2 Derived from Flight Test

Flight test data obtained on a similar, rather than the same, aircraft and series. Generally small corrections will have been made.

22.4.3 Calculated Data

Data based on tests, but not on flight test of the complete aircraft.

22.4.4 Estimated Data

Data based on estimates using aerodynamic theory or other means, but not verified by flight test.

22.5 SPECIFIC CONDITIONS

The data presented are accurate only for specific conditions listed under the title of each chart. Variables for which data are not presented, but which may affect that phase of performance, are discussed in the text. Where data are available or reasonable estimates can be made, the amount that each variable affects performance will be given.

22.6 GENERAL CONDITIONS

In addition to the specific conditions, the following general conditions are applicable to the performance data:

22.6.1 Rigging

All airframe and engine controls are assumed to be rigged within allowable tolerances.

22.6.2 Pilot Technique

Normal pilot technique is assumed. Control movements should be smooth and continuous.

22.6.3 Aircraft Variation

Variations in performance between individual aircraft are known to exist; however, they are considered to be small and cannot be accounted for individually.

22.6.4 Instrument Variation

The data shown in the performance charts do not account for instrument inaccuracies or malfunctions.

22.7 PERFORMANCE DISCREPANCIES

Regular use of this chapter will allow you to monitor instruments and other aircraft systems for malfunction by comparing actual performance with planned performance. Knowledge will also be gained concerning the effects of variables for which data are not provided, thereby increasing the accuracy of performance predictions.

CHAPTER 23

Standard Data

23.1 AIRSPEED CALIBRATION CHART

The airspeed calibration chart (Figure 23-1) converts calibrated airspeed to indicated airspeed and vice versa. Calibrated airspeed (KCAS) is indicated airspeed (KIAS) as read from the airspeed indicator corrected for instrument error, plus the installation correction.

23.2 PRESSURE ALTITUDE

Pressure altitude is the altitude indicated on the altimeter when the barometric scale is set on 29.92. It is the height above the standard datum plane at which the air pressure is equal to 29.92 inches of mercury.

23.3 DENSITY ALTITUDE CHART

Density altitude is an expression of the density of the air in terms of height above sea level; hence, the less dense the air, the higher the density altitude. For standard conditions of temperature and pressure, density altitude is the same as pressure altitude. As temperature increases above standard for any altitude, the density altitude will also increase to values higher than pressure altitude. Figure 23-2 expresses density altitude as a function of pressure altitude and temperature.

The chart also includes the inverse of the square root of density ratio ($1/\sqrt{\sigma}$), which is used to calculate TAS by the relation:

$$TAS = CAS \times 1/\sqrt{\sigma}$$

23.4 TEMPERATURE CONVERSION CHART

The temperature conversion chart (Figure 23-3) provides a means of converting temperature in degrees Celsius to degrees Fahrenheit and vice versa.

23.5 SHAFT HORSEPOWER VS. TORQUE CHART

The shaft horsepower vs. torque chart (Figure 23-4) provides a means of converting torque to shaft horsepower, and vice versa, for 100 percent rotor rpm.

23.6 TORQUE AVAILABLE CHARTS

Both pressure altitude and FAT affect engine power production. Figures 23-5 and 23-6 show power available data at 5-minute power and maximum continuous power ratings in terms of the allowable torque as recorded by the torquemeter (percent Q).

Note that the power output capability of the 250-C20J engine can exceed the transmission structural limit (85 percent Q) under certain conditions.

Figure 23-5 is applicable for maximum power 5-minute operation at 100 percent N_f rpm. Figure 23-6 is applicable for maximum continuous power at 100 percent N_f rpm. Prolonged IGE hover may increase engine inlet temperature as much as 10 °C; therefore, a higher FAT must be used to correct for the increase under this condition.

23.7 FUEL FLOW CHART

The fuel flow for this aircraft is presented in Figure 23-7. Sheet 1, fuel flow versus torque, shows fuel flow in gallons-per-hour vs. torquemeter percent (percent Q) for pressure altitude from sea level to 20,000 feet and for 0 °C FAT. Sheet 2 gives fuel flow at engine idle and at flat pitch with 100 percent rpm.

The primary use of the charts is illustrated by the examples to determine fuel flow. It is necessary to know the condition or torquemeter percent and the FAT as well as the pressure altitude. Fuel flow will increase approximately 2 percent with the reverse flow inlet (snow baffles) installed. Also, a range or endurance penalty of 2 percent should be accounted for when working cruise chart data. A fairly accurate rule of thumb to correct fuel flow for temperatures other than 0 °C FAT is to increase (decrease) fuel flow 1 percent for each 10 °C increase (decrease) in FAT. These charts are based on JP-4 or JP-5 fuel and 100 percent rpm.

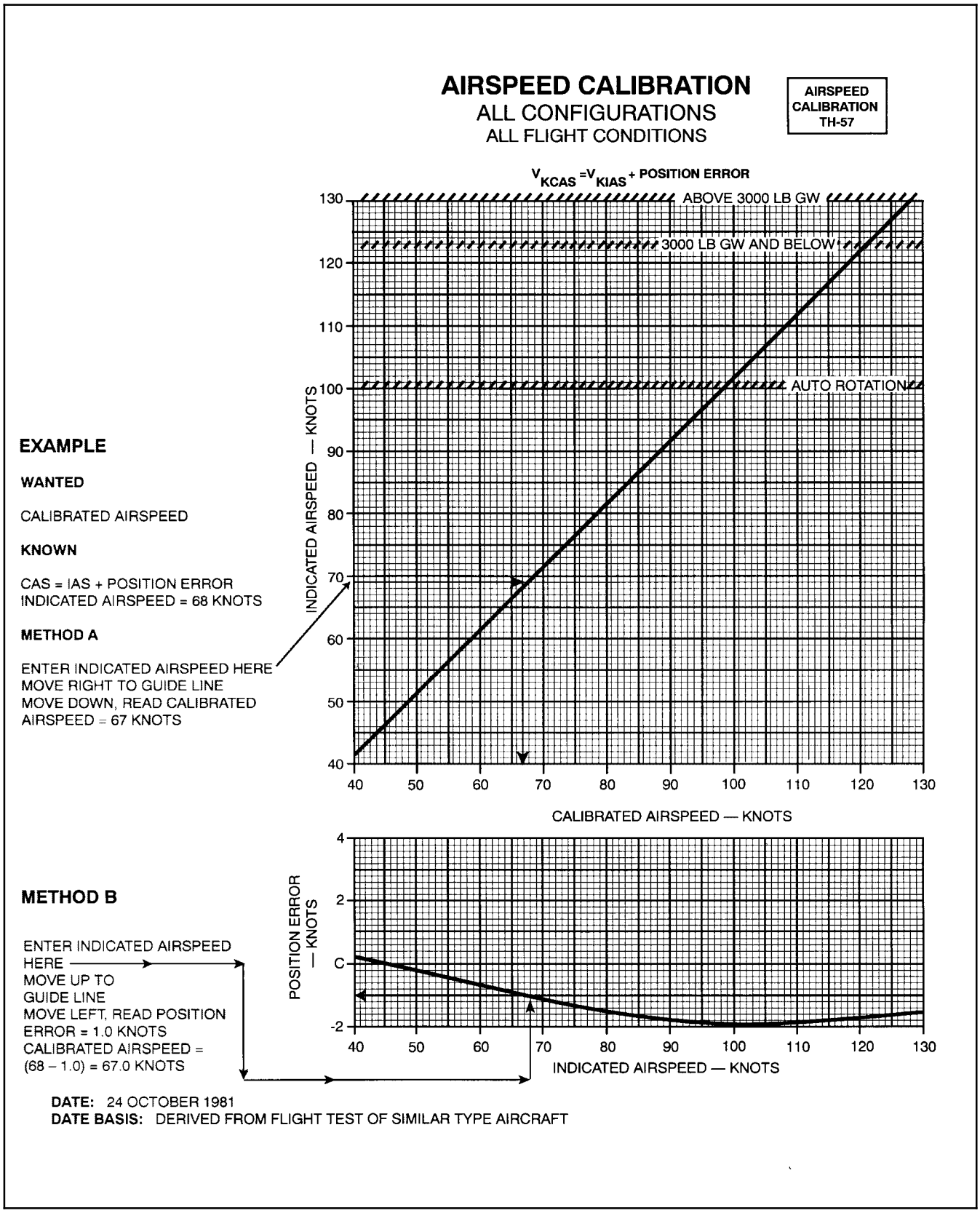

Figure 23-1. Airspeed Calibration Chart

EXAMPLE

WANTED

DENSITY ALTITUDE,
$1/\sqrt{\sigma}$ AND TRUE AIRSPEED
FOR 115 KCAS

KNOWN

FAT = +7.1°C (STANDARD DAY)
PRESSURE ALTITUDE = 4000 FEET
KTAS = KCAS x $1/\sqrt{\sigma}$

METHOD

ENTER FAT SCALE HERE → ❶
MOVE UP TO PRESSURE ALTITUDE
a) MOVE LEFT, READ DENSITY ALTITUDE = 4000 FEET
b) MOVE RIGHT, READ $1/\sqrt{\sigma}$ = 1.061
MULTIPLY KCAS BY $1/\sqrt{\sigma}$ TO OBTAIN TRUE AIRSPEED
(115 x 1.016) = 122 KTAS

Figure 23-2. Density Altitude/Temperature Conversion Chart (Sheet 1 of 2)

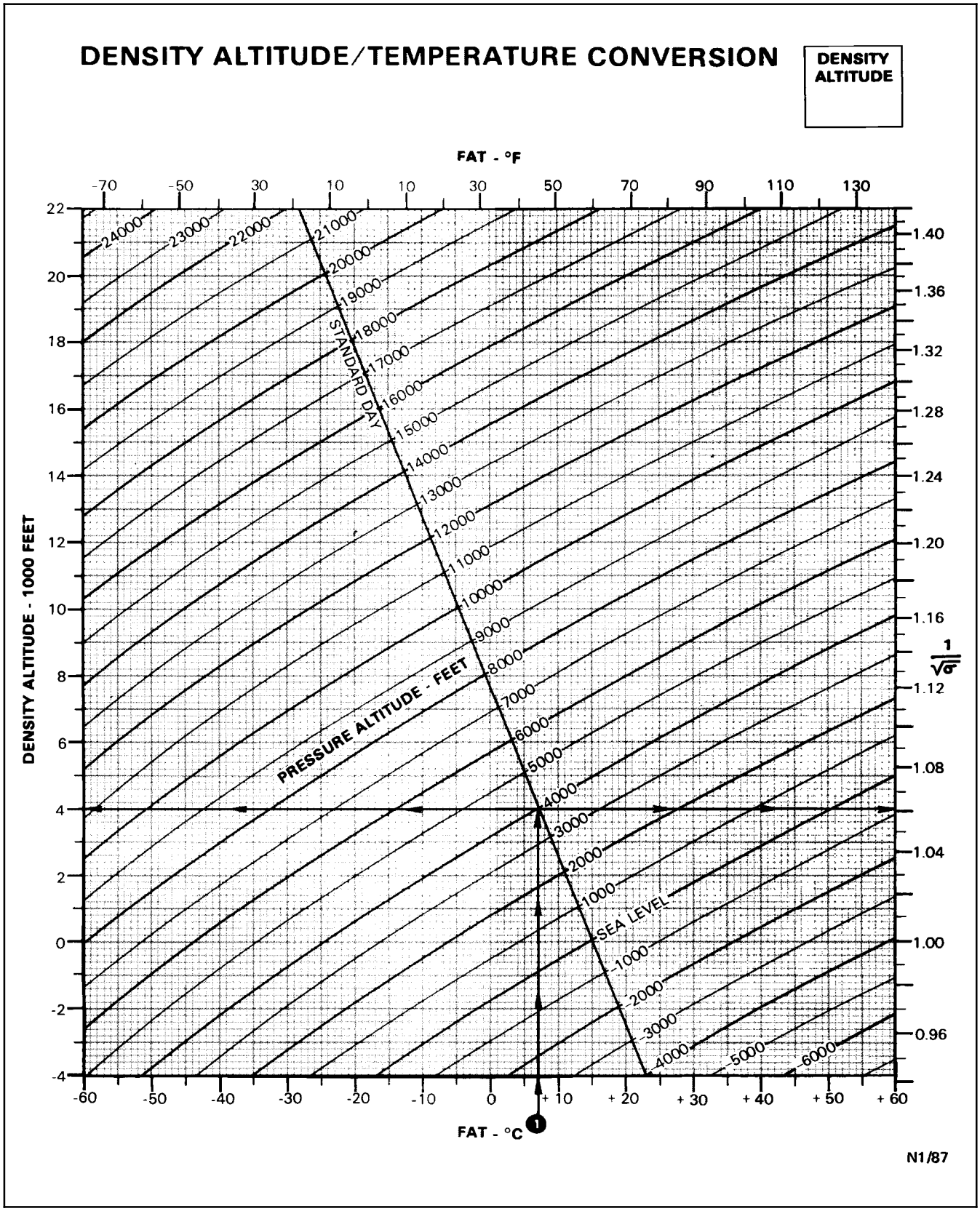

Figure 23-2. Density Altitude/Temperature Conversion Chart (Sheet 2)

TEMPERATURE CONVERSION CHART

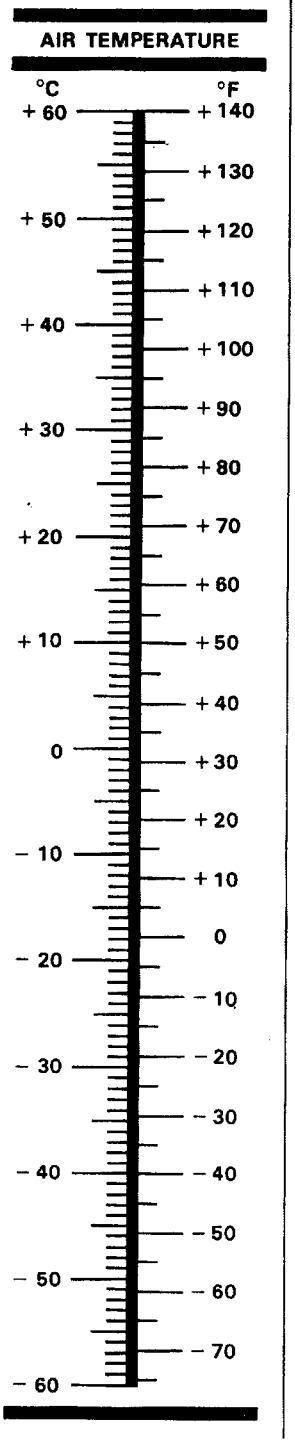

CELSIUS	FAHRENHEIT
-50C°	-58F°
-45C°	-49F°
-40C°	-40F°
-35C°	-31F°
-30C°	-22F°
-25C°	-13F°
-20C°	-4F°
-15C°	+5F°
-10C°	+14F°
-5C°	+23F°
0C°	+32F°
+5C°	+41F°
+10C°	+50F°
+15C°	+59F°
+20C°	+68F°
+25C°	+77F°
+30C°	+86F°
+35C°	+95F°
+40C°	+104F°
+45C°	+113F°
+50C°	+122F°

Figure 23-3. Temperature Conversion Chart

SHAFT HORSEPOWER VS TORQUE

SHP VS TORQUE TH-57

100% ENGINE RPM

EXAMPLE:

WANTED
SHAFT HORSEPOWER EQUIVALENT
KNOWN
79% TORQUE
METHOD
ENTER TORQUE SCALE HERE ●
MOVE UP TO BASELINE
MOVE LEFT AND READ 250 SHAFT HORSEPOWER

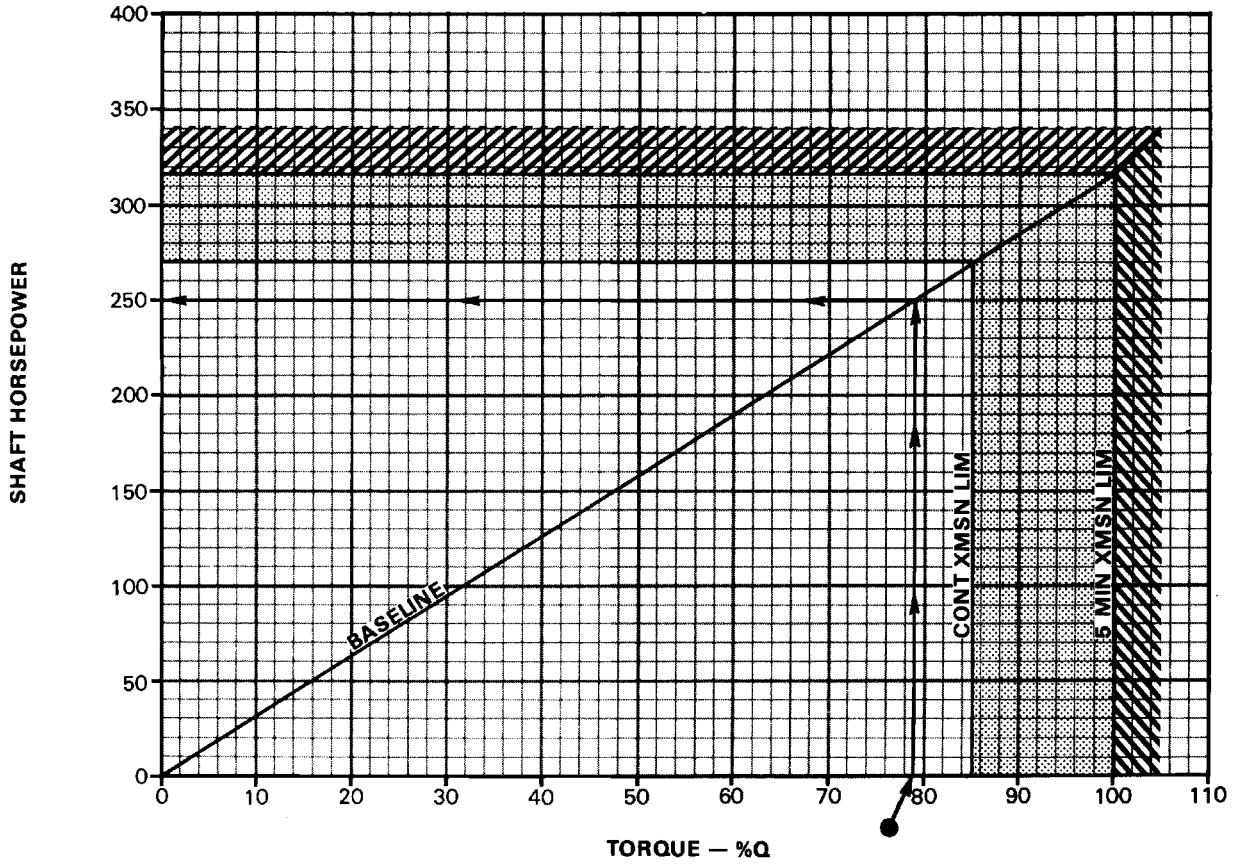

DATA BASIS: DERIVED FROM FLIGHT TEST OF SIMILAR AIRCRAFT
DATE: 24 OCT 1981

N1/87

Figure 23-4. Shaft Horsepower vs. Torque

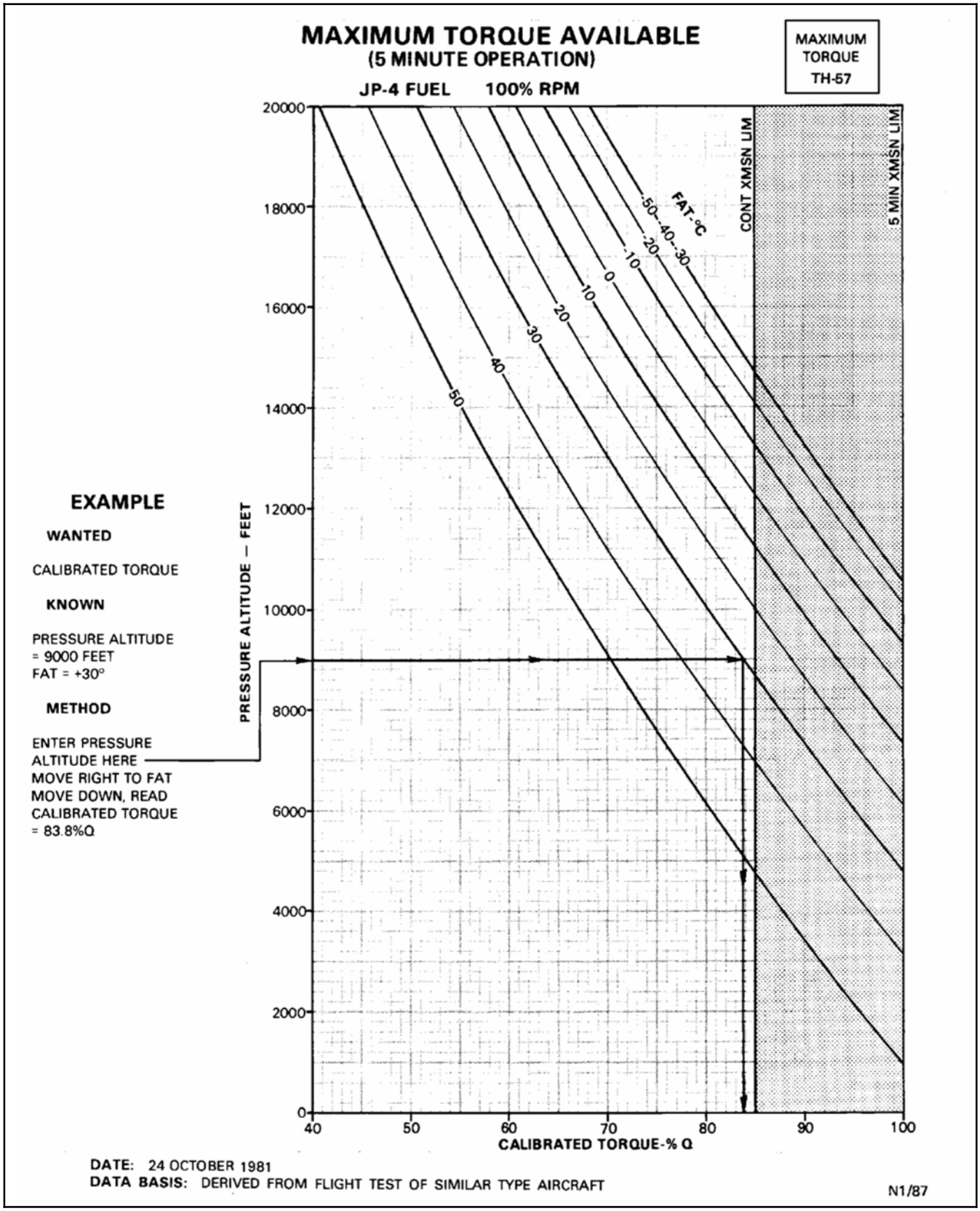

Figure 23-5. Maximum Torque Available (5-Minute Operation) Chart

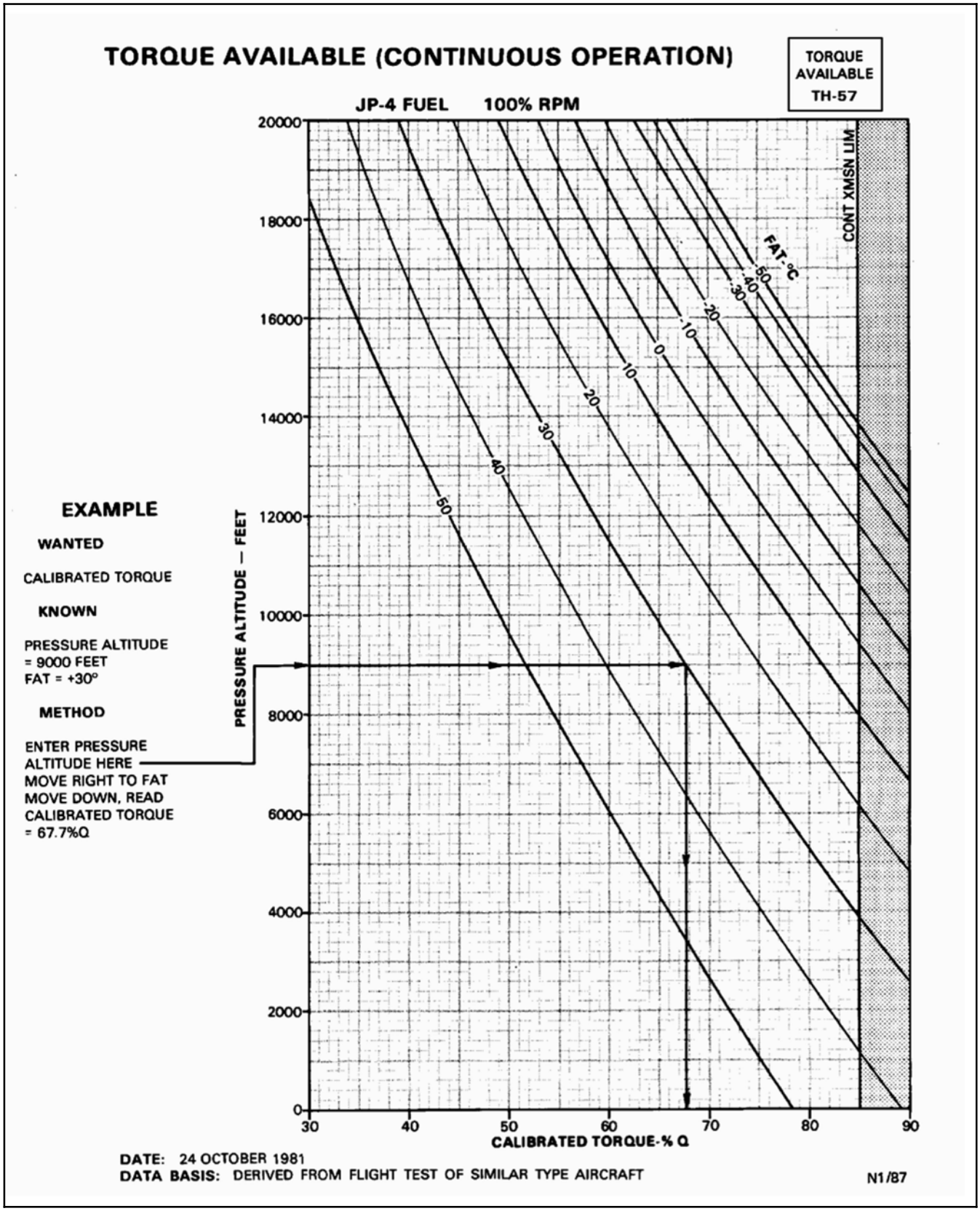

Figure 23-6. Torque Available (Continuous Operation) Chart

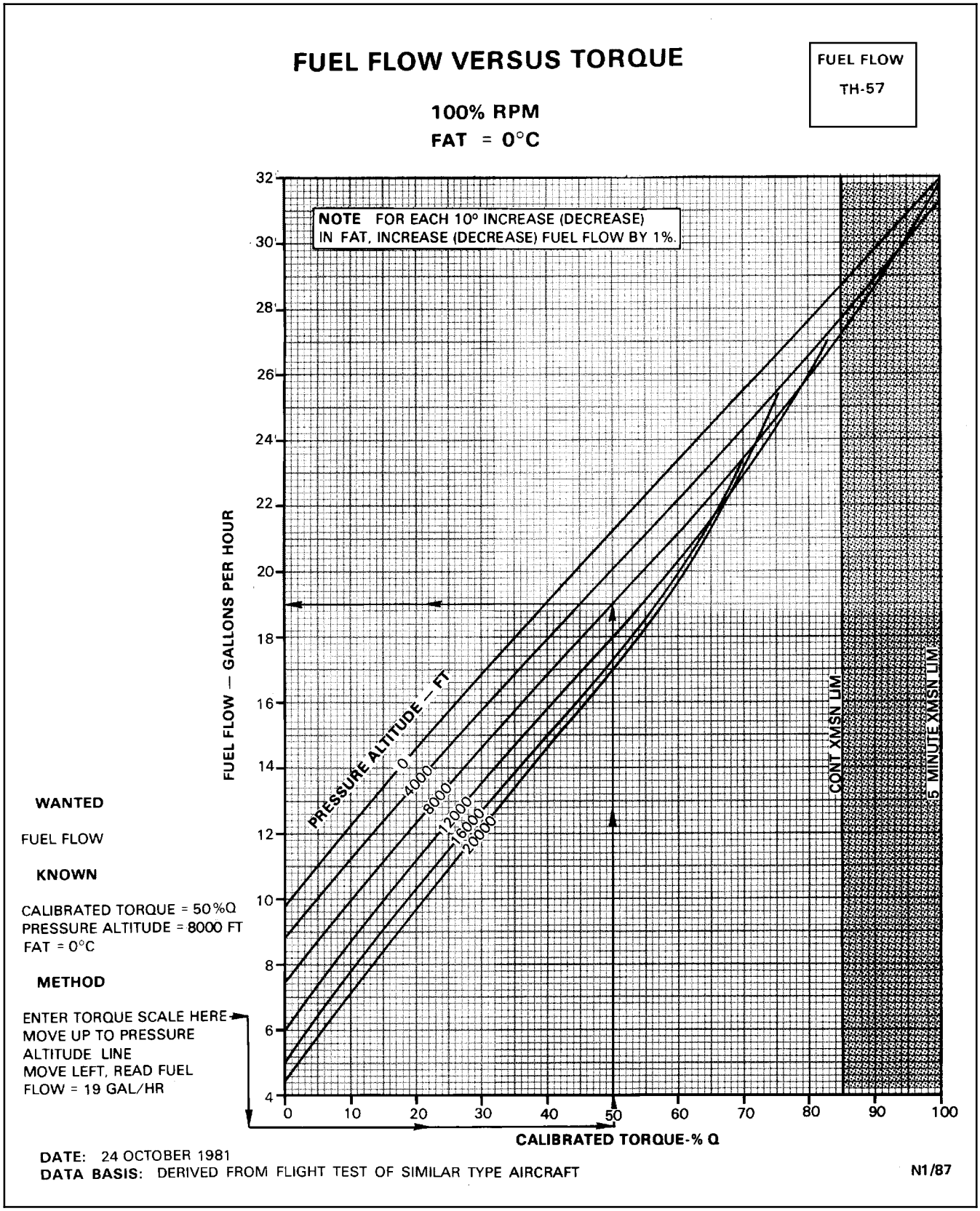

Figure 23-7. Fuel Flow Chart (Sheet 1 of 2)

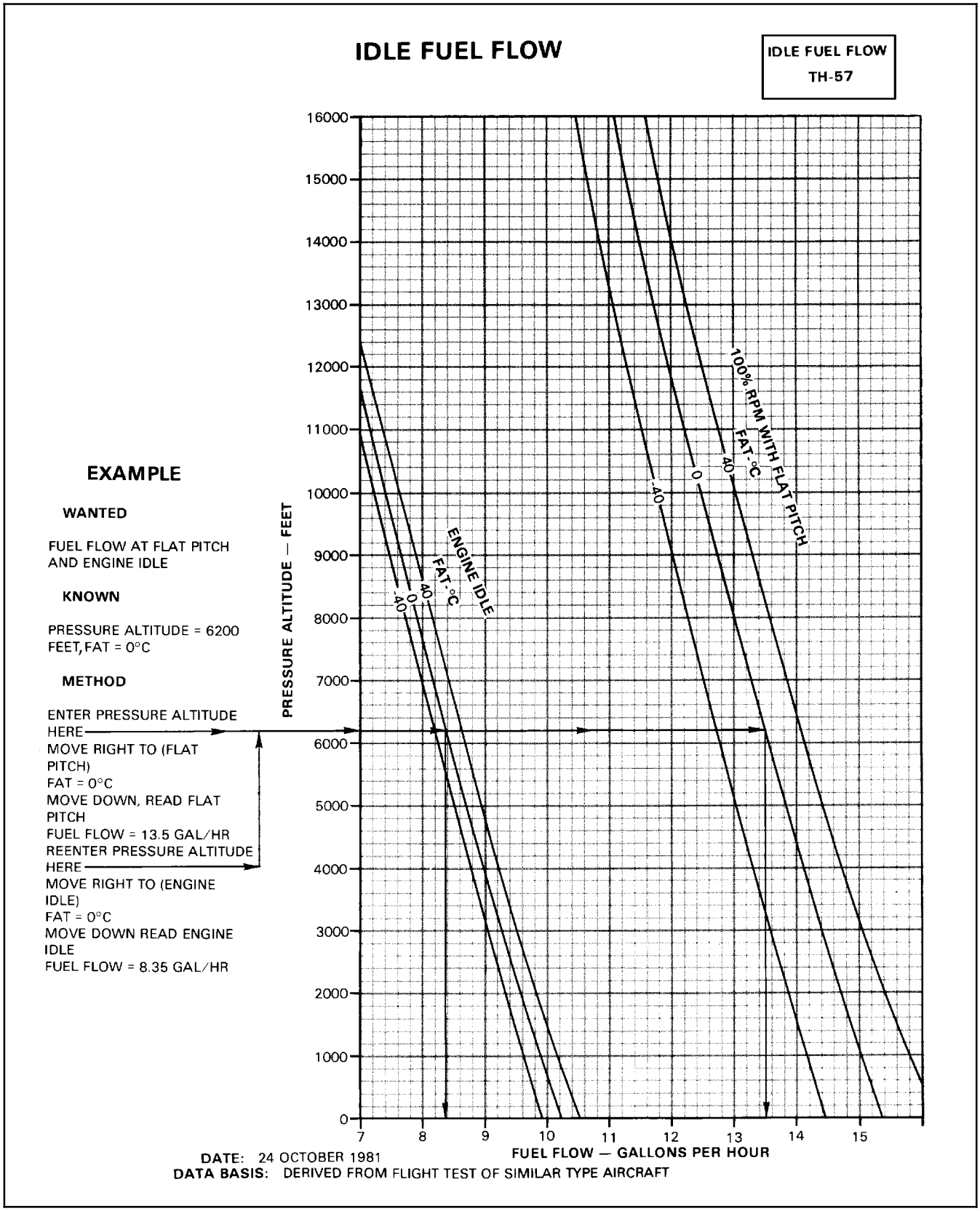

Figure 23-7. Fuel Flow Chart (Sheet 2)

CHAPTER 24

Takeoff

24.1 HOVERING CHARTS

The hover charts (Figure 24-1, sheets 1 through 4) show the hover ceiling and the torque required to hover respectively at various pressure altitudes, ambient temperatures, gross weights, and skid heights. Maximum skid height for hover can also be obtained by using the torque available from Figure 23-5.

Controllability during downwind hovering, crosswinds, and rearward flight has been demonstrated to be adequate during FAA certification test. The capability of the helicopter to hover in a 17-knot right crosswind and to fly rearward to 30 knots has been demonstrated.

The primary use of the charts is illustrated by the charts examples. In general, to determine the hover ceiling or the torque required to hover, it is necessary to know the pressure altitude, temperature, gross weight, and the desired skid height.

In addition to its primary use, the hover chart (Figure 24-1, sheet 1) can also be used to determine the predicted maximum hover height that is needed for use of the takeoff chart (Figure 24-2). To determine maximum hover height, proceed as follows:

1. Enter chart at appropriate pressure altitude.
2. Move right to FAT.
3. Move down to gross weight.
4. Move left to intersection with maximum power available (obtained from Figure 23-5).
5. Read predicted maximum skid height. This height is the maximum hover height.

24.2 TAKEOFF CHART

The takeoff chart (Figure 24-2) shows the distances to clear various obstacle heights, based upon a level acceleration technique. Takeoff distance is shown as a function of several hover height capabilities. The upper chart grid presents data for climbout at a constant 35-knot INDICATED airspeed. The two lower grids present data for climbouts at various TRUE airspeeds.

Note

The hover heights shown on the chart are only a measure of the helicopter climb capacity and do not imply that a higher-than-normal hover height should be used during the actual takeoff.

The primary use of this chart is illustrated by the chart example. The main consideration for takeoff performance is the hovering skid height capability, which includes the efforts of pressure altitude, free air temperature, gross weight, and torque. Hover height capability is determined by use of the hover chart (Figure 24-1).

A hover check can be made to verify the hover capability. If winds are present, the hover check may disclose that the helicopter can actually hover at a greater skid height than the calculated value, as the hover chart is based upon calm wind conditions.

The takeoff chart is based upon calm wind conditions. Because surface wind velocity and direction cannot accurately be predicted, all takeoff planning should be based upon calm wind conditions. Takeoff into any prevailing wind will improve the takeoff performance.

WARNING

A tailwind during takeoff and climbout will increase the obstacle clearance distance and could prevent a successful takeoff.

All takeoff performance data are based upon the torque used in determining the hover capabilities in Figure 24-1.

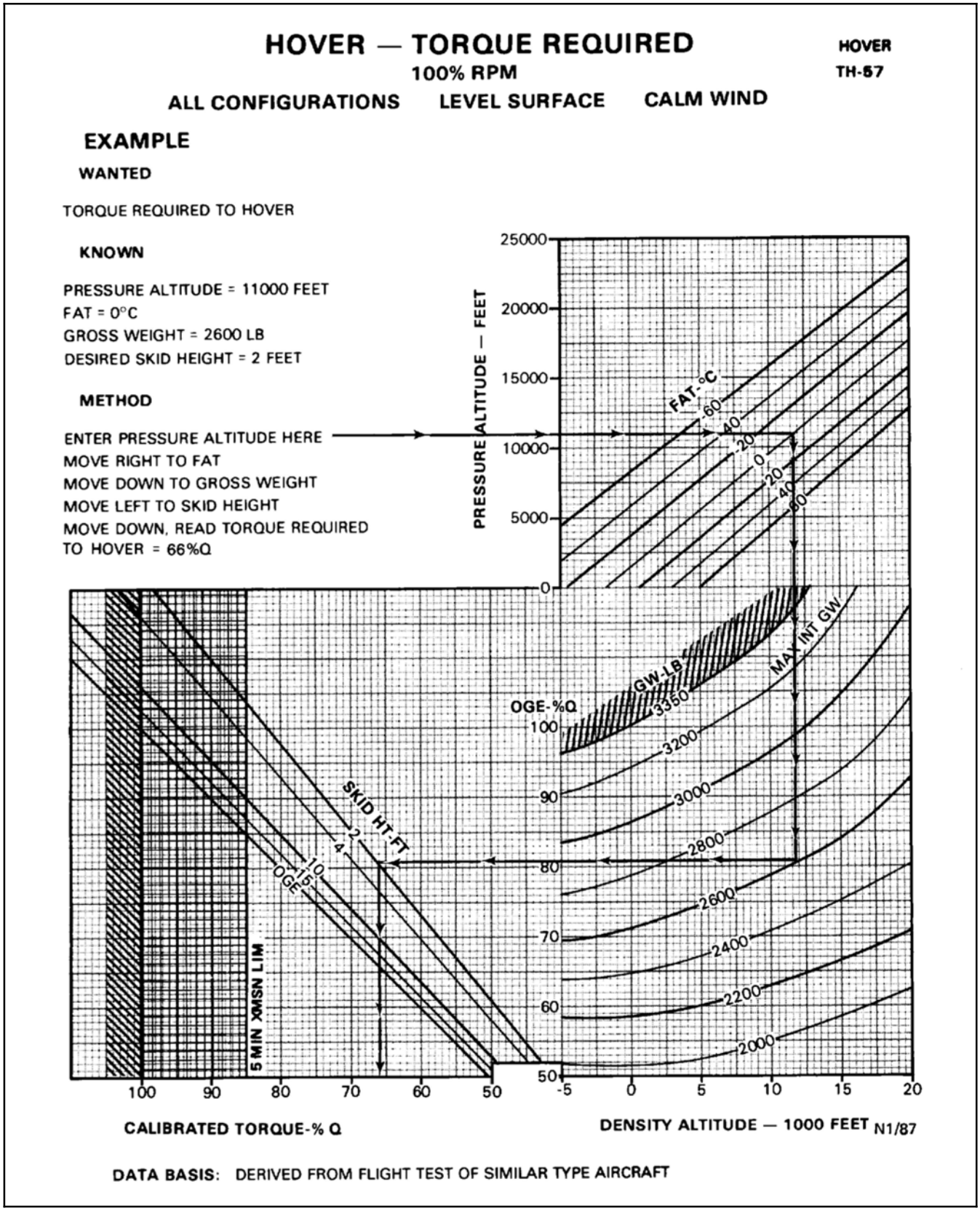

Figure 24-1. Hover Chart (Sheet 1 of 4)

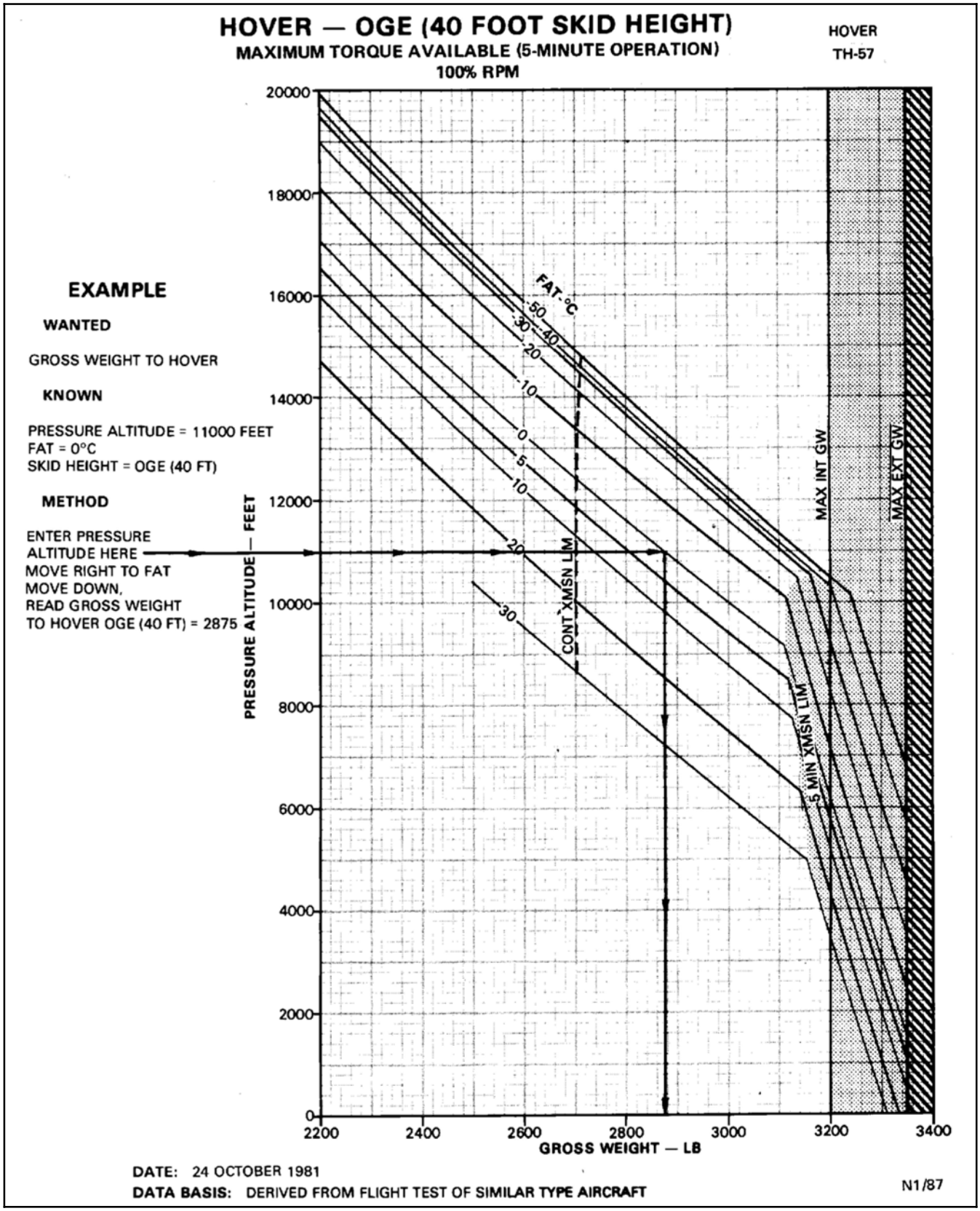

Figure 24-1. Hover Chart (Sheet 2)

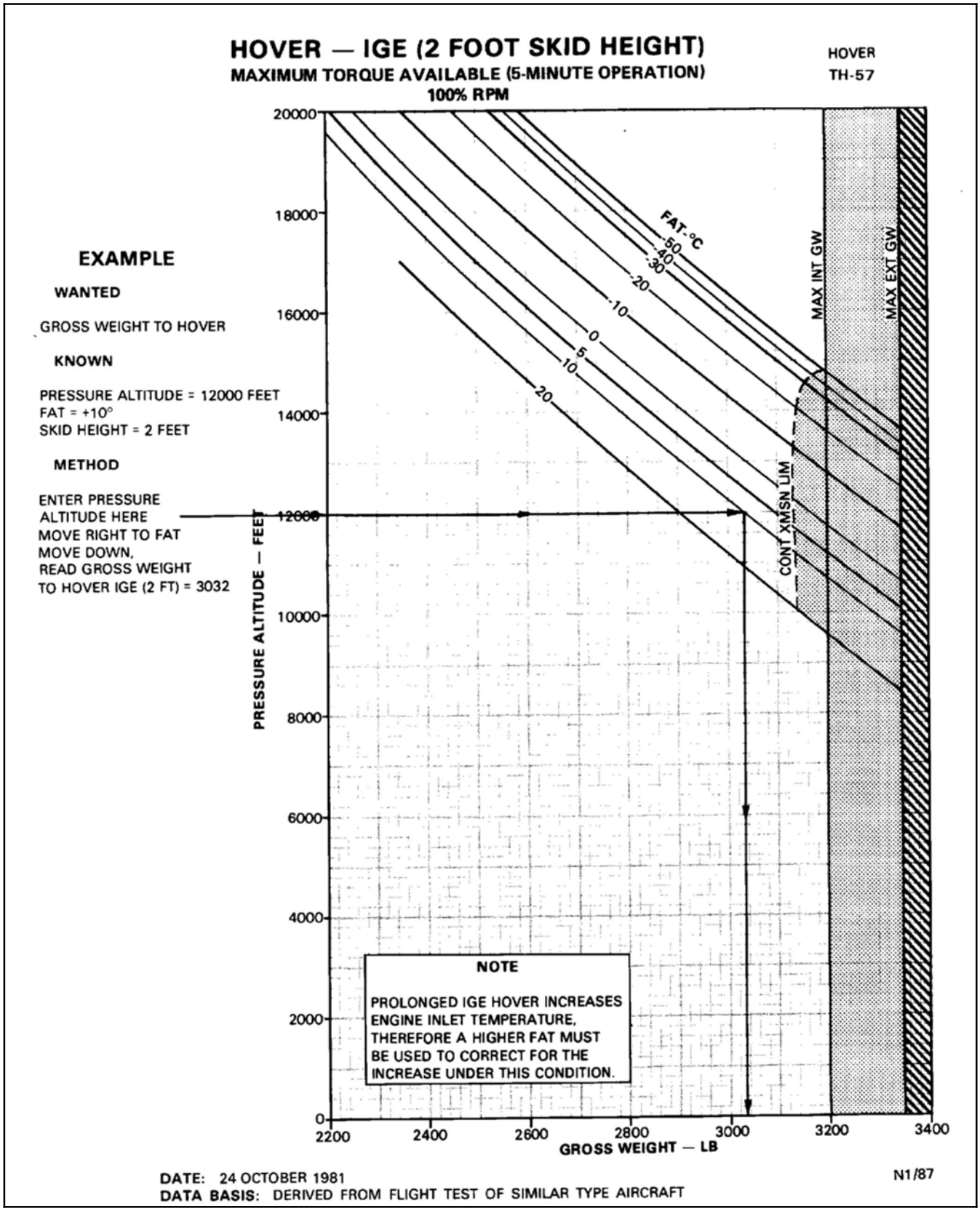

Figure 24-1. Hover Chart (Sheet 3)

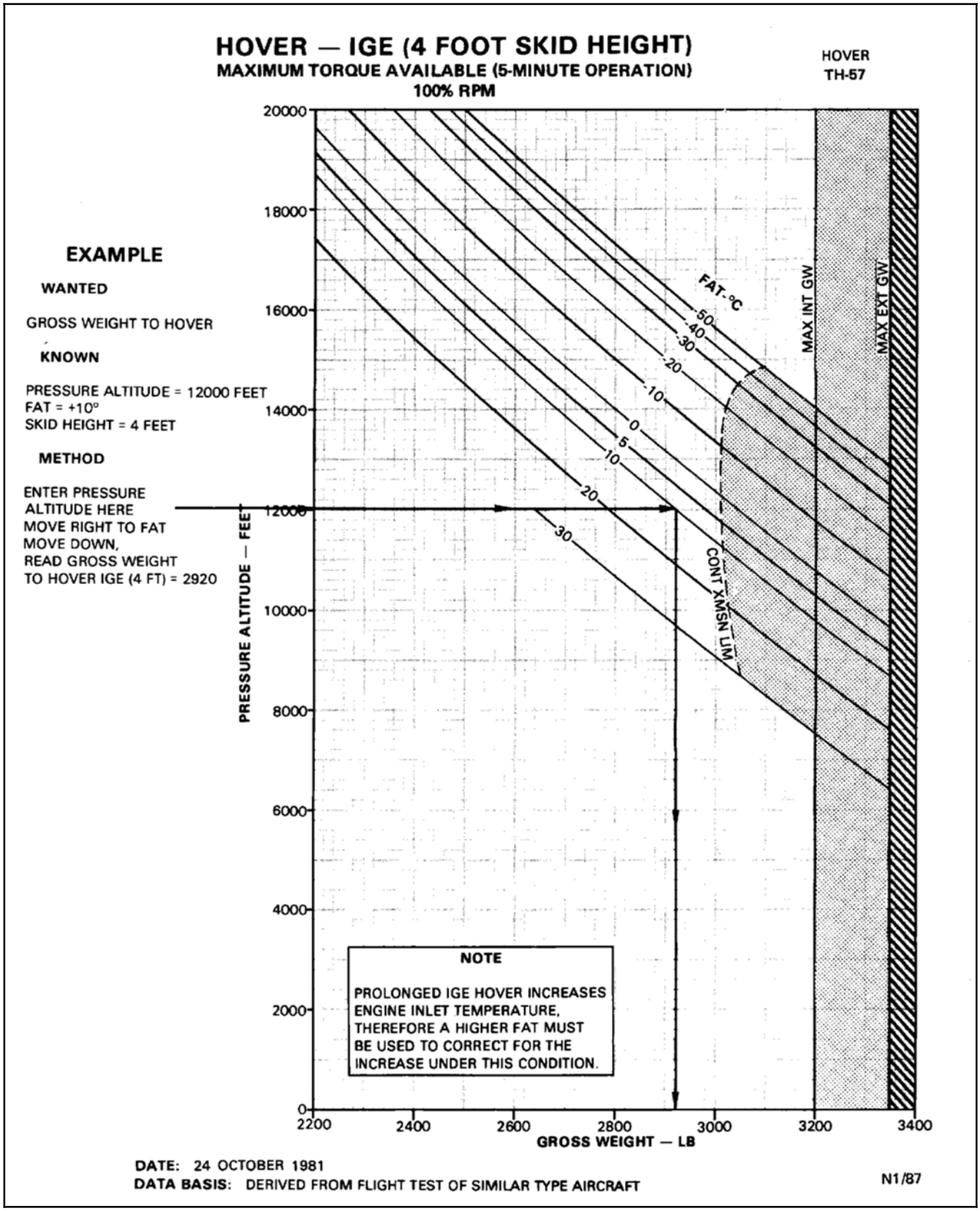

Figure 24-1. Hover Chart (Sheet 4)

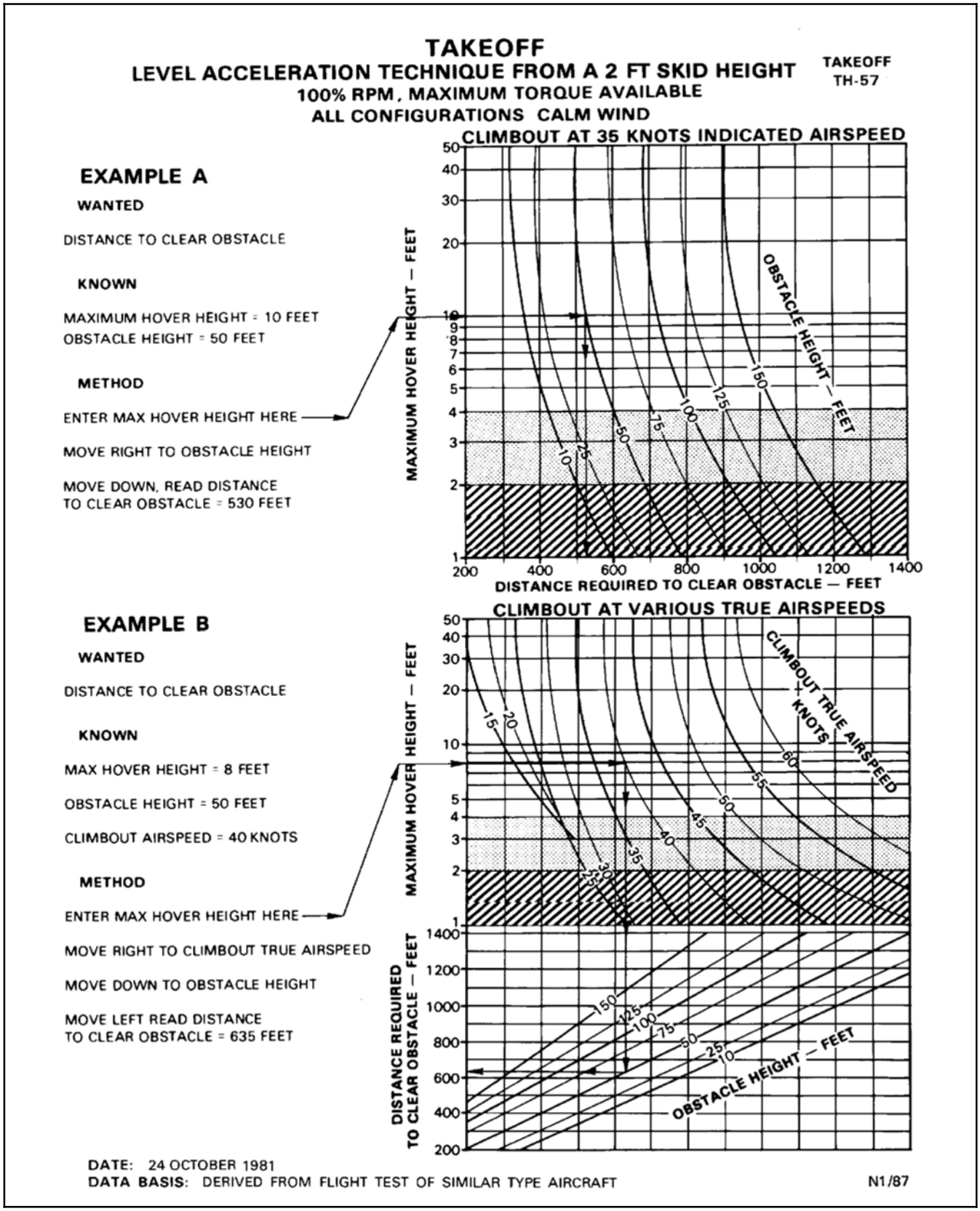

Figure 24-2. Takeoff Chart

CHAPTER 25

Climb

25.1 CLIMB PERFORMANCE CHARTS

The climb performance charts (Figure 25-1) represent a synthesis of the cruise charts to ease estimation of the climb portion of the flight plan. The charts show relationships between gross weight, initial and final altitude and temperatures, and time to climb, distance covered while climbing, and fuel expended while climbing. The first chart (Figure 25-1, sheet 1 of 2) is presented for climbing at maximum torque (5–minute operation) and the second chart (Figure 25-1, sheet 2) is presented for (continuous operation) climbing. Both charts may be used for all drag configurations.

Enter at the top left at the known gross weight, move right to the initial altitude, move down to the free air temperature at that altitude, and move left and record time, distance, and fuel consumed for that altitude. Enter again at the gross weight, move right to the final altitude, move down to the free air temperature at that altitude, and move right and record the time, distance, and fuel for that altitude. Subtract the time, distance, and fuel values of the initial altitude–temperature condition from those of the final altitude–temperature condition to find the time to climb, distance covered, and fuel used while climbing.

The charts represent climb at optimum condition (i.e., minimum power required and torque available). Climb is assumed to be at 50 KIAS as this is near the airspeed for maximum rate of climb at most atmospheric conditions. Warmup and taxi fuel are not included in fuel flow calculations. Climb performance is calculated for 100 percent rpm, particle separator installed. The charts are based upon a no–wind condition; therefore, distance traveled will not be valid when winds are present.

25.2 CLIMB–DESCENT CHART

The upper grid of the climb–descent chart (Figure 25-2) shows the change in torque (above or below torque required for level flight under the same gross weight and atmospheric conditions) to obtain a given rate of climb or descent. The lower grid of the chart shows the relationships between descent–climb angles, airspeeds, and rates of descent or climb.

The primary uses of the chart are illustrated by the chart examples.

The torque change obtained from the upper grid scale must be added to the torque required for level flight (for climb) or subtracted from the torque required for level flight (for descent), obtained from the appropriate cruise chart in order to obtain a total climb or descent torque.

By entering the bottom of the upper grid with a known torque change, moving upward to the gross weight and left, the corresponding rate of climb or descent may also be obtained.

By entering the lower grid chart with any two of the three parameters, rate of climb/descent can be read directly from the chart. For example, by entering the chart with a known TAS of 65 knots, moving upward to a known climb angle of 9° and then moving left, the corresponding rate of climb (1,025 feet per minute) is obtained.

The climb–descent chart is based on the use of 100 percent rpm.

CLIMB PERFORMANCE

MAXIMUM TORQUE AVAILABLE (5-MINUTE OPERATION)
100% RPM CLIMB AT 50 KIAS

CLIMB
TH-57

EXAMPLE

WANTED

MAXIMUM POWER
TIME TO CLIMB
DISTANCE TRAVELED
FUEL USED

KNOWN

GROSS WEIGHT = 2800 LBS
INITIAL PRESSURE ALTITUDE = 2000 FT
FINAL PRESSURE ALTITUDE = 12000 FT
INITIAL FAT = +40°C
FINAL FAT ESTIMATED AT +20°C

METHOD

ENTER GROSS WEIGHT HERE
MOVE RIGHT TO INITIAL PRESSURE ALTITUDE
MOVE DOWN TO INITIAL FAT ON
TIME, DISTANCE, AND FUEL CHARTS
MOVE LEFT, READ:
TIME = 1.2 MIN
DISTANCE = 0.8 NM
FUEL = 0.60 GAL
REENTER AT SAME GROSS WEIGHT
MOVE RIGHT TO FINAL PRESSURE ALTITUDE
MOVE DOWN TO FINAL FAT, ON TIME,
DISTANCE, AND FUEL CHARTS
MOVE LEFT, READ:
TIME = 8.5 MIN
DISTANCE = 6.9 NM
FUEL = 4.05 GAL
TIME TO CLIMB = (8.5 – 1.2) = 7.3 MIN
DISTANCE COVERED = (6.9 – 0.8) = 6.1 NM
FUEL USED = (4.05 — 0.6) = 3.45 GAL

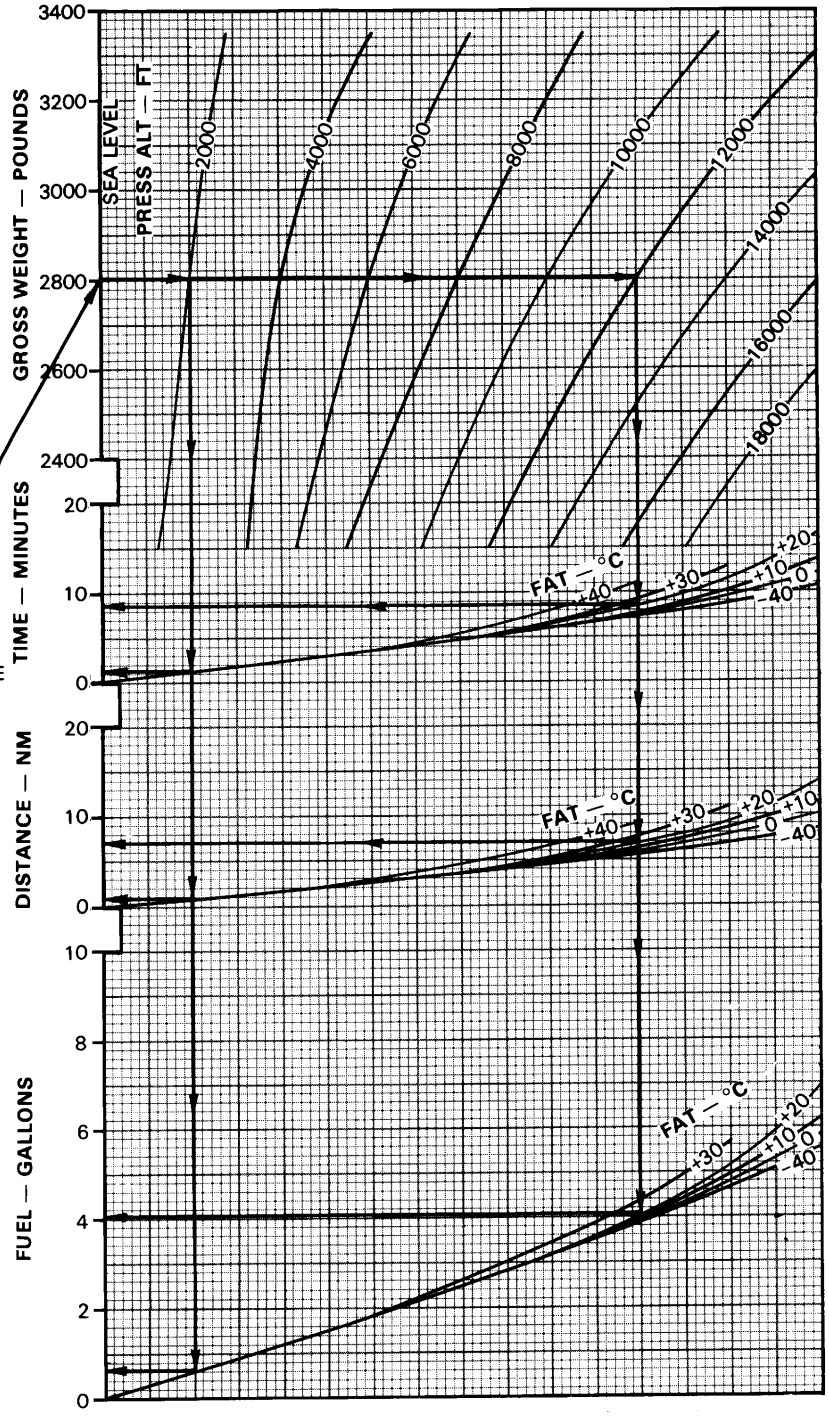

DATA BASIS: DERIVED FROM FLIGHT TEST OF SIMILAR TYPE AIRCRAFT

N1/87

Figure 25-1. Climb Performance Chart (Sheet 1 of 2)

CLIMB PERFORMANCE

(CONTINUOUS OPERATION)

100% RPM CLIMB AT 50 KIAS

CLIMB
TH-57

EXAMPLE

WANTED

CONTINUOUS POWER
TIME TO CLIMB
DISTANCE TRAVELED
FUEL USED

KNOWN

GROSS WEIGHT = 2800 LBS
INITIAL PRESSURE ALTITUDE = 2000 FT
FINAL PRESSURE ALTITUDE = 12000 FT
INITIAL FAT = +40°C
FINAL FAT ESTIMATED AT +20°C

METHOD

ENTER GROSS WEIGHT HERE
MOVE RIGHT TO INITIAL PRESSURE ALTITUDE
MOVE DOWN TO INITIAL FAT ON
TIME, DISTANCE, AND FUEL CHARTS
MOVE LEFT, READ:
TIME = 1.7 MIN
DISTANCE = 1.3 NM
FUEL = 0.80 GAL
REENTER AT SAME GROSS WEIGHT
MOVE RIGHT TO FINAL PRESSURE ALTITUDE
MOVE DOWN TO FINAL FAT, ON TIME,
DISTANCE, AND FUEL CHARTS
MOVE LEFT, READ:
TIME = 12.7 MIN
DISTANCE = 10.4 NM
FUEL = 5.35 GAL
TIME TO CLIMB = (12.7 – 1.7) = 11.0 MIN
DISTANCE COVERED = (10.4 – 1.3) = 9.1 NM
FUEL USED = (5.35 — 0.8) = 4.55 GAL

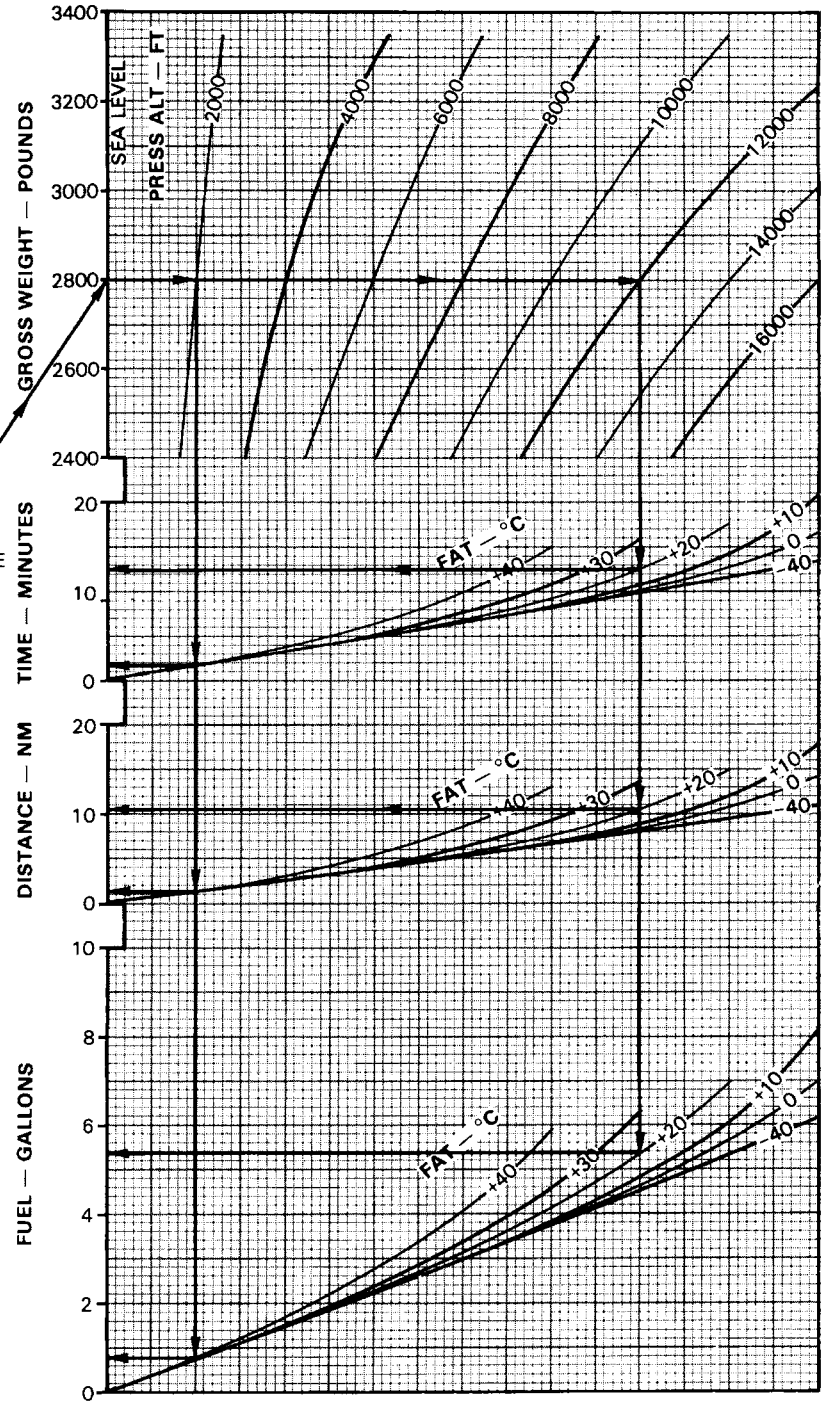

DATA BASIS: DERIVED FROM FLIGHT TEST OF SIMILAR TYPE AIRCRAFT

N1/87

Figure 25-1. Climb Performance Chart (Sheet 2)

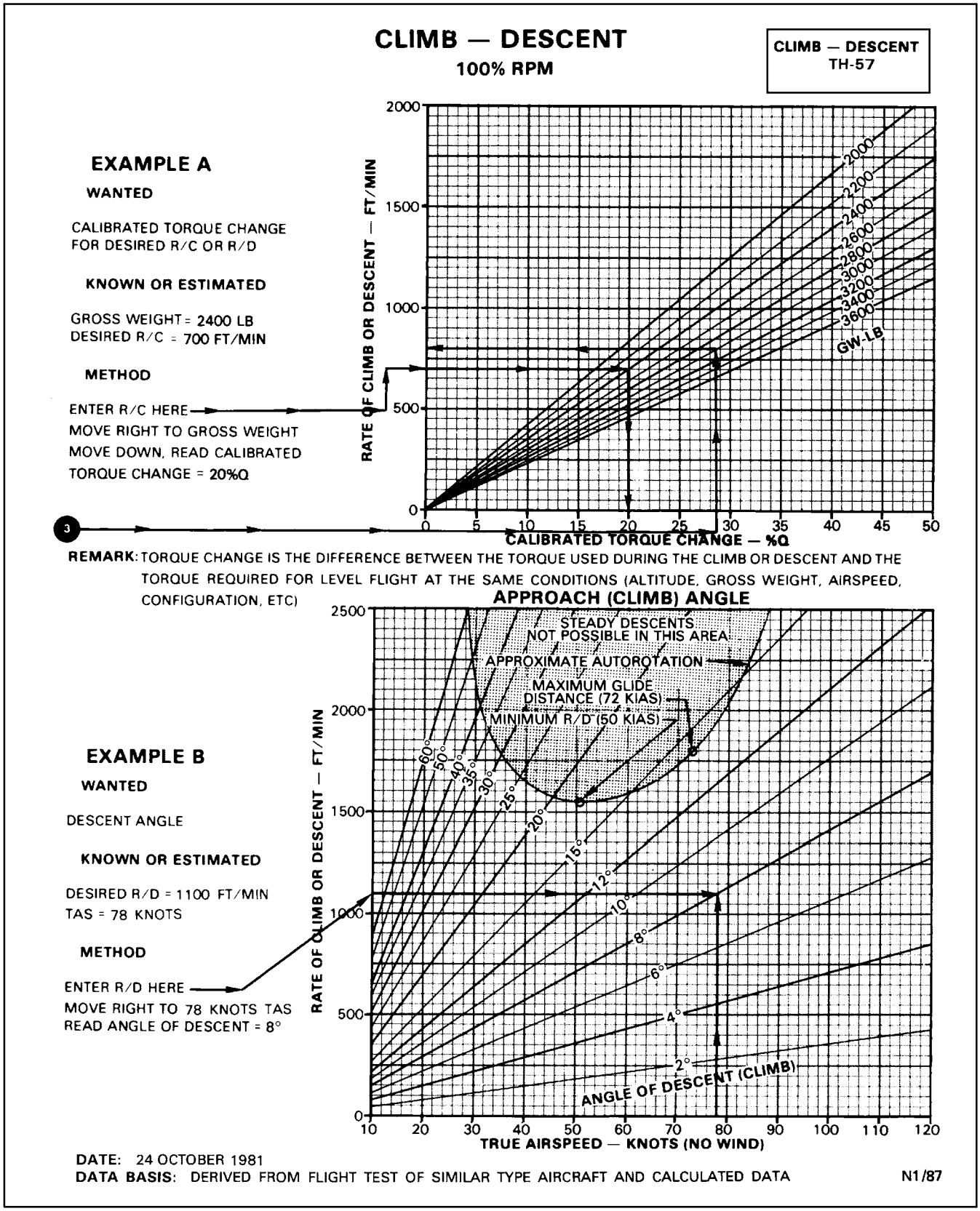

Figure 25-2. Climb-Descent Chart

25.2.1 Example

Wanted. (See Figure 25-1).

Excess torque available for climb at maximum continuous power.

Known.

Clean configuration.

Gross weight = 3,000 pounds.

FAT = -30 °C.

Pressure altitude = 14,000 feet.

Method.

Locate chart. (Figure 25-1).

Find intersection of 3,000 pound gross weight line with the continuous torque available line.

Move down, read torque available = 77.1 PERCENT Q.

Find intersection of 3,000 pound gross weight line with the maximum rate–of–climb line.

Move down, read torque required = 48.4 PERCENT Q.

Excess torque available = (77.1 – 48.4) = 28.7 PERCENT Q.

Wanted. (See Figure 25-2).

Rate of climb at 42 KIAS.

Maximum continuous power.

Known.

Excess torque available (from example on Figure 25-1) = 28.7 PERCENT Q.

Gross weight = 3,000 pounds.

Method.

Enter calibrated torque scale. (Figure 25-1).

Move up to gross weight line.

Move left to rate of climb or descent scale, read rate of climb = 800 FEET/MINUTE.

25.3 SERVICE CEILING CHARTS

Figure 25-3 presents service ceiling (100 fpm rate–of–climb capability) for continuous torque available. Data is presented for the range of operational pressure altitudes and free air temperatures.

These charts may be used in a variety of ways. The altitude capability for given gross weight and outside air temperature may be obtained, or for a given takeoff gross weight, the maximum obstacle clearance for a given FAT is readily available. The example on the chart is self–explanatory. By entering the bottom of the chart at gross weight and projecting up to a given FAT and then moving to the left, the pressure altitude capability for 100 fpm rate of climb is found.

The service ceilings are based on 100 percent rpm and 50 KIAS and stated power.

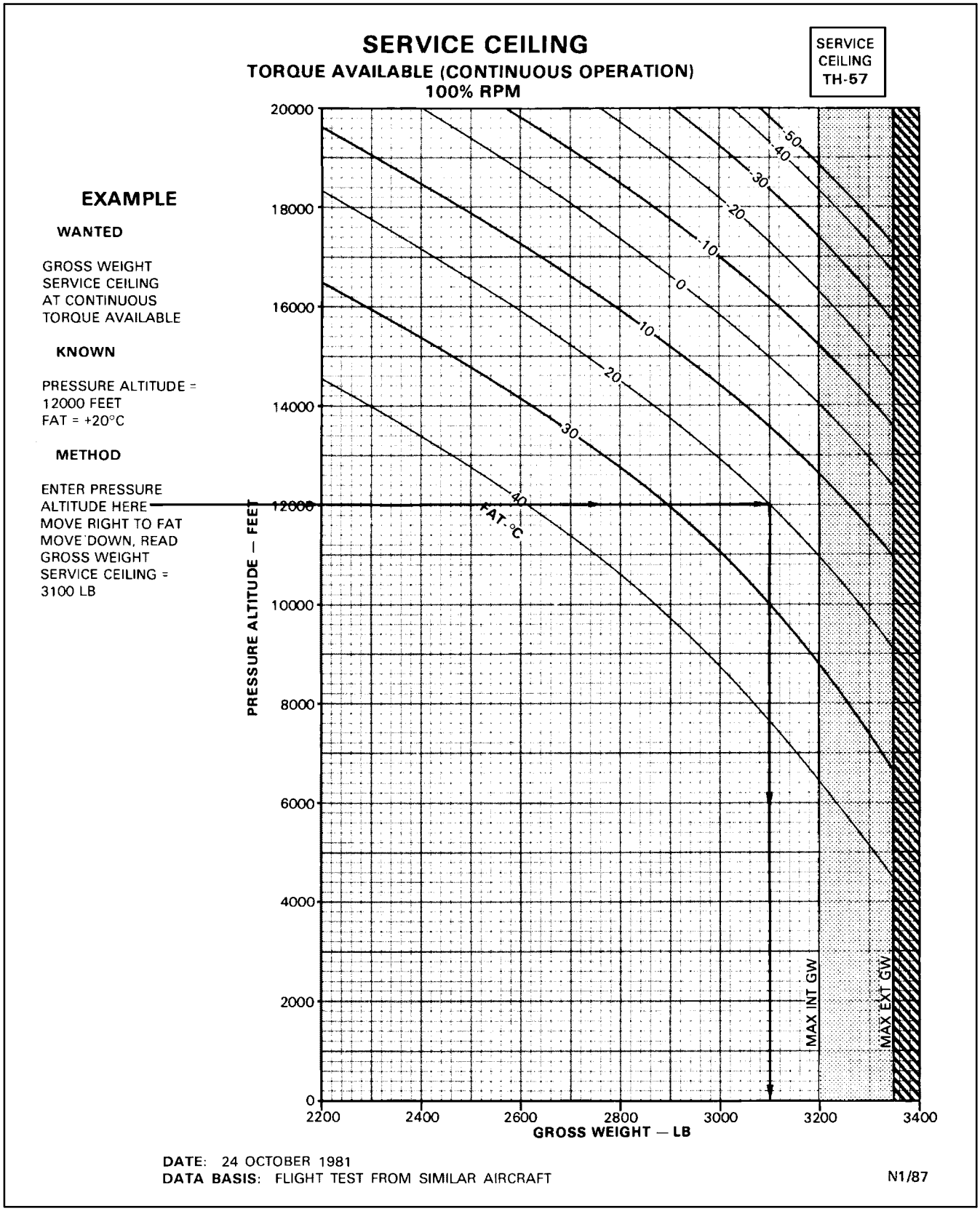

Figure 25-3. Service Ceiling

CHAPTER 26

Cruise

26.1 CRUISE CHARTS

The cruise charts (Figure 26-1, sheets 1 through 16) show the percent torque and engine rpm required for level flight at various pressure altitudes, airspeeds, gross weights, and fuel flows.

Note

The cruise charts are basically arranged by FAT groupings. Figure 26-1, sheets 1 through 16, is based upon operation with clean configuration.

The primary use of the charts is illustrated by the examples provided in Figure 26-1, The first step for chart use is to select the proper chart, based upon the planned drag configuration, pressure altitude, and anticipated free air temperature. Normally, sufficient accuracy can be obtained by selecting the chart nearest to the planned cruising altitude and FAT or the next higher altitude and FAT. If greater accuracy is required, interpolation between altitudes and/or temperatures will be required. You may enter the charts on any side: TAS, IAS, torque pressure, or fuel flow, and then move vertically or horizontally to the gross weight, then to the other three parameters. Maximum performance conditions are determined by entering the chart where the maximum range or maximum endurance and rate–of–climb lines intersect the appropriate gross weight; then read airspeed, fuel flow, and percent torque. For conservatism, use the gross weight at the beginning of cruise flight. For greater accuracy on long flights, it is preferable to determine cruise information for several flight segments in order to allow for decreasing fuel weights (reduced gross weight). The cruise charts are based upon operation at 100 percent rpm, particle separator installed. The following parameters contained in each chart are further explained as follows.

26.1.1 Airspeed

True and indicated airspeeds are presented at opposite sides of each chart. On any chart, indicated airspeed can directly be converted to true airspeed (or vice versa) by reading directly across the chart without regard for other chart information.

26.1.2 Torque (Percent Q)

Because pressure altitude and temperature are fixed for each chart, torque varies according to gross weight and airspeed.

26.1.3 Fuel Flow

Fuel flow scales are provided opposite the torque scales. On any chart, torque may be converted directly to fuel flow without regard for other chart information. All fuel flow information is presented with particle separator installed. Fuel flow increases 2 percent with reverse flow inlets installed.

26.1.4 Maximum Range

The maximum range lines indicate the combinations of weight and airspeed that will produce the greatest flight range per gallon of fuel under zero wind conditions. When the maximum range speed is beyond the maximum permissible speed (V_{ne}), use V_{ne} cruising speed to obtain maximum range.

26.1.5 Maximum Endurance and Maximum Rate of Climb

The maximum endurance and maximum rate–of–climb lines indicate the airspeed for minimum torque required to maintain level flight for each gross weight, FAT, and pressure altitude. As minimum torque will provide minimum fuel flow, maximum flight endurance will be obtained at the airspeeds indicated.

26.2 TIME AND RANGE VS. FUEL CHART

The time and range vs. fuel chart (Figure 26-2) shows the en route time and the distance that the helicopter can cover while in level cruise with calm winds. The only information needed is the cruise fuel, the fuel flow, and the cruise true airspeed.

CRUISE

CRUISE
TH-57

PRESSURE ALTITUDE — SEA LEVEL

CLEAN CONFIGURATION 100% RPM

FAT COLDER THAN -20°C

SEA LEVEL
PRESSURE ALTITUDE

EXAMPLE

WANTED

TORQUE REQUIRED FOR LEVEL FLIGHT,
FUEL FLOW, INDICATED AIRSPEED

KNOWN

CLEAN CONFIGURATION
GROSS WEIGHT = 2800 LB
PRESSURE ALTITUDE = 1000 FEET
FAT = -30°C
DESIRED TRUE AIRSPEED = 90 KNOTS

METHOD (INTERPOLATE)

ENTER TRUE AIRSPEED HERE
READ TORQUE, FUEL FLOW, AND IAS ON EACH
ADJACENT ALTITUDE AND/OR FAT, THEN
INTERPOLATE BETWEEN ALTITUDE AND FAT

SEE NEXT PAGE 1

ALTITUDE, FEET	SEA LEVEL	2000 FEET	1000 FEET
FAT, °C	-30	-30	-30
TORQUE, %Q	63.5	61.3	62.4
FUEL FLOW, GAL/HR	23.5	22.5	23.0
IAS, KNOTS	93.5	93.5	93.5

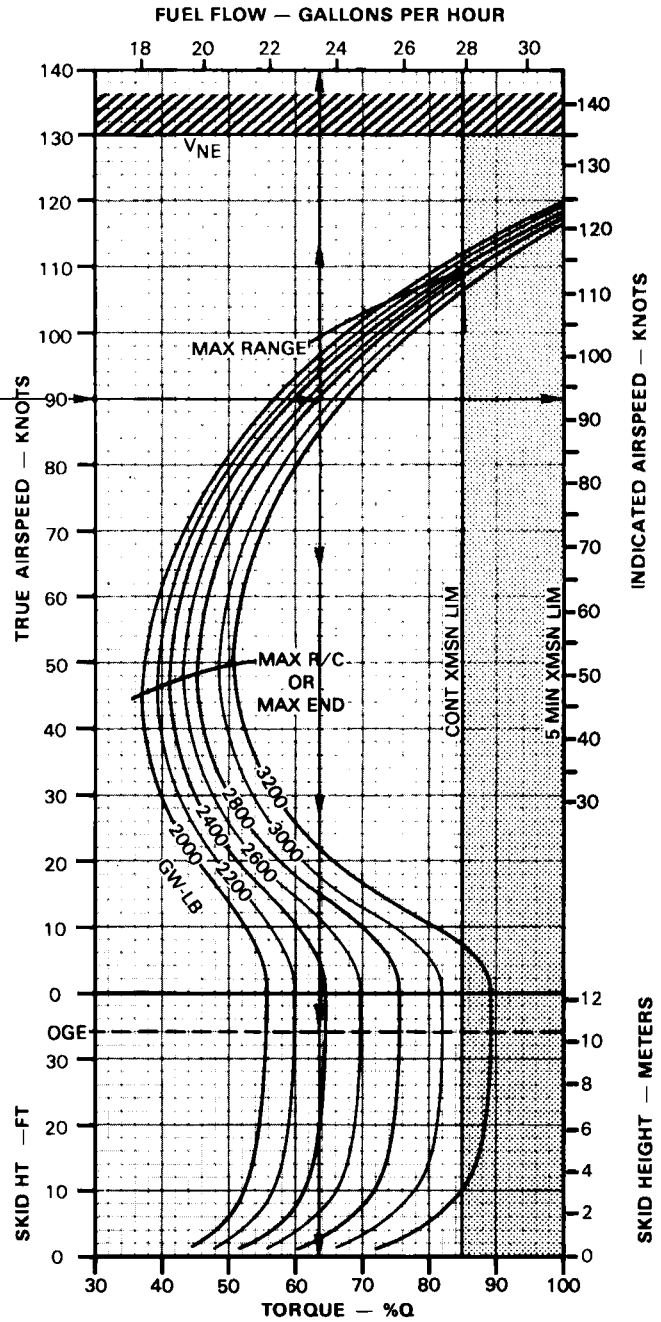

DATE: 24 OCTOBER 1981
DATA BASIS: DERIVED FROM FLIGHT TEST OF SIMILAR TYPE AIRCRAFT

N1/87

Figure 26-1. Cruise Chart (Sheet 1 of 16)

CRUISE

PRESSURE ALTITUDE — 2000 FEET

CLEAN CONFIGURATION 100% RPM

CRUISE
TH-57

FAT COLDER THAN -20°C

EXAMPLE A

WANTED

SPEED FOR MAXIMUM RANGE
TORQUE REQUIRED AND FUEL FLOW AT MAXIMUM RANGE
SPEED FOR MAXIMUM ENDURANCE

KNOWN

CLEAN CONFIGURATION, FAT = -30°C,
PRESSURE ALTITUDE = 2000 FEET,
AND GROSS WEIGHT = 2800 POUNDS

METHOD

LOCATE (-30°C FAT, 2000 FEET) CHART
FIND INTERSECTION OF 2800 LB GROSS WEIGHT LINE
WITH THE MAXIMUM RANGE LINE
TO READ SPEED FOR MAXIMUM RANGE:
MOVE LEFT, READ TAS = 111 KNOTS AND
MOVE RIGHT, READ IAS = 115 KNOTS
TO READ FUEL FLOW REQUIRED:
MOVE UP, READ FUEL FLOW = 27.1 GAL/HR
TO READ TORQUE REQUIRED:
MOVE DOWN, READ TORQUE = 83.7%Q
FIND INTERSECTION OF 2800 LB GROSS WEIGHT LINE
WITH THE MAXIMUM ENDURANCE LINE
TO READ SPEED FOR MAXIMUM ENDURANCE
MOVE LEFT, READ TAS = 49.3 KNOTS AND
MOVE RIGHT, READ IAS = 51 KNOTS

SEE PRECEDING PAGE ❶

EXAMPLE B

WANTED

ADDITIONAL TORQUE REQUIRED TO
HOVER IGE 6 FT, ABOVE MAXIMUM
ENDURANCE REQUIREMENT

KNOWN

FAT = -30°C
PRESSURE ALTITUDE = 2000 FEET
GROSS WEIGHT = 2800 POUND

METHOD

FIND INTERSECTION OF 2800 LB
GROSS WEIGHT LINE WITH THE
MAXIMUM ENDURANCE LINE
MOVE DOWN, READ TORQUE FOR
MAXIMUM ENDURANCE = 45%Q

FIND INTERSECTION OF 2800 LB
GROSS WEIGHT LINE WITH THE
6 FT SKID HEIGHT LINE, READ
TORQUE REQUIRED TO HOVER
= 69.6%Q

ADDITIONAL TORQUE REQUIRED
= (69.6 - 45) = 24.6%Q

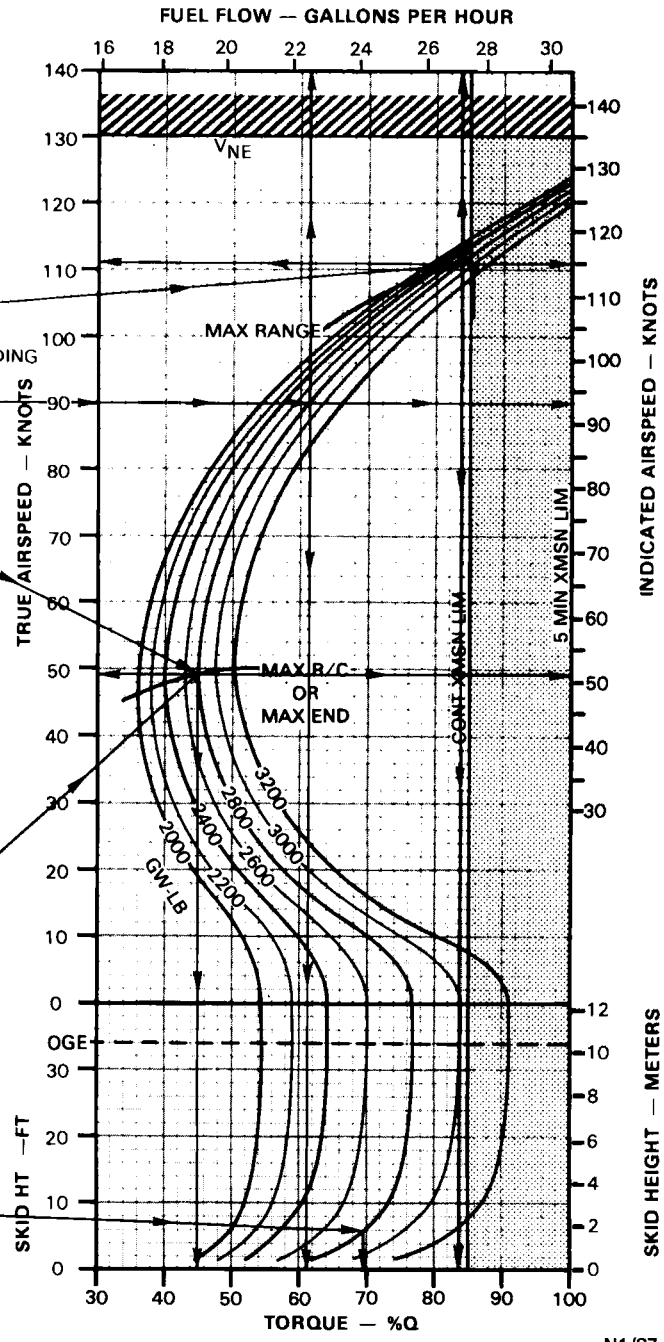

DATE: 24 OCTOBER 1981
DATA BASIS: DERIVED FROM FLIGHT TEST OF SIMILAR TYPE AIRCRAFT

N1/87

Figure 26-1. Cruise Chart (Sheet 2)

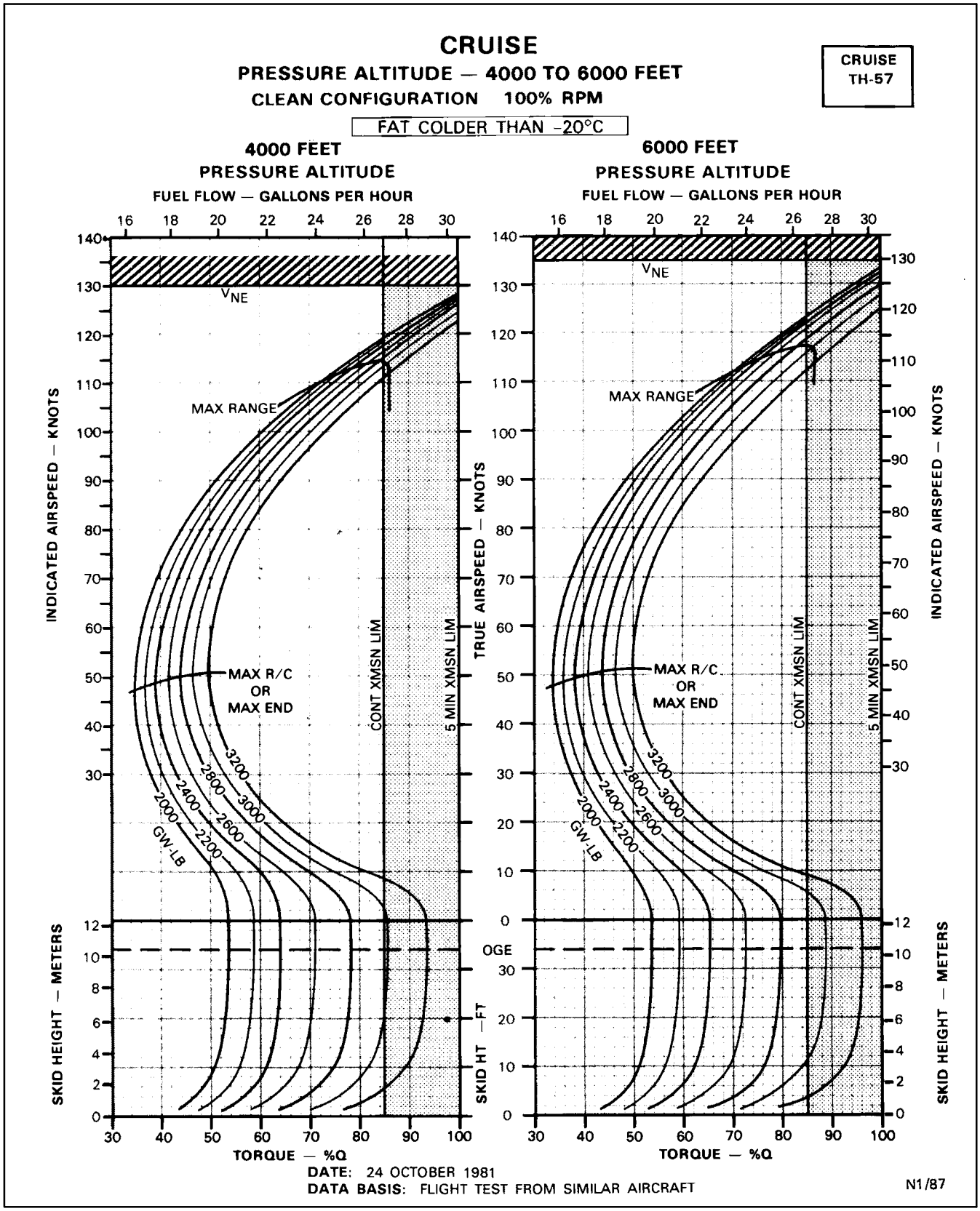

Figure 26-1. Cruise Chart (Sheet 3)

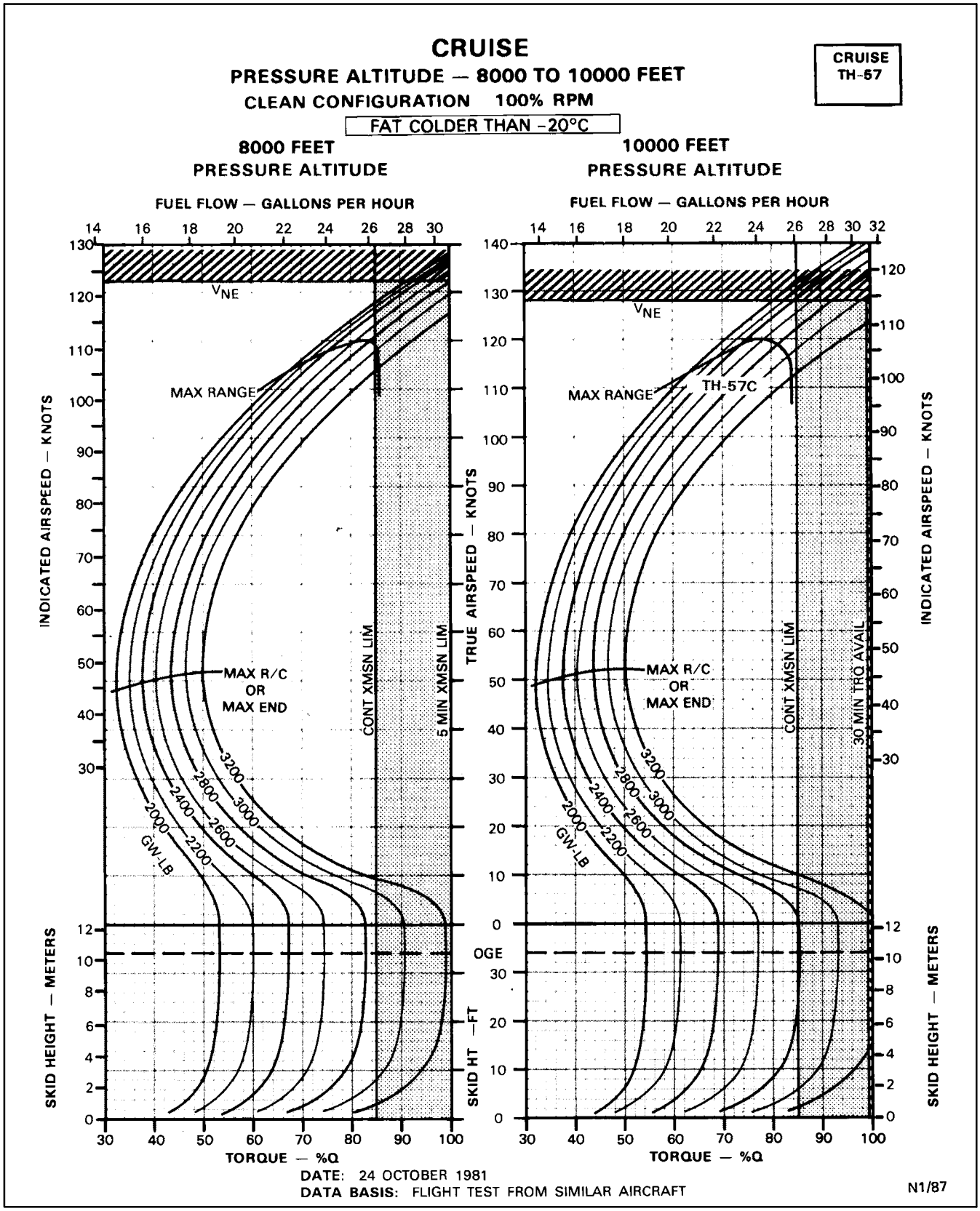

Figure 26-1. Cruise Chart (Sheet 4)

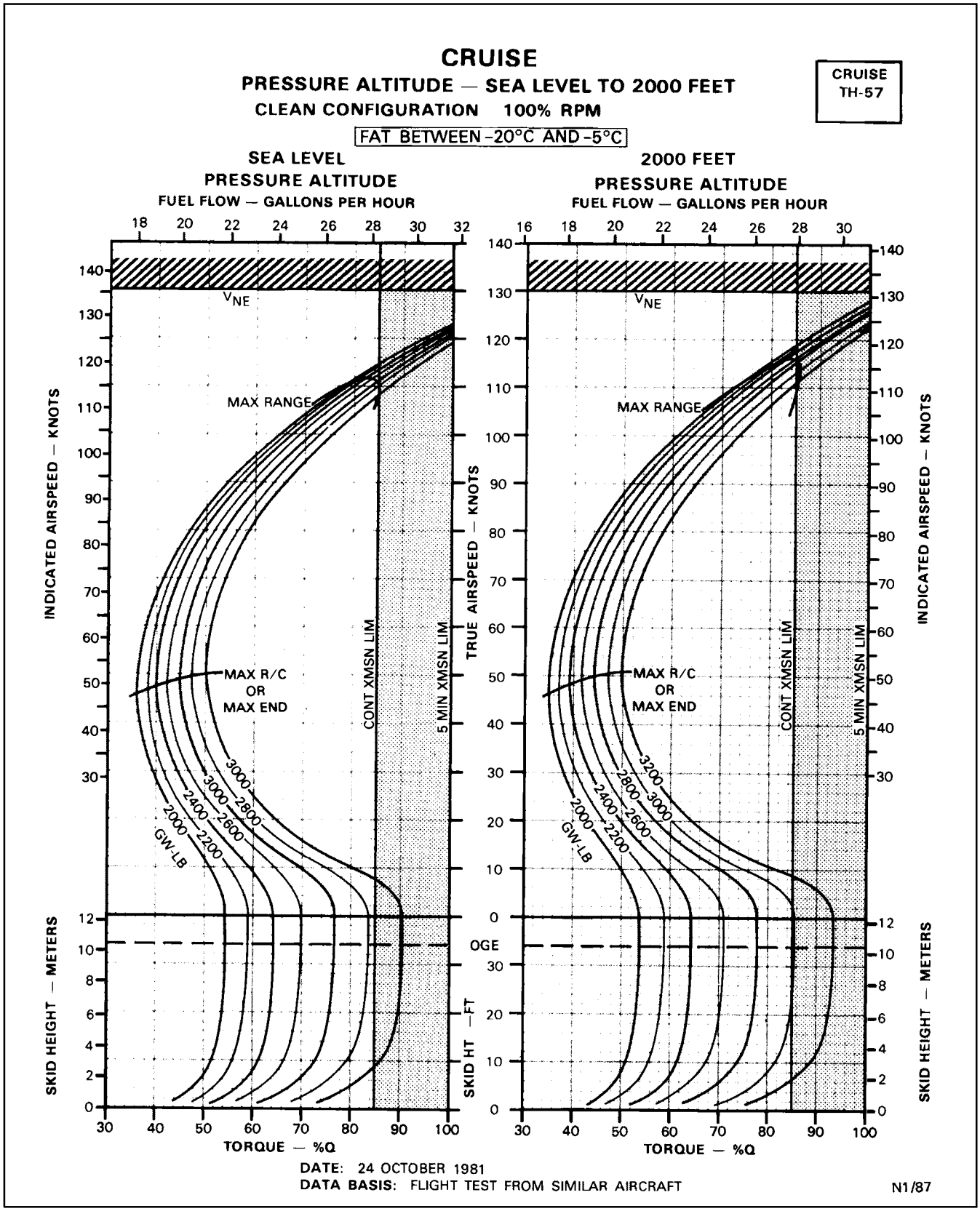

Figure 26-1. Cruise Chart (Sheet 5)

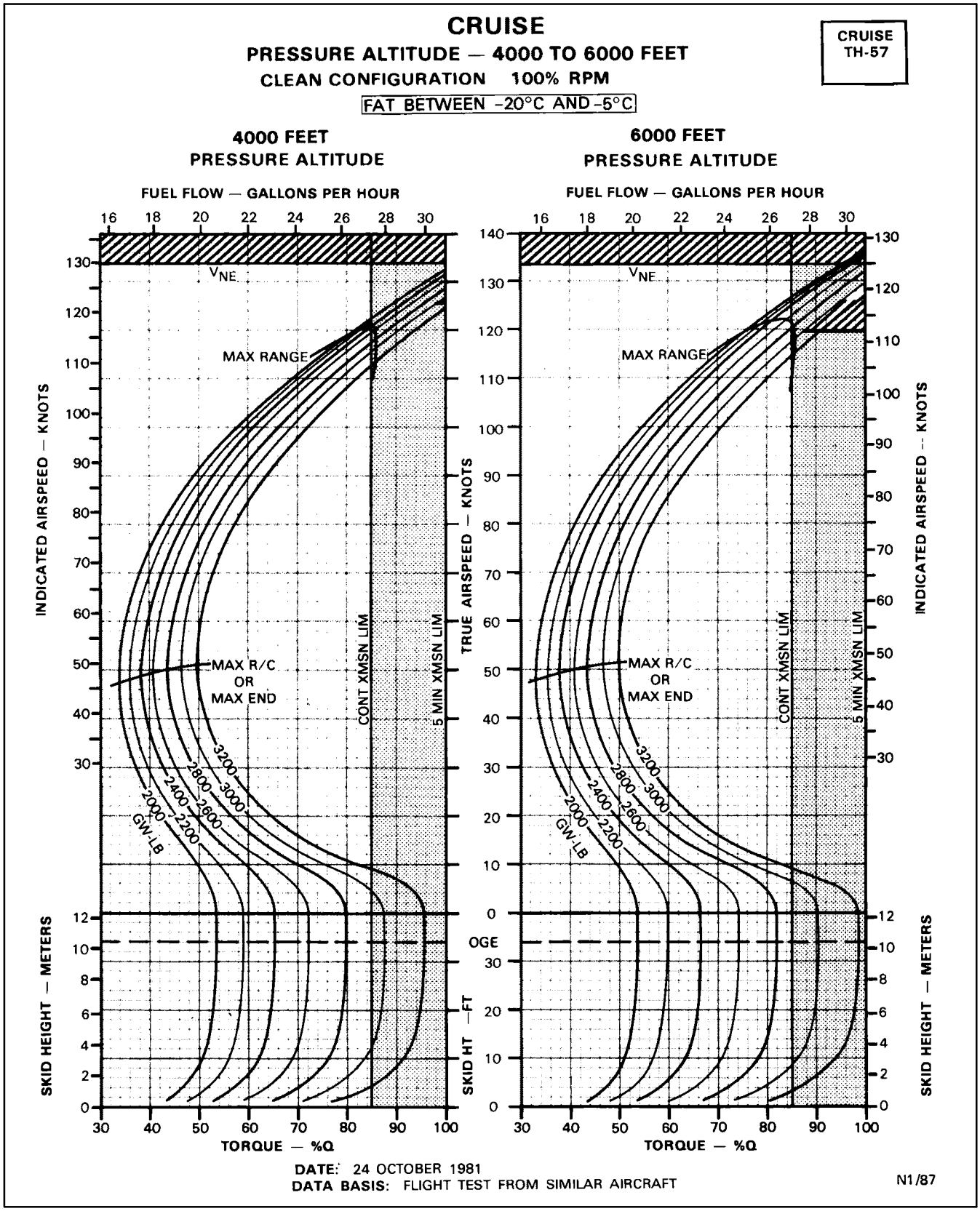

Figure 26-1. Cruise Chart (Sheet 6)

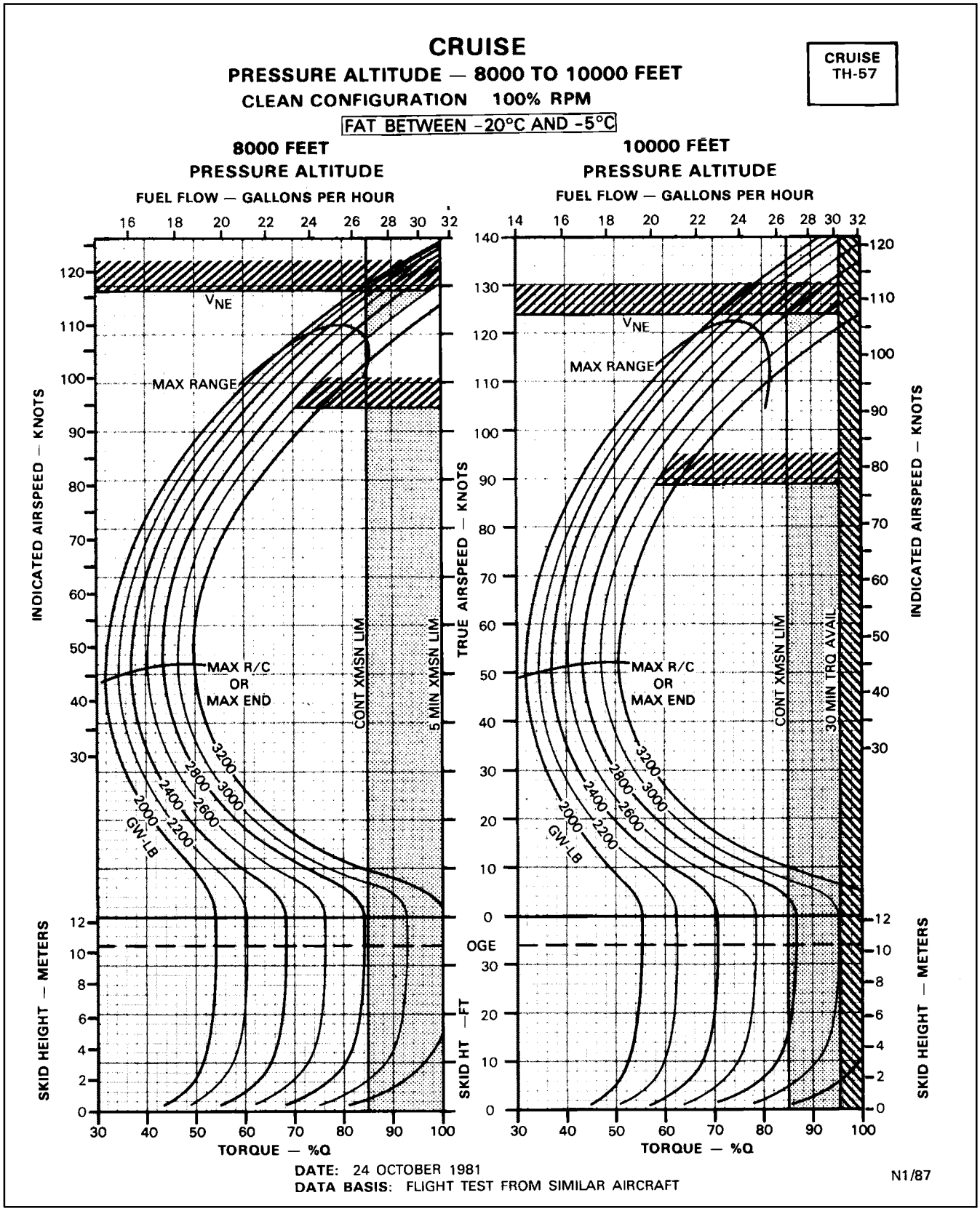

Figure 26-1. Cruise Chart (Sheet 7)

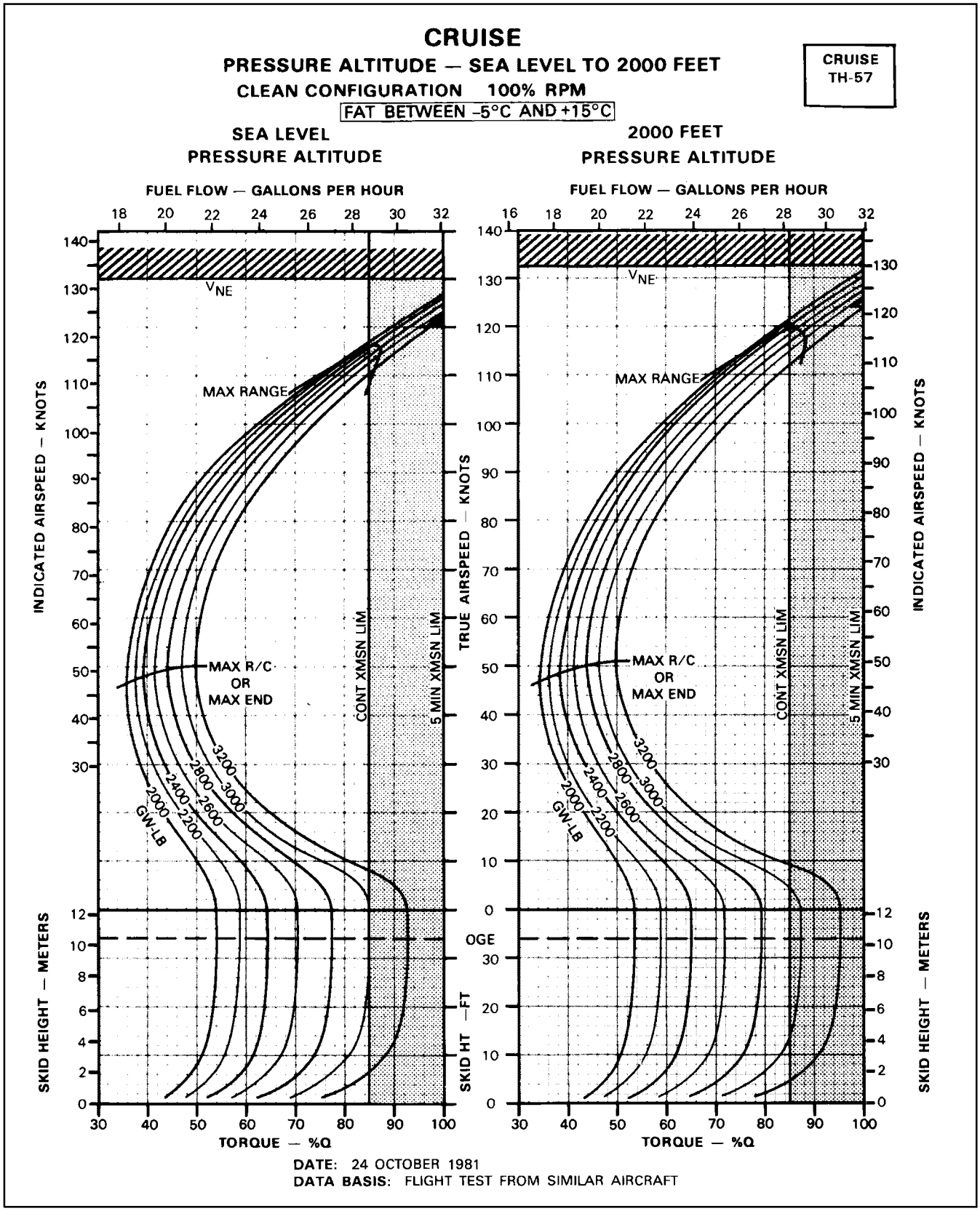

Figure 26-1. Cruise Chart (Sheet 8)

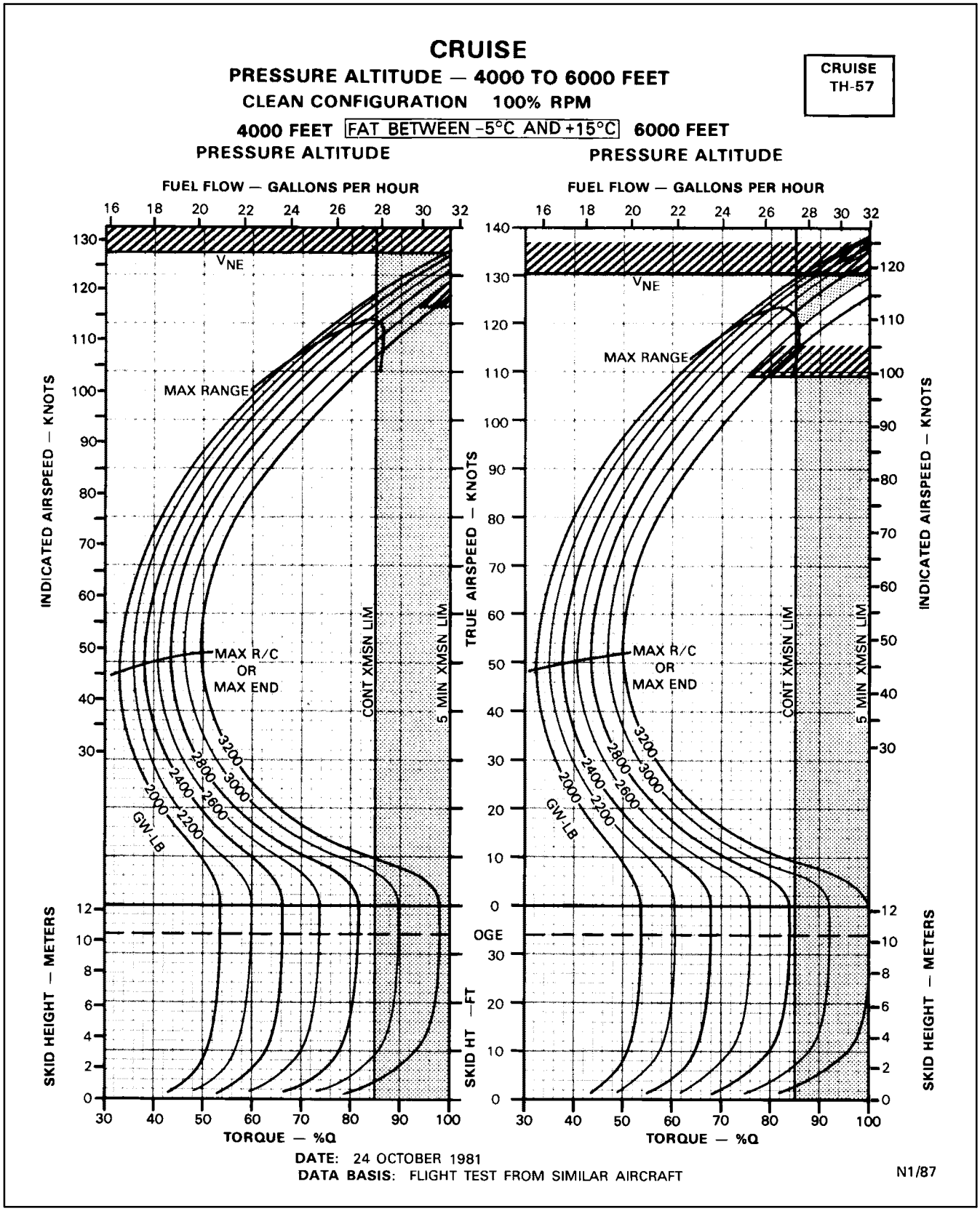

Figure 26-1. Cruise Chart (Sheet 9)

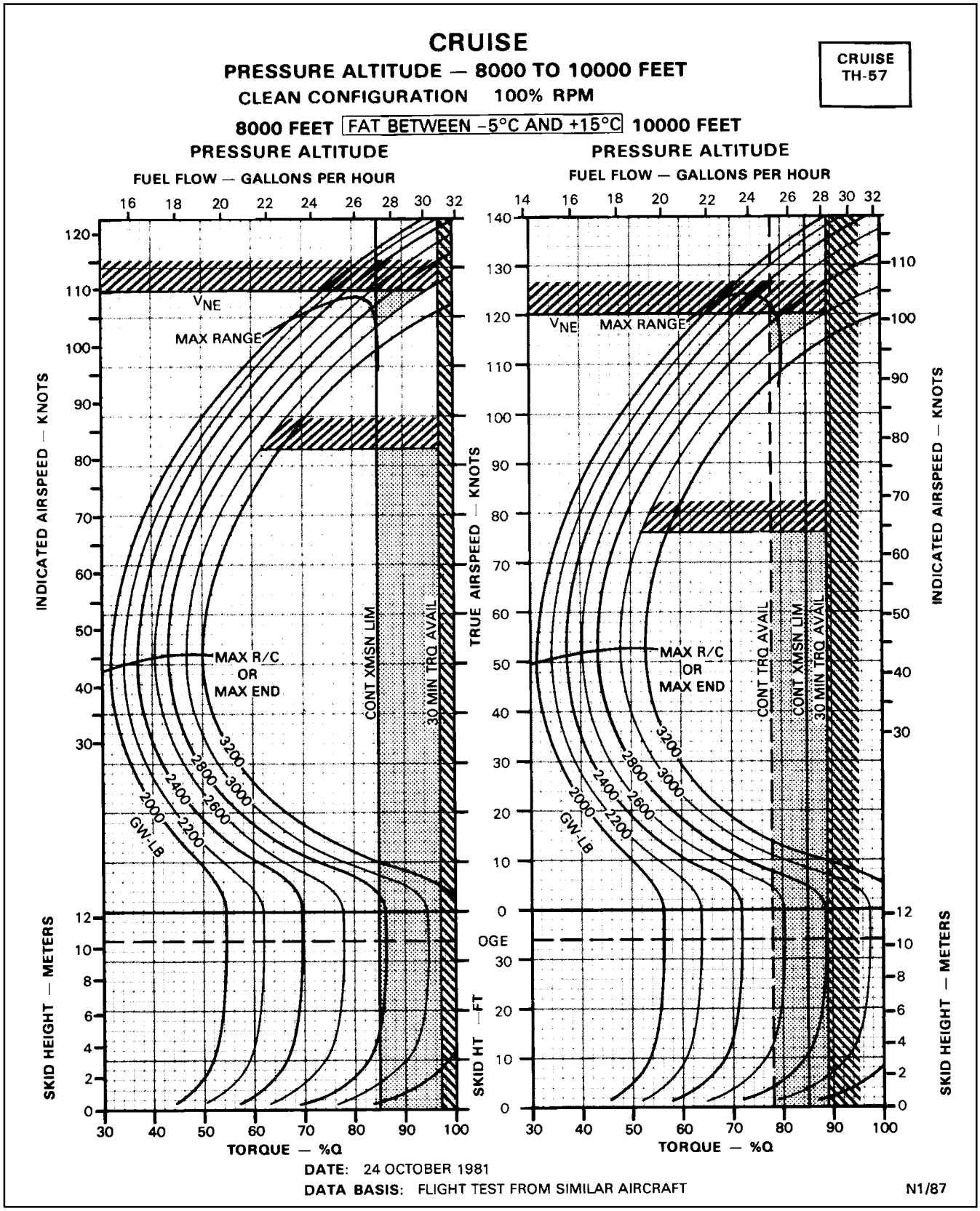

Figure 26-1. Cruise Chart (Sheet 10)

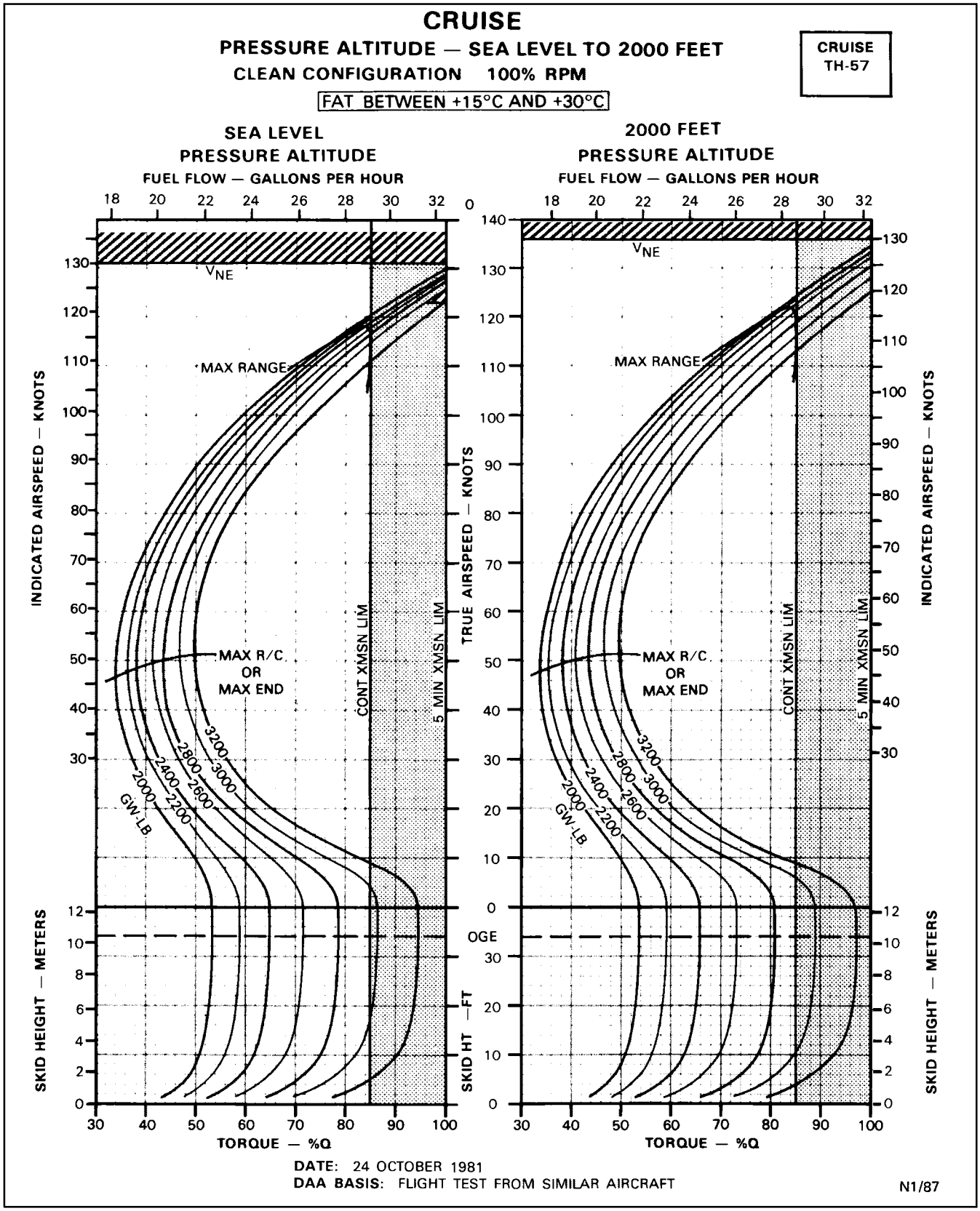

Figure 26-1. Cruise Chart (Sheet 11)

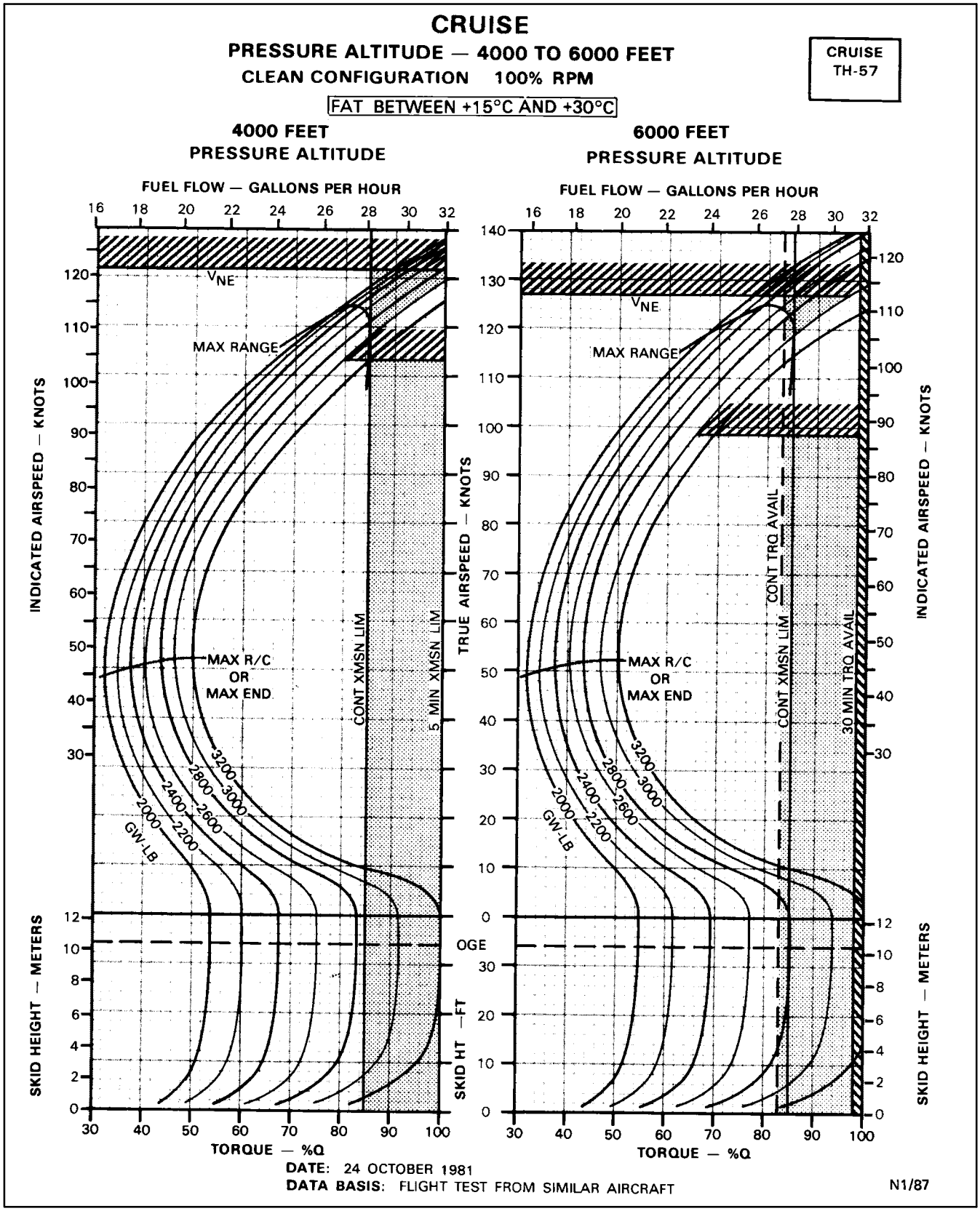

Figure 26-1. Cruise Chart (Sheet 12)

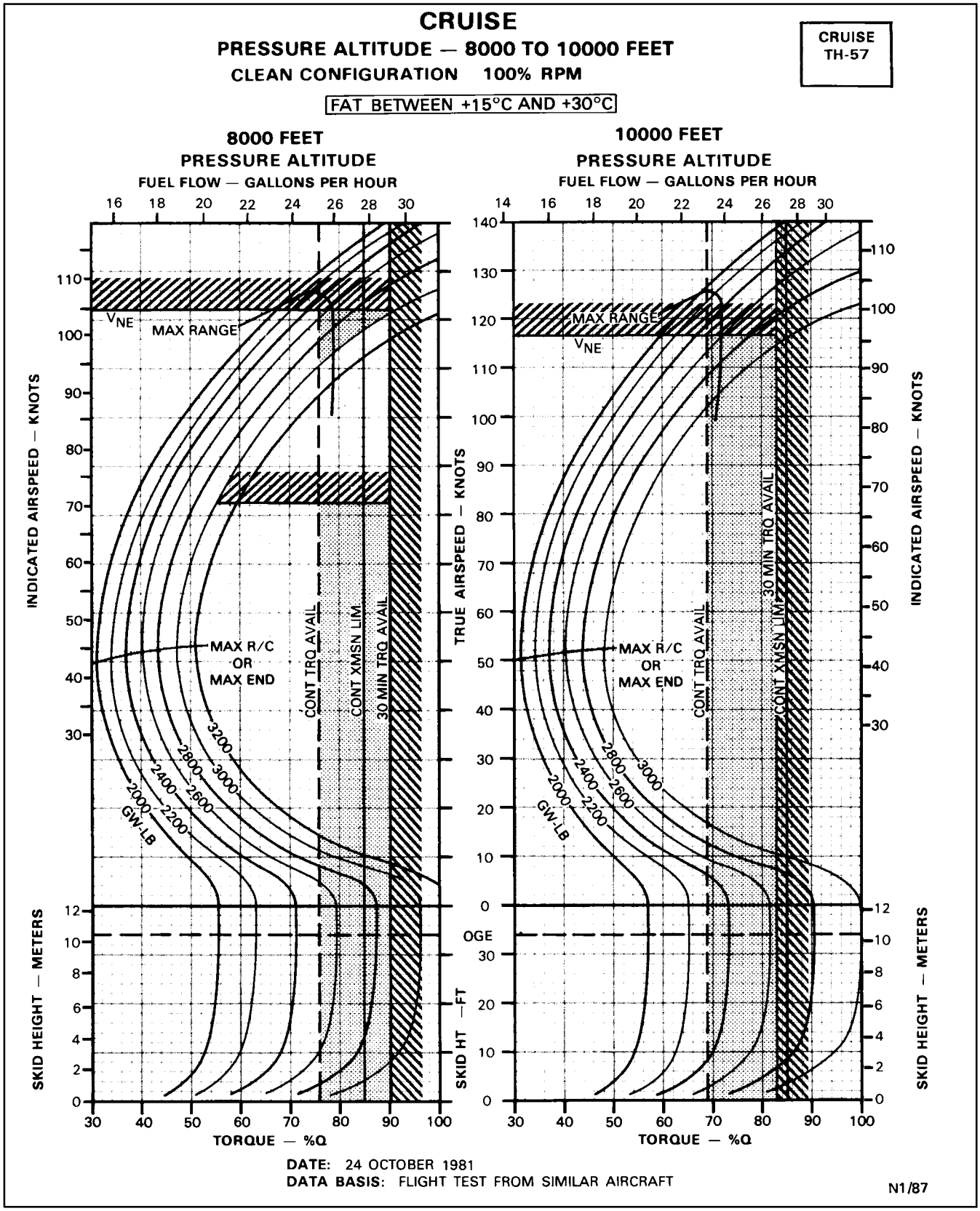

Figure 26-1. Cruise Chart (Sheet 13)

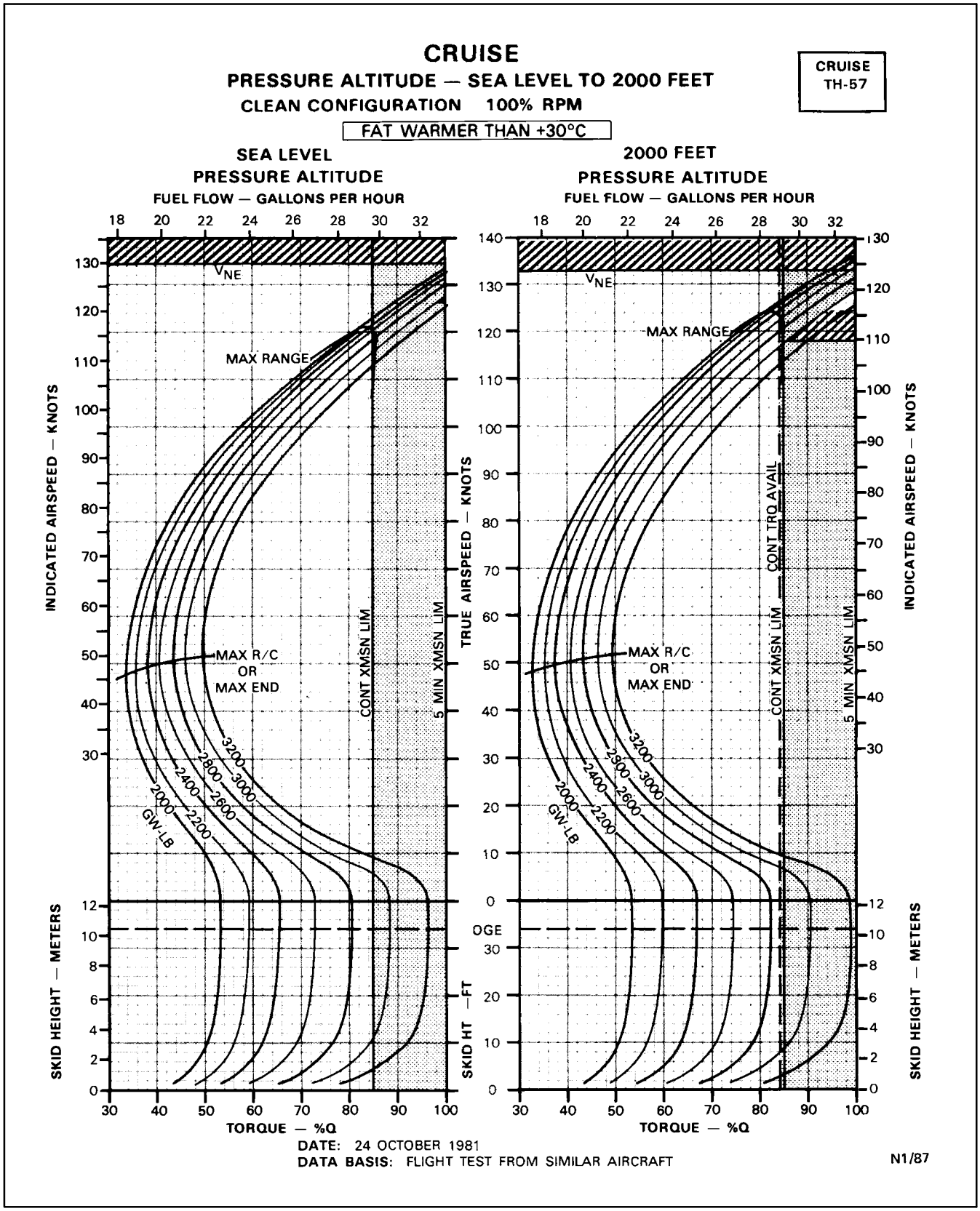

Figure 26-1. Cruise Chart (Sheet 14)

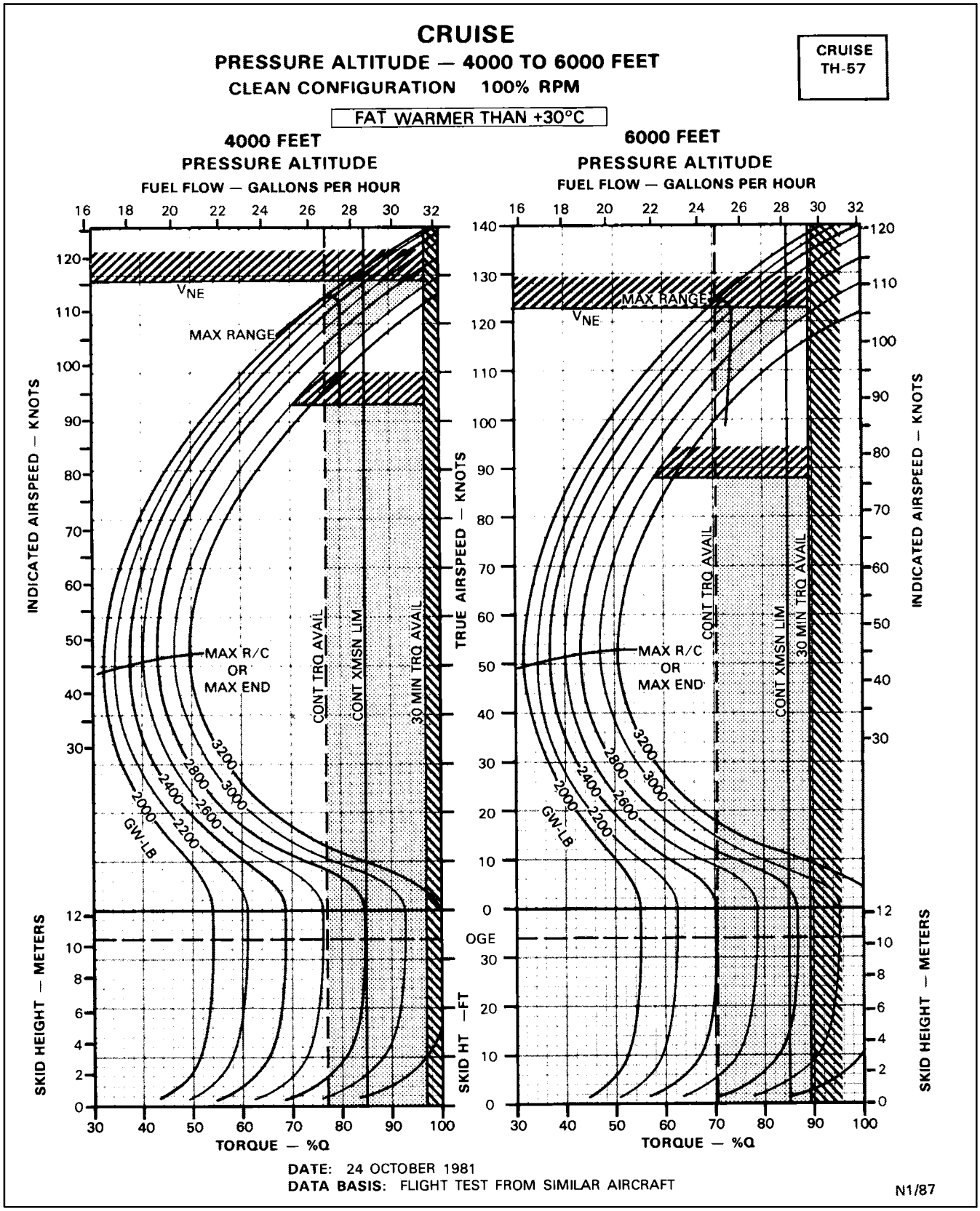

Figure 26-1. Cruise Chart (Sheet 15)

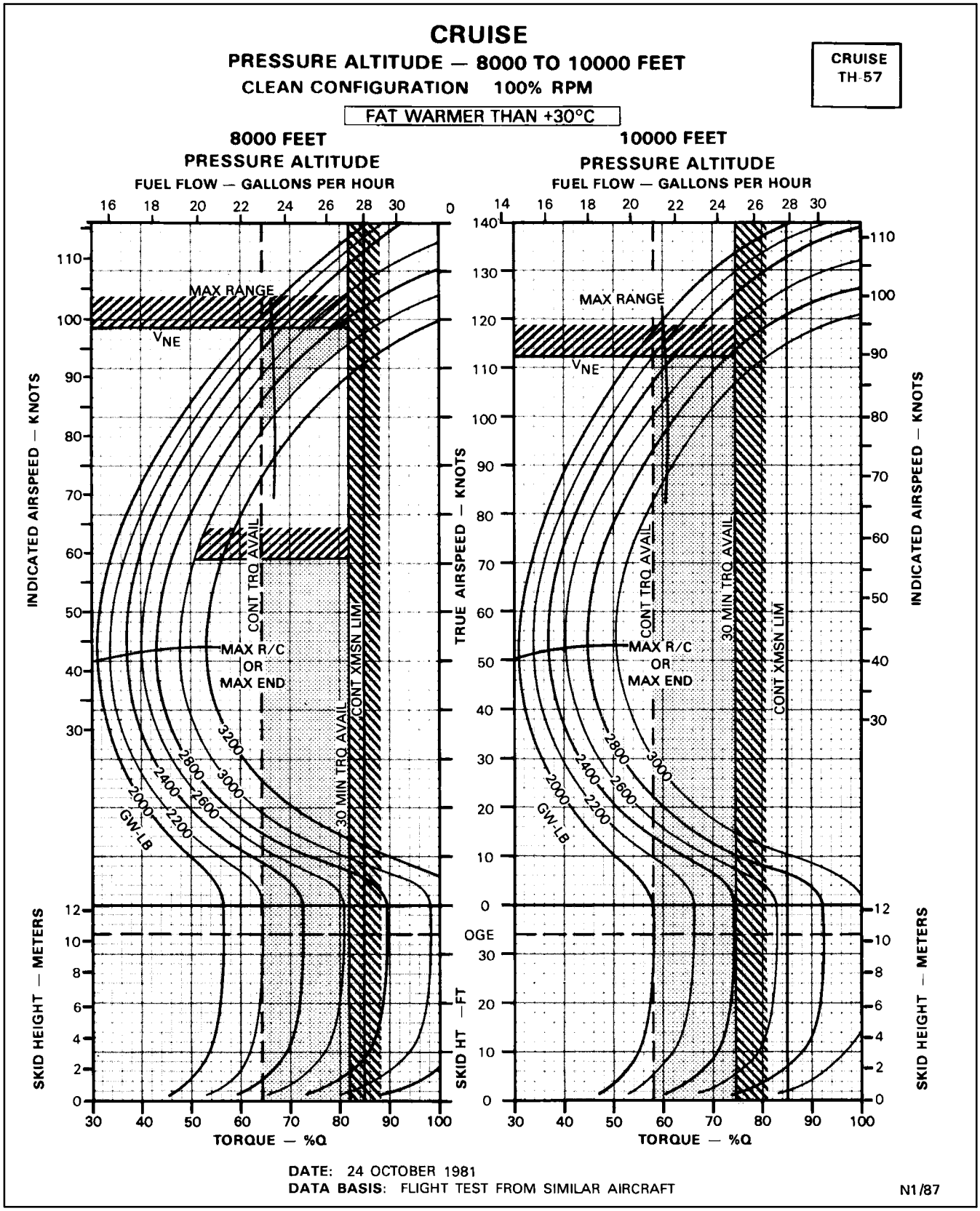

Figure 26-1. Cruise Chart (Sheet 16)

TIME & RANGE VS FUEL TH-57

EXAMPLE:

TIME AND RANGE VS FUEL

WANTED
TIME ENROUTE AND RANGE COVERED
KNOWN
60 GALLONS OF FUEL CONSUMED AT A RATE OF 24 GAL/HR WHILE CRUISING AT A TRUE AIRSPEED OF 100 KTAS
METHOD
ENTER GALLONS OF FUEL HERE●, MOVE RIGHT TO 24 GAL/HR FUEL FLOW, DROP DOWN TO THE TIME SCALE AND READ 150 MINUTES ENROUTE TIME, MOVE DOWN TO 100 KTAS, MOVE LEFT AND READ 250 NAUTICAL MILES RANGE.

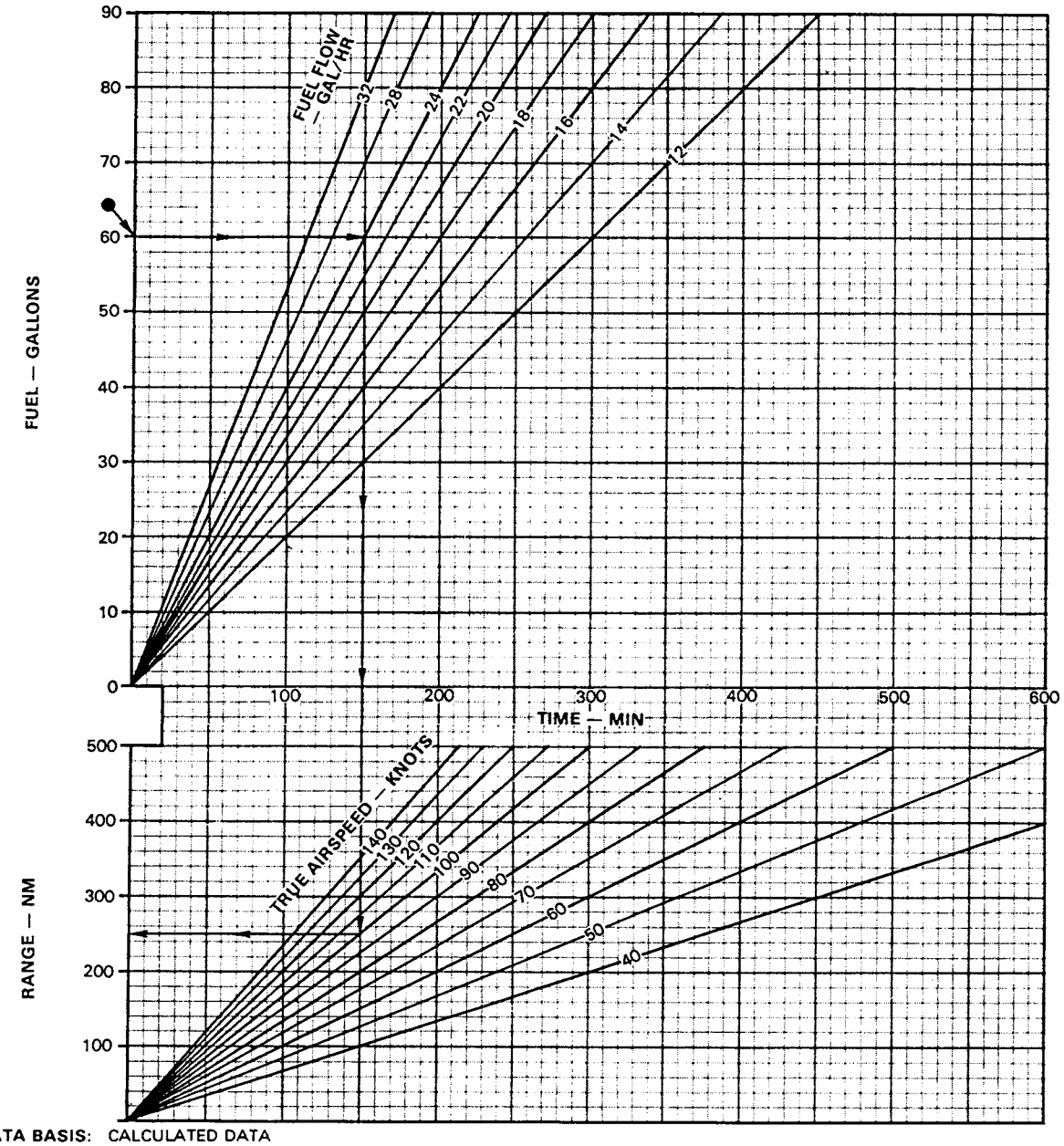

DATA BASIS: CALCULATED DATA
DATE: 24 OCT 1981

Figure 26-2. Time and Range vs. Fuel Chart

CHAPTER 27

Endurance

27.1 HOVERING ENDURANCE CHART

The hover endurance chart (Figure 27-1) is shown for out–of–ground effect at pressure altitudes of sea level, 4,000 feet, 8,000 feet, 10,000 feet, and 12,000 feet for various gross weights and outside air temperatures. Hover endurance can be determined if gross weight and fuel loading are known.

HOVERING ENDURANCE

HOVERING ENDURANCE TH-57

ALL CONFIGURATIONS OUT OF GROUND EFFECT 100% ENGINE RPM

EXAMPLE:

WANTED:
FUEL FLOW AND ENDURANCE
KNOWN
HOVERING OGE AT 4000 FEET, -20°C, GW = 2820 LB, 52 GAL OF FUEL
METHOD
ENTER FIGURE HERE●; MOVE RIGHT TO 4000 FEET PRESSURE ALTITUDE; DROP DOWN TO FAT BASELINE; MOVE DOWN, FOLLOWING THE TREND OF THE GUIDELINES, TO -20°C FAT; MOVE DOWN AND READ 26 GAL/HR; DIVIDE GAL OF FUEL BY FUEL FLOW TO CALCULATE HOVER ENDURANCE (52 ÷ 26) = 2 HOURS)

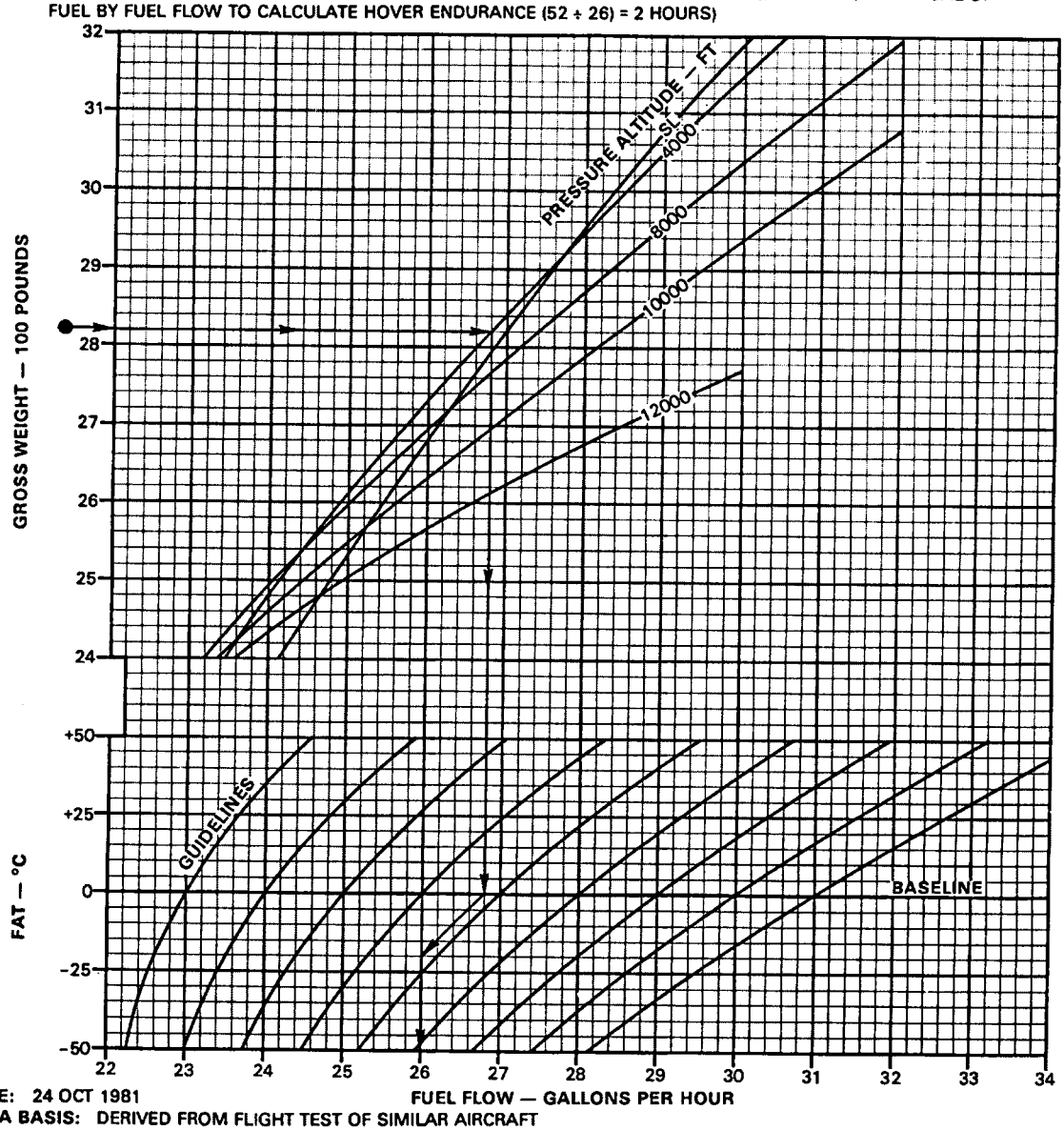

DATE: 24 OCT 1981
DATA BASIS: DERIVED FROM FLIGHT TEST OF SIMILAR AIRCRAFT

N1/87

Figure 27-1. Hover Endurance Chart

CHAPTER 28

Emergency Operation

28.1 AUTOROTATIONAL GLIDE CHARACTERISTIC CHART

The autorotational glide characteristic chart (Figure 28-1) presents power–off performance. Rpm tradeoff vs. indicated airspeed with rate of descent and glide ratio (horizontal distance/vertical distance) are shown. The glide ratio is 3.25 at 50 KIAS (the airspeed for maximum time to descend) and the minimum rate of descent is 1,558 fpm. The airspeed for maximum glide distance is 72 KIAS and the glide ratio is 4.08 with a rate of descent of 1,780 fpm. The above data is all for 90 percent rotor rpm; lower rpm shows less rate of descent and higher glide ratios, but care must be taken to keep rotor energy sufficient for flare and landing.

28.2 GLIDE DISTANCE CHART

The minimum rate of descent and the maximum glide distance (power off) may be obtained from Figure 28-2. The power–off minimum rate of descent is attained at an indicated airspeed of approximately 50 knots and 90 percent rotor rpm. The maximum glide distance is attained at an indicated airspeed of approximately 72 knots and 90 percent rotor rpm.

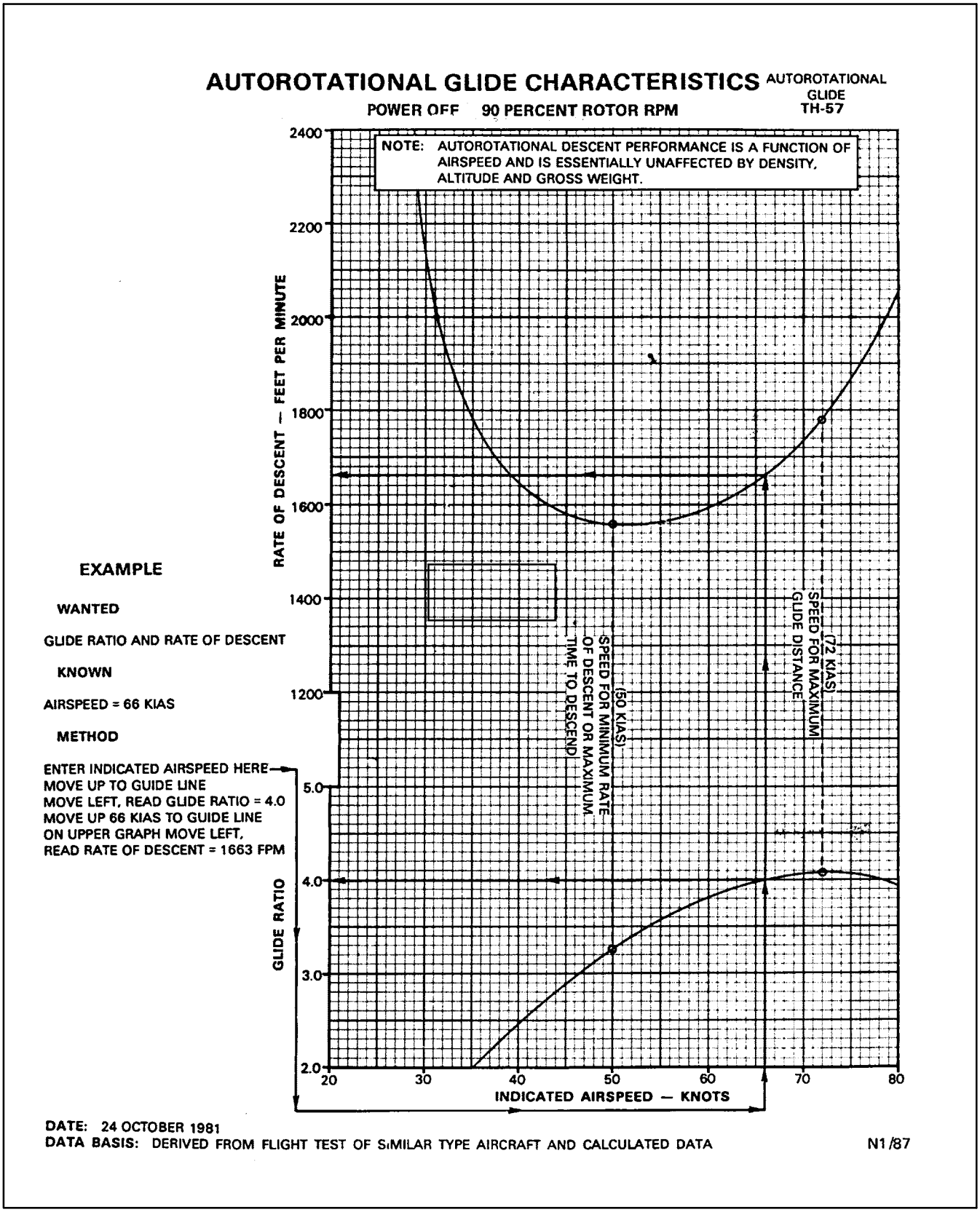

Figure 28-1. Autorotational Glide Characteristic Chart

GLIDE DISTANCE
POWER OFF 90 PERCENT ROTOR RPM

GLIDE
TH-57

EXAMPLE

WANTED

MINIMUM RATE OF DESCENT
AND MAXIMUM GLIDE DISTANCE

KNOWN

PRESSURE ALTITUDE = 10000 FEET

METHOD

ENTER ALTITUDE HERE
MOVE RIGHT TO MINIMUM R/D
MOVE DOWN, READ DISTANCE
FOR MINIMUM R/D = 5.3 NM
RE-ENTER ALTITUDE HERE
MOVE RIGHT TO MAXIMUM
DISTANCE LINE
MOVE DOWN, READ MAXIMUM
GLIDE DISTANCE = 6.7 NM

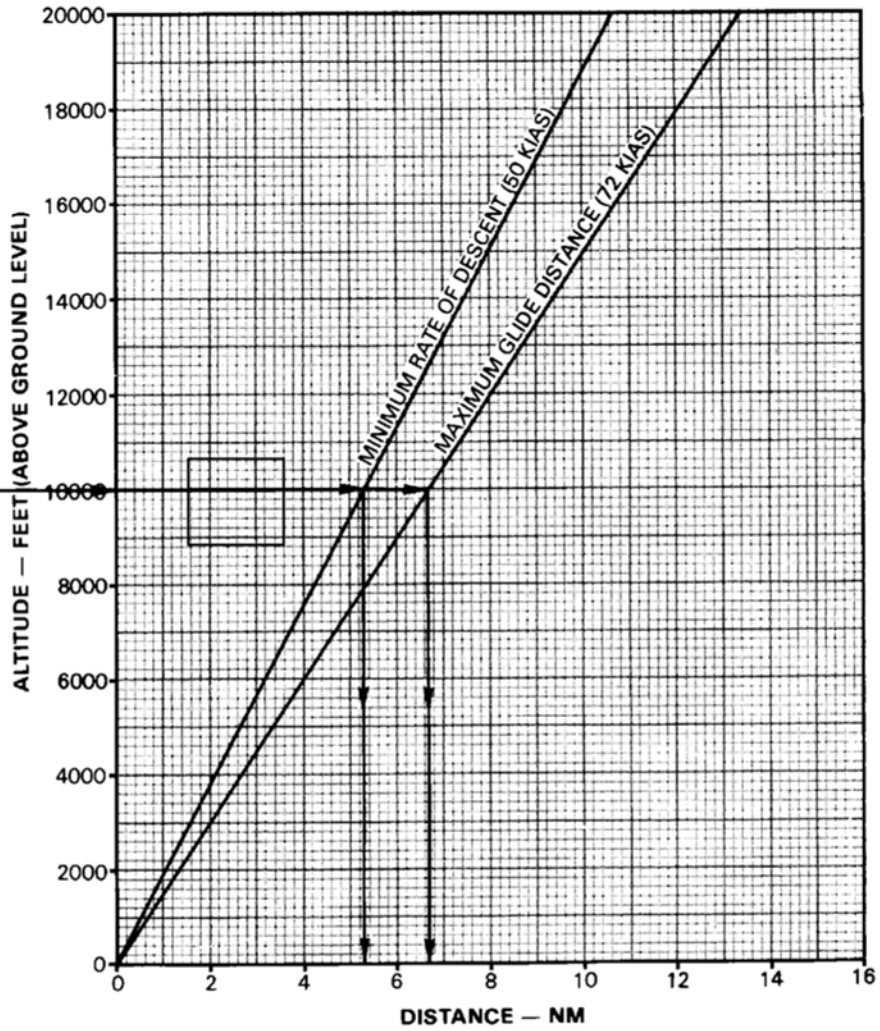

DATE: 24 OCTOBER 1981
DATA BASIS: DERIVED FROM FLIGHT TEST OF SIMILAR TYPE AIRCRAFT

N1/87

Figure 28-2. Glide Distance Chart

CHAPTER 29

Special Charts

29.1 RADIUS OF TURN AT CONSTANT AIRSPEED CHART

Figure 29-1 presents turn performance. The g factor (normal load) or the apparent gross weight over the actual gross weight of the helicopter equals 1/cosine bank angle. The turn radius in feet for a steady–state constant speed turn is V^2/g tangent bank angle where V is velocity in fps and g is 32.2 fps^2. The tradeoffs of airspeed, load factor, and bank angle are shown by the figure, and care must be taken when maneuvering near the ground because a 60° bank angle can double the equivalent gross weight of the helicopter; by checking the cruise charts for torque required and available, a better understanding of turn capability may be acquired.

29.2 WIND COMPONENT CHART

Figure 29-2 may be used to obtain a wind component for various crosswind components and crosswind direction or azimuth.

29.3 AIRSPEED OPERATING LIMITS CHART

Refer to Figure 29-3 for forward airspeed limits. Sideward flight limit is 25 knots. Rearward flight limit is 15 knots. Autorotation flight limit is 100 KIAS. With any doors removed, flight limit is 110 KIAS.

29.4 DRAG CHART

The drag chart (Figure 29-4) shows the torque change required for flight because of drag area change as a result of external configuration changes. Note that the figure shows drag area change because of specific configurations.

The primary use of the chart is illustrated by the example. To determine the change in torque, it is necessary to know the drag area change, the true airspeed, the pressure altitude, and the free air temperature. Enter at the known drag area change, move right to TAS, move down to pressure altitude, move left to FAT, then move down and read change in torque. In addition, by entering the chart in the opposite direction, drag area change may be found from a known torque change.

This chart is used to adjust cruise charts (Figure 26-1) for appropriate torque and fuel flow because of equivalent flat plate drag area change (Δ F). The drag chart is based upon 100 percent rpm.

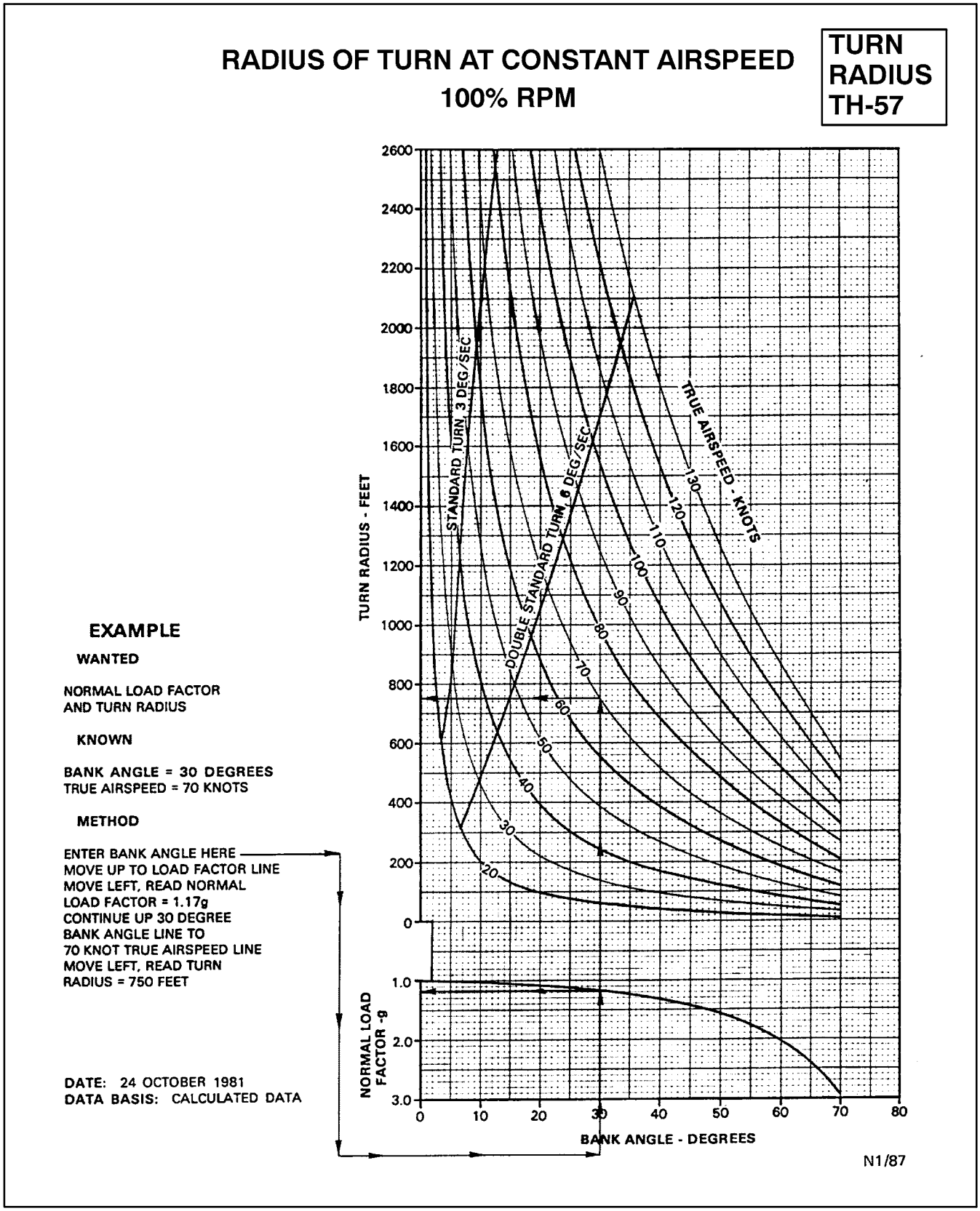

Figure 29-1. Radius of Turn at Constant Airspeed Chart

WIND COMPONENT

WIND COMPONENT TH–57

EXAMPLE

WANTED

WIND COMPONENT

KNOWN

WIND VELOCITY = 15 KNOTS, WIND DIRECTION (RELATIVE TO HEADING) = 60°

METHOD

FIND INTERSECTION OF WIND VELOCITY (15 KNOTS) AND WIND DIRECTION (60°) MOVE LEFT, READ WIND COMPONENT = 7.5 KNOTS

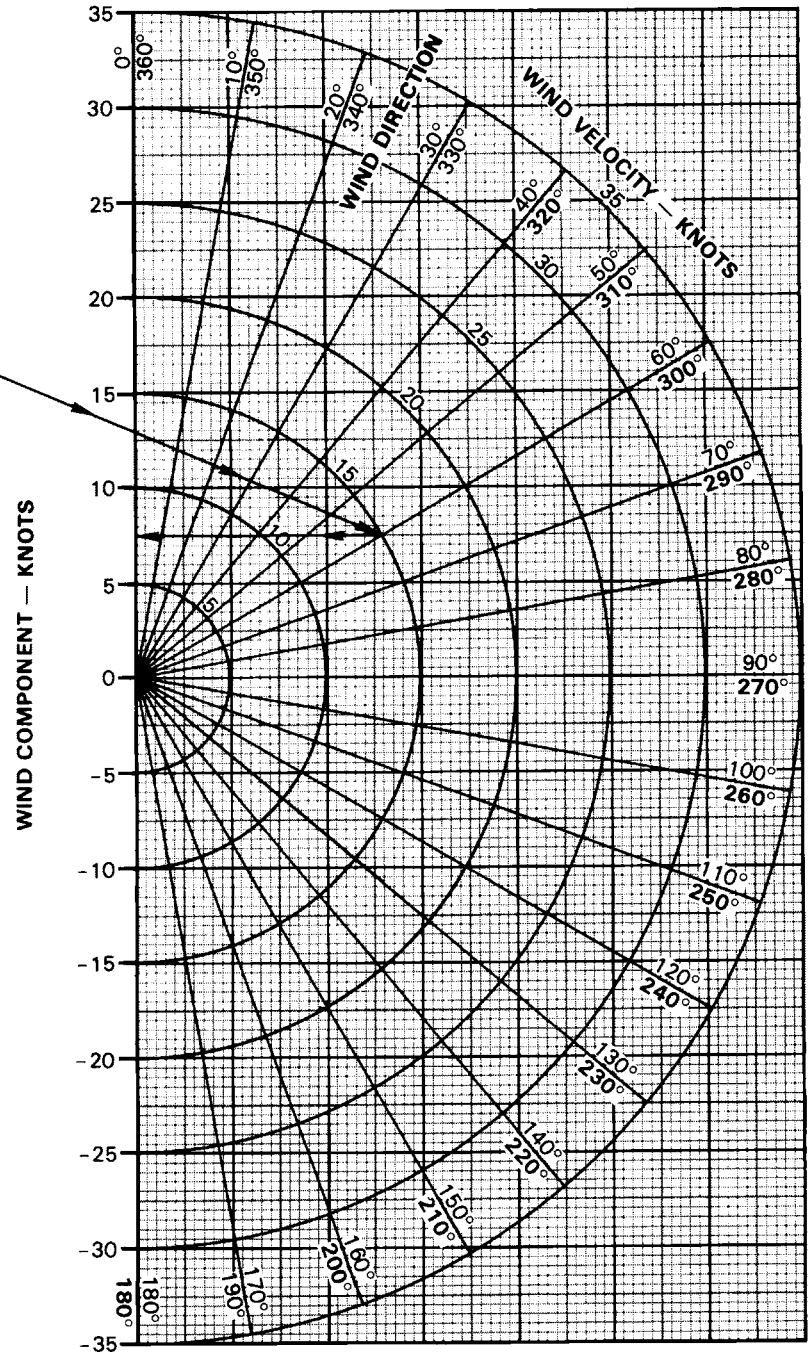

N1/87

Figure 29-2. Wind Component Chart

AIRSPEED OPERATING LIMITS

ALL CONFIGURATIONS

100% N_2 RPM

AIRSPEED OPERATING LIMITS TH-57

EXAMPLE

WANTED

MAXIMUM INDICATED AIRSPEED

KNOWN

GROSS WEIGHT = 3050 LB
PRESSURE ALTITUDE = 9500 FEET
FAT = -20°C

METHOD

ENTER PRESSURE ALTITUDE HERE
MOVE RIGHT TO FAT
MOVE DOWN TO APPROPRIATE GROSS WEIGHT LINE
MOVE LEFT, READ MAXIMUM INDICATED AIRSPEED = **90 KNOTS**

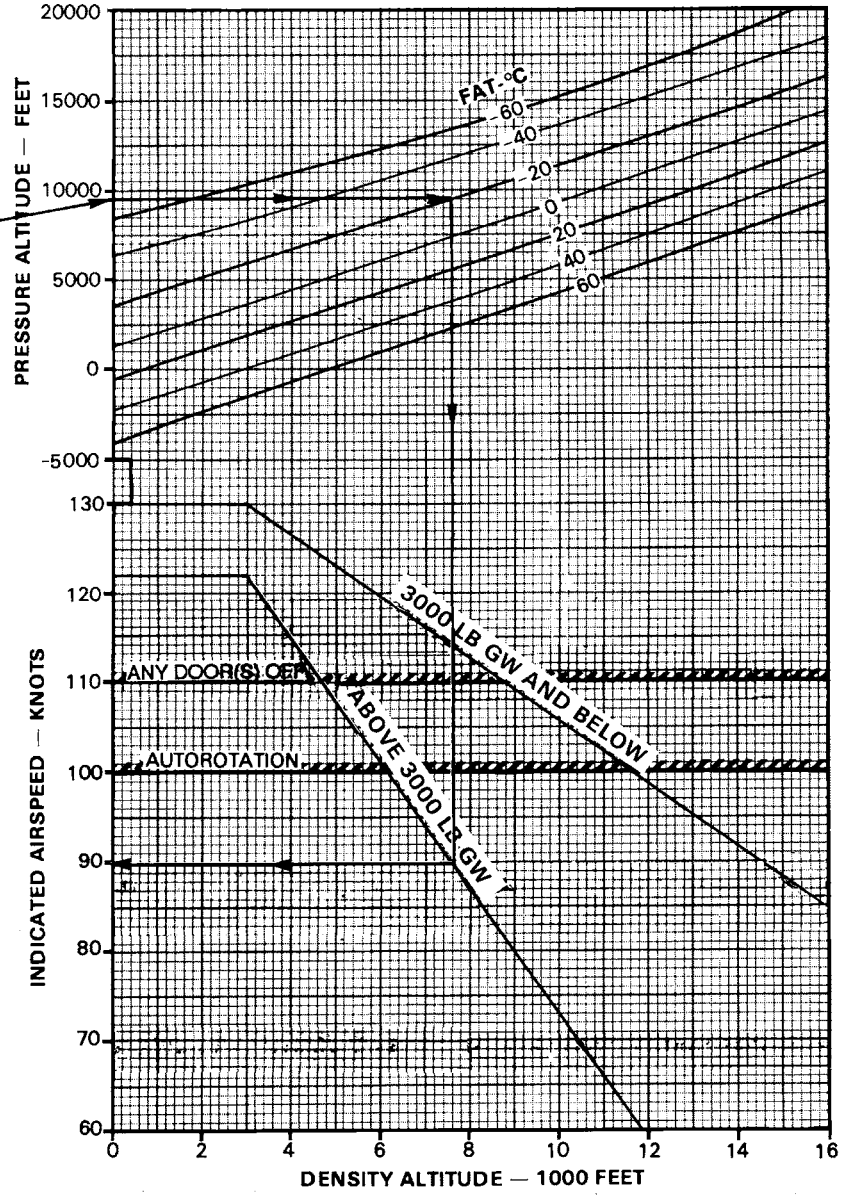

DATA: 24 OCTOBER 1981
DATA BASIS: DERIVED FROM BELL HELICOPTER TEXTRON FLIGHT TEST

N5/92

Figure 29-3. Airspeed Operating Limits Chart

DRAG

DRAG
TH-57

EXAMPLE

WANTED

CHANGE IN TORQUE REQUIRED
DUE TO EQUIVALENT FLAT PLATE DRAG AREA
CHANGE, (ΔF) FROM POPOUT FLOATS
CONFIGURATION

KNOWN

DRAG AREA CHANGE = 1.0 SQ FT
TRUE AIRSPEED = 120 KNOTS
PRESSURE ALTITUDE = SEA LEVEL
FAT = 0°C

METHOD

ENTER DRAG AREA CHANGE HERE
MOVE RIGHT TO TRUE AIRSPEED
MOVE DOWN TO PRESSURE ALTITUDE
MOVE LEFT TO FAT
MOVE DOWN, READ CHANGE IN TORQUE = 6%Q

DATE: 24 OCTOBER 1981
DATA BASIS: CALCULATED DATA

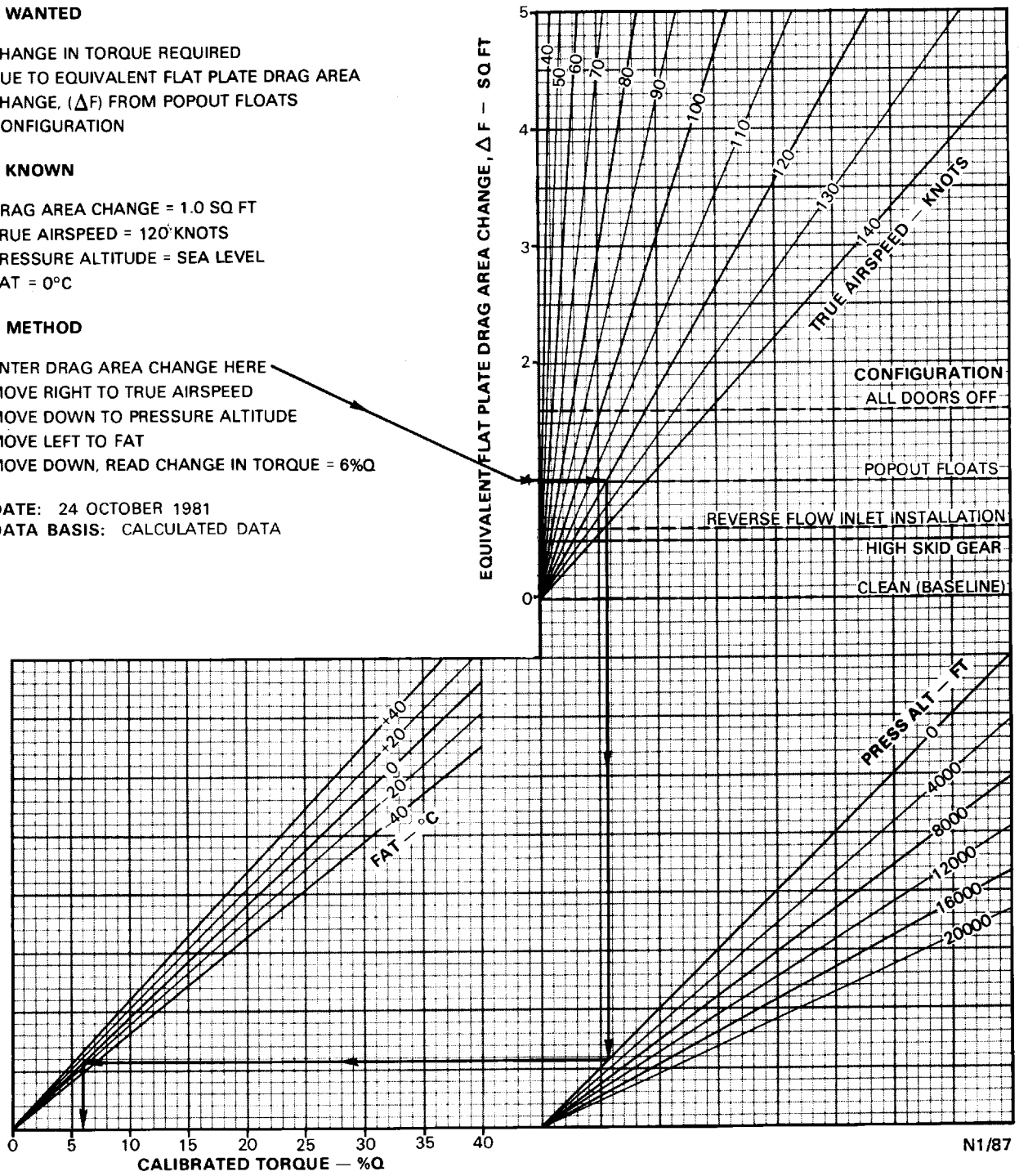

Figure 29-4. Drag Chart

INDEX

Page No.

A

Abort start 13-1

Acceleration limits 4-9

Acceptance sheets 7-1

Accumulators 2-4

ADF (KR-87) (C) 18-11
- Controls and functions 18-13
- Operation 18-13

Adverse weather conditions 17-11

AFCS controller 2-31

Aft fuselage (left side) 7-9

Aft fuselage (right side) 7-7

After engine/rotor start 17-2

Air data computer 2-35

Air taxi 9-5

Air taxiing 7-22

Air-capable ship operations 8-5
- Field deck landing practice 8-5
- Launch procedures 8-5
- Recovery procedures 8-10
- Relative winds 8-5

Air-capable ship qualification 8-1

Aircraft 7-2
- Aircraft lighting 18-21
- Aircraft variation 22-2
- Securing the aircraft 8-3

Aircraft lighting 18-21

Aircraft variation 22-2

Aircrew authority positions 20-6
- Copilot 20-6
- Flight leader 20-6
- Observer 20-7
- Pilot in command 20-6

Aircrew flight training 5-2

Aircrew ground training 5-1

Aircrew operational positions 20-7
- Flying pilot 20-7
- Monitoring pilot 20-7

Aircrewman 5-3, 20-6

Airframe-mounted fuel filter 2-17

Airframe-mounted oil filter system 2-13

Airspeed 26-1

Airspeed calibration chart 23-1

Airspeed indicator 2-36

Airspeed limits 4-8

Airspeed operating limits chart 29-1

All flights 5-6

All phases of instrument flight 20-9

Altimeters 2-36

Altitude 6-1

Altitude limitations 4-8

Annual flying and currency requirements 5-6

Antennas 18-2

Anticollision lights 2-44

Approach:
- High-speed approach 9-8
- Normal approach 7-23
- Overhead approach 9-8
- Steep approach 7-25

Approach & landing 20-10

Approaches:
- Instrument approaches 17-4
- Tactical approaches 9-8
- Types of approaches 7-23

Area 21-2
- Confined area landing 7-26
- Confined area landings 20-11
- Confined area takeoff 7-21
- Upper fuselage area 7-10

Ashtrays 2-49

Assignment requirements 5-3

Attaching wire clamp 3-1

Page No.

Audio-mute switch 2-44

Authority:
- Aircrew authority positions 20-6
- Designating authority 5-2
- Loss of tail rotor authority 11-10

Automation pyramid 20-5

Autorotation 15-1
- Landing in the trees 15-2

Autorotational glide characteristic chart 28-1

Avionics and automation management 20-5

Avionics inverter failure (C) 14-14

B

Basic formations 9-5
- Crossovers 9-6
- Lead changes 9-6
- Parade formation 9-6
- Tactical formations 9-6

Battery 2-25
- Standby battery (C) 2-26

Battery overtemperature indicator system 2-26

Battery switch 2-25

Before starting engine 17-6

Brief:
- NVD crew brief 9-10
- Observer brief (brief when observer does not attend full NATOPS brief) 6-6

Briefing 6-2, 8-2
- Cockpit crew coordination 6-5
- Conduct of flight 6-4
- Emergencies 6-5
- NVD briefing guide 9-10
- Observer brief (brief when observer does not attend full NATOPS brief) 6-6
- Special instructions 6-5
- Weather 6-5

Bright/dim switch 2-42

Page No.

C

Cabin cooling 7-27

Cabin defogging 7-27

Cabin heat 7-27

Cabin lights 2-46

Calculated data 22-2

Carrier-type rendezvous 9-8

Caution panel 2-40
- Bright/dim switch 2-42
- Test switch 2-42

Characteristic, Autorotational glide characteristic chart 28-1

Characteristics:
- Dynamic rollover characteristics 11-4
- Level flight characteristics at various speeds 11-1

Chart:
- Airspeed calibration chart 23-1
- Airspeed operating limits chart 29-1
- Autorotational glide characteristic chart 28-1
- Climb-descent chart 25-1
- Density altitude chart 23-1
- Drag chart 29-1
- Fuel flow chart 23-1
- Glide distance chart 28-1
- Hovering endurance chart 27-1
- Radius of turn at constant airspeed chart 29-1
- Shaft horsepower vs. torque chart 23-1
- Takeoff chart 24-1
- Temperature conversion chart 23-1
- Time and range vs. fuel chart 26-1
- Wind component chart 29-1

Charts:
- Climb performance charts 25-1
- Cruise charts 26-1
- Hovering charts 24-1
- Service ceiling charts 25-5
- Torque available charts 23-1
- Use of charts 22-1

Check pilot qualification 10-1

Page No.

Checklist:
- Checklist procedures 20-7
- Hot refuel checklist 7-26
- Instrument flight checklist 7-22
- Landing checklist 7-26
- Level-off checklist 7-23, 17-3
- Post-refuel/hot seat checklist 7-26
- Shutdown checklist 7-28
- Takeoff checklist 7-20

Checklist procedures 20-7

Chip detector system 2-43

Chip detector warning lights 2-43

Circuit breaker panel 2-25

Climb 7-22
- Level-off checklist 7-23

Climb performance charts 25-1

Climb-descent chart 25-1
- Example 25-5

Climb/descent limits 4-9

Closed-book examination 21-2, 21-3

Cockpit 7-2

Cockpit crew coordination 6-5

Cockpit lights 2-46

Cold-weather operation 17-5
- Before starting engine 17-6
- Engine ground operation 17-6
- Engine servicing 17-5
- In flight 17-7
- Introduction 17-5
- Landing 17-8
- Preheating 17-6
- Preparation for flight 17-5
- Takeoff 17-7
- Taxi 17-8

Collective pitch control lever 2-30

Combat cruise 9-6

COMM radio operation 18-5

Command, Pilot in command 20-6

Communication, TH-57C communication system 18-3

Page No.

Communications:
- Communications and associated electronic equipment 18-1
- Communications procedures 5-4
- TH-57B communications and audio system 18-4
- TH-57C communications audio system 18-2
- Visual communications 18-21

Communications and associated electronic equipment 18-1
- Antennas 18-2
- Controls 18-1

Communications procedures 5-4

Compartment:
- Engine compartment (left side) 7-9
- Engine compartment (right side) 7-7

Compass heading system 2-36

Complete loss of tail rotor thrust 14-21

Component, Wind component chart 29-1

Compressor stall 14-2

Computer 2-32
- Air data computer 2-35

Concept 21-1

Conditionally qualified 21-1, 21-3

Conditions requiring functional checkflights 10-1

Conduct of flight 6-4

Confined area landing 7-26

Confined area landings 20-11

Confined area takeoff 7-21

Control:
- Collective pitch control lever 2-30
- Control feedback 11-10
- Control tube/actuator assemblies 2-32
- Cyclic pitch control stick 2-30
- Directional control pedals 2-30
- Environmental control system 2-46, 7-27
- Environmental control system malfunctions 14-28
- Flight control servo units 2-28
- Flight control system 2-28
- Fuel control 2-4
- Fuel control failure 14-6
- Hydraulic control switch 2-28

Page No.

Intercom control (C) 18-2
Jammed flight controls and other flight control malfunctions 14-19
Ministab flight control system (C) 2-31
Overspeed control 2-4
Receiver audio control panels (C) 18-3
Tail rotor failure and directional control malfunctions 14-20
Turbine power control 2-4

Control feedback 11-10

Control tube/actuator assemblies 2-32

Controller, AFCS controller 2-31

Controls 18-1
Jammed flight controls and other flight control malfunctions 14-19

Controls and function 2-40

Controls and functions 18-3, 18-4, 18-6, 18-9, 18-13, 18-14, 18-16, 18-20

Copilot 20-6

Course deviation indicator KDI-206 (C) 18-15
Controls and functions 18-16
Operation 18-16

Crash position 16-2

Crew:
Cockpit crew coordination 6-5
Minimum crew requirements 4-11
NVD crew brief 9-10

Crew and truck 3-1

Crew management 17-1
Duties of flying pilot 17-1
Duties of nonflying pilot 17-1

Crew resource management 20-3
Automation pyramid 20-5
Avionics and automation management 20-5
Seven CRM skills 20-3
Sterile cockpit 20-6
Workload management and task saturation 20-4

Crew/passengers 16-2

Criteria, Flight evaluation grading criteria 21-3

Page No.

Critical area/subarea 21-2

Crossovers 9-6

Crosswind landings and takeoffs 11-6

Crosswind takeoff 7-21

Cruise 7-23, 9-6

Cruise charts 26-1
Airspeed 26-1
Fuel flow 26-1
Maximum endurance and maximum rate of climb 26-1
Maximum range 26-1
Torque (percent Q) 26-1

Currency 5-6
Annual flying and currency requirements 5-6
Waivers 5-6

Current requirements 5-4

Cyclic pitch control stick 2-30

D

Data basis 22-2
Calculated data 22-2
Derived from flight test 22-2
Estimated data 22-2
Flight test data 22-2

Data cases 2-48

Dc external power start receptacle 2-26

Dc loadmeter 2-25

Dc loadmeter and voltmeter 14-15

Dc voltmeter (B) 2-25

Debriefing 6-6

Deck:
Field deck landing practice 8-5
Flight deck operations 8-4
Hangar and flight deck operations 8-3

Definition of landing terms 12-1

Definitions 21-1
Area 21-2
Conditionally qualified 21-1
Critical area/subarea 21-2
Emergency 21-2
Malfunction 21-2
NATOPS evaluation 21-1
NATOPS reevaluation 21-1
Qualified 21-1
Subarea 21-2
Unqualified 21-2

Page No.

Density altitude chart 23-1
Derived from flight test 22-2
Descent 7-23, 17-3
  Emergency descent 14-27
Description:
  System operational description 2-31
  TH-57B general description 2-20
  TH-57C general description 2-20
Desert operation 17-9
Designating authority 5-2
Designation 5-2, 5-4
Directional control pedals 2-30
Directives, Publications and related directives 5-4
Discrepancy reporting 7-2
Ditching 16-4
Ditching — power off 16-4
Ditching — power on 16-4
DME operation 18-10
DME/TACAN system (KTU-709) (C) 18-10
  DME operation 18-10
  TACAN operation 18-11
Door:
  TH-57B/C door emergency jettisoning handles 16-1
  TH-57B/C door handles 16-1
  Transmission access door (left side) 7-10
  Transmission access door (right side) 7-6
  Upper forward cowling access door (left side) 7-11
  Upper forward cowling access door (right side) 7-6
Drag chart 29-1
Drive train 2-13
  Engine to transmission drive 2-13
Dual tachometer 2-11
Duties:
  Duties of flying pilot 17-1
  Duties of nonflying pilot 17-1
Duties of flying pilot 17-1
Duties of nonflying pilot 17-1

Page No.

Dynamic rollover 11-4, 14-5
Dynamic rollover characteristics 11-4
  Crosswind landings and takeoffs 11-6
  Recovery procedure 11-6
  Slope landings and takeoffs 11-6

E

Effects of high altitude 17-10
Electrical fire 14-15
Electrical fire — known origin 14-16
Electrical fire — unknown origin 14-15
Electrical hazard 3-1
Electrical power system 2-20
  Battery 2-25
  Battery switch 2-25
  Circuit breaker panel 2-25
  Dc external power start receptacle 2-26
  Dc loadmeter 2-25
  Dc voltmeter (B) 2-25
  Inverters (C) 2-26
  Standby generator (C) 2-25
  Starter-generator system 2-25
  TH-57B general description 2-20
  TH-57C Ac and Dc voltmeter 2-25
  TH-57C general description 2-20
  Voltage regulator 2-20
Electronic:
  Communications and associated electronic equipment 18-1
Electronic equipment 17-3
Elements of a formation 9-5
Emergencies 6-5
Emergencies and system failures 20-7
Emergency 21-2
  Preparation for emergency landing 16-2
  TH-57B/C door emergency jettisoning handles 16-1
Emergency descent 14-27
Emergency egress 16-2
  Emergency ground egress 16-2
Emergency equipment 2-40
  Caution panel 2-40
  Chip detector system 2-43
  Chip detector warning lights 2-43
  Engine failure warning system 2-43
  Fire detector system 2-43
  Rotor rpm warning system 2-43

Page No.

Emergency exits and entrances 16-1
TH-57B/C door emergency jettisoning handles 16-1
TH-57B/C door handles 16-1

Emergency ground egress 16-2
Crew/passengers 16-2
Pilot/copilot 16-2

Emergency landing 16-2
Ditching 16-4
Emergency landing (crew/passengers) 16-3
Emergency landing (pilot/copilot) 16-3
Preparation for emergency landing 16-2
Underwater egress 16-5

Emergency landing (crew/passengers) 16-3

Emergency landing (pilot/copilot) 16-3

Emergency procedures 8-4

Emergency shutdown 13-1

En route and holding 20-10

Engine:
Before starting engine 17-6
Engine anti-icing system 2-1
Engine compartment (left side) 7-9
Engine compartment (right side) 7-7
Engine failure 14-1
Engine failure at high airspeed and low altitude 14-2
Engine failure in flight 14-2
Engine failure warning system 2-43
Engine fire in flight 14-9
Engine ground operation 17-6
Engine instruments and indicators 2-4
Engine limitations 4-1
Engine oil pressure 4-1
Engine oil pressure gauge 2-11
Engine oil temperature 4-2
Engine oil temperature gauge 2-11
Engine or transmission oil pressures 14-25
Engine or transmission oil temperatures 14-26
Engine overspeed (N_f) rotor rpm (N_r) 14-6
Engine restart in flight 14-6
Engine servicing 17-5
Engine to transmission drive 2-13
Servicing engine oil system 3-7
Simulated engine failures 9-5

Page No.

Engine anti-icing system 2-1

Engine compartment (left side) 7-9

Engine compartment (right side) 7-7

Engine failure 14-1
Engine failure in flight 14-2

Engine failure at high airspeed and low altitude 14-2

Engine failure in flight 14-2

Engine failure warning system 2-43

Engine fire in flight 14-9

Engine ground operation 17-6

Engine instruments and indicators 2-4
Dual tachometer 2-11
Gas-producer tachometer 2-11
Torquemeter 2-4
Turbine outlet temperature indicator 2-10

Engine limitations 4-1
Engine oil pressure 4-1
Engine oil temperature 4-2
N_f rpm 4-1
N_g rpm 4-1
Turbine outlet temperature 4-2

Engine oil pressure 4-1

Engine oil pressure gauge 2-11

Engine oil temperature 4-2

Engine oil temperature gauge 2-11

Engine or transmission oil pressures 14-25

Engine or transmission oil temperatures 14-26

Engine overspeed (N_f) rotor rpm (N_r) 14-6

Engine restart in flight 14-6

Engine servicing 17-5

Engine to transmission drive 2-13

Entrance/egress 2-48

Entry, Inadvertent entry into instrument meteorological conditions 14-27

Environmental control system 2-46, 7-27
Cabin cooling 7-27
Cabin defogging 7-27
Cabin heat 7-27

Environmental control system malfunctions 14-28
Heater malfunction 14-28

Page No.

Equipment:
Communications and associated electronic equipment 18-1
Electronic equipment 17-3
Emergency equipment 2-40
Lighting equipment 2-44
Miscellaneous equipment 2-48
Personal flying equipment 5-4, 5-6
Required equipment 17-1
Required equipment for IMC flight 4-11
Required equipment for night flight 4-12
Required equipment for over water and shipboard operations 4-12

Estimated data 22-2

Evaluation:
Flight evaluation 21-3
Flight evaluation grade determination 21-13
Flight evaluation grading criteria 21-3
Ground evaluation 21-2
Landing site evaluation 17-10
NATOPS evaluation 21-1
NATOPS evaluation forms 21-14
NATOPS evaluation question bank 21-13
NATOPS flight evaluation 5-4
OFT/WST procedures evaluation 21-3

Examination:
Closed-book examination 21-2, 21-3
Open-book examination 21-2, 21-3
Oral examination 21-2
Oral examination and OFT procedure check (if conducted) 21-3

Example 25-5

Exhaust duct cover 2-49

Extended overwater flights 5-6

Exterior inspection 7-2

Exterior lights 2-44
Anticollision lights 2-44
Landing light 2-45
Position lights 2-44
Searchlight 2-45

External loads 20-11

Extinguisher, Fire extinguisher 2-48

Extinguishers, Fire extinguishers and attendant 3-1

Page No.

F

Factors affecting helicopter performance 6-1
Altitude 6-1
Ground effect 6-2
Humidity 6-1
Temperature 6-1
Wind 6-2

Failure:
Avionics inverter failure (C) 14-14
Engine failure 14-1
Engine failure at high airspeed and low altitude 14-2
Engine failure in flight 14-2
Engine failure warning system 2-43
FCS inverter failure (C) 14-14
Fuel boost pump failure 14-10
Fuel control failure 14-6
Hydraulic system failure 14-17
ICS/radio selector panel failure 14-30
Imminent transmission failure 14-9
Inverter failure (C) 14-14
Main drive shaft failure 14-7
Main generator failure 14-12
Standby generator failure (C) 14-14
Tail rotor failure and directional control malfunctions 14-20

Failures:
Emergencies and system failures 20-7
Simulated engine failures 9-5

FCS inverter failure (C) 14-14

Field deck landing practice 8-5

Filter:
Airframe-mounted fuel filter 2-17
Airframe-mounted oil filter system 2-13

Final grade determination 21-13

Fire:
Electrical fire 14-15
Electrical fire — known origin 14-16
Electrical fire — unknown origin 14-15
Engine fire in flight 14-9
Fuselage fire 14-10
Post shutdown fire (internal) 13-2

Fire detector system 2-43

Fire extinguisher 2-48

Fire extinguishers and attendant 3-1

Page No.

Fireguard 7-1

First-aid kits 2-48

Five-step ORM process 20-2

Fixed pitch left pedal (high power) 14-23

Fixed pitch right pedal (low power) 14-22

Flight:
- Aircrew flight training 5-2
- All phases of instrument flight 20-9
- Conduct of flight 6-4
- Derived from flight test 22-2
- Engine failure in flight 14-2
- Engine fire in flight 14-9
- Engine restart in flight 14-6
- Flight checks 10-13
- Flight control servo units 2-28
- Flight control system 2-28
- Flight deck operations 8-4
- Flight evaluation 21-3
- Flight evaluation grade determination 21-13
- Flight evaluation grading criteria 21-3
- Flight leader 20-6
- Flight test data 22-2
- Flight training syllabus 5-1
- Formation flight 9-5
- Ground training syllabus (flight line training) 5-5
- Hangar and flight deck operations 8-3
- In flight 17-7
- Instrument cruise flight 17-3
- Instrument flight checklist 7-22
- Instrument flight procedures 17-1
- Jammed flight controls and other flight control malfunctions 14-19
- Level flight characteristics at various speeds 11-1
- Maneuvering flight 11-1
- Ministab flight control system (C) 2-31
- NATOPS flight evaluation 5-4
- Pilot flight training 5-2
- Preparation for flight 17-5, 17-9
- Required equipment for IMC flight 4-11
- Required equipment for night flight 4-12
- Simulated instrument flight 17-1
- Turbulent air flight techniques 17-10
- Uncommanded right roll during flight below 1g 14-19

Page No.

Flight checks 10-13

Flight control servo units 2-28

Flight control system 2-28
- Collective pitch control lever 2-30
- Cyclic pitch control stick 2-30
- Directional control pedals 2-30
- Force trim system 2-31

Flight deck operations 8-4

Flight evaluation 21-3
- Flight evaluation grade determination 21-13
- Flight evaluation grading criteria 21-3

Flight evaluation grade determination 21-13

Flight evaluation grading criteria 21-3
- Conditionally qualified 21-3
- Qualified 21-3
- Unqualified 21-3

Flight leader 20-6

Flight test data 22-2

Flight training syllabus 5-1
- Aircrew flight training 5-2
- Pilot flight training 5-2

Flightcrew designation, qualifications, and requirements 5-2
- Currency 5-6
- Designating authority 5-2
- Designation 5-2
- Qualifications 5-2

Flying:
- Annual flying and currency requirements 5-6
- Duties of flying pilot 17-1
- Flying pilot 20-7
- Mountain and rough terrain flying 17-9
- Personal flying equipment 5-4, 5-6

Flying pilot 20-7

Force trim system 2-31

Formation flight 9-5
- Basic formations 9-5
- Elements of a formation 9-5
- Formation takeoffs and landings 9-8
- Introduction 9-5
- Rendezvous 9-8
- Responsibilities 9-8

Formation flights 20-11

Formation takeoffs and landings 9-8

Page No.

Forms, NATOPS evaluation forms 21-14
Forward fuselage (left side) 7-11
Forward fuselage (right side) 7-6
Four helicopters 14-28
Four ORM principles 20-2
Free air temperature bulb 2-44
Freewheeling unit 2-13
Fuel 6-2
  Airframe-mounted fuel filter 2-17
  Fuel boost pump failure 14-10
  Fuel control 2-4
  Fuel control failure 14-6
  Fuel flow 26-1
  Fuel flow chart 23-1
  Fuel pressure (indicated) 4-7
  Fuel pressure indicator 2-20
  Fuel pump caution light 2-20
  Fuel quantity indicator 2-17, 14-26
  Fuel supply system 2-17
  Suspected fuel leakage 14-11
  Time and range vs. fuel chart 26-1
Fuel boost pump failure 14-10
Fuel control 2-4
Fuel control failure 14-6
Fuel flow 26-1
Fuel flow chart 23-1
Fuel pressure (indicated) 4-7
Fuel pressure indicator 2-20
Fuel pump caution light 2-20
Fuel quantity indicator 2-17, 14-26
Fuel supply system 2-17
  Airframe-mounted fuel filter 2-17
  Fuel pressure indicator 2-20
  Fuel pump caution light 2-20
  Fuel quantity indicator 2-17
Fueling and servicing 3-1
  Attaching wire clamp 3-1
  Crew and truck 3-1
  Electrical hazard 3-1
  Fire extinguishers and attendant 3-1
  Grounding 3-1
  Installation and removal of ground handling wheels 3-5
  Maintenance step 3-5
  Static differential 3-1
Full autorotation 9-2
Function:
  Controls and function 2-40
Function selector 18-7
Functional checkflight pilot 5-3
Functional checkflights 20-11
Fuselage (front section) 7-12
Fuselage fire 14-10

G

Gas-producer tachometer 2-11
Gauge:
  Engine oil pressure gauge 2-11
  Engine oil temperature gauge 2-11
  Transmission oil pressure gauge 2-16
  Transmission oil temperature gauge 2-16
General 9-9, 10-1, 22-1
  Check pilot qualification 10-1
  Conditions requiring functional checkflights 10-1
General conditions 22-2
  Aircraft variation 22-2
  Instrument variation 22-2
  Pilot technique 22-2
  Rigging 22-2
General CRM procedures 20-7
  Checklist procedures 20-7
  Emergencies and system failures 20-7
  Spatial disorientation 20-8
General precautions 6-2
Generator:
  Main generator failure 14-12
  Standby generator (C) 2-25
  Standby generator failure (C) 14-14
  Standby generator limitations (C) 4-7
Glide distance chart 28-1

Page No.

Grading instructions 21-3
Closed-book examination 21-3
Open-book examination 21-3
Oral examination and OFT procedure check (if conducted) 21-3

Ground:
Aircrew ground training 5-1
Emergency ground egress 16-2
Engine ground operation 17-6
Ground handling wheels 2-49
Ground operations 7-1
Ground training 5-4
Ground training syllabus 5-1
Ground training syllabus (flight line training) 5-5
Installation and removal of ground handling wheels 3-5
Pilot ground training 5-1

Ground effect 6-2

Ground evaluation 21-2
Closed-book examination 21-2
Grading instructions 21-3
OFT/WST procedures evaluation 21-3
Open-book examination 21-2
Oral examination 21-2

Ground handling wheels 2-49

Ground operations 7-1
Fireguard 7-1
Helicopter acceptance 7-1
Preflight inspection 7-1

Ground training 5-4

Ground training syllabus 5-1
Aircrew ground training 5-1
Pilot ground training 5-1

Ground training syllabus (flight line training) 5-5

Ground-to-air signals 18-21

Groundchecks 10-3

Grounding 3-1

Guide, NVD briefing guide 9-10

Gyro instruments 14-26

Page No.

H

Handles:
TH-57B/C door emergency jettisoning handles 16-1
TH-57B/C door handles 16-1

Handling:
Ground handling wheels 2-49
Installation and removal of ground handling wheels 3-5

Hangar and flight deck operations 8-3
Flight deck operations 8-4
Precautions in movement of helicopters 8-3
Preflight/postflight 8-4
Securing the aircraft 8-3

Hazard, Electrical hazard 3-1

Heater malfunction 14-28

Helicopter acceptance 7-1
Acceptance sheets 7-1
Hot seating procedures 7-2

Helicopter aircrew breathing device 16-6

Helicopter arrangement 1-1

High-frequency vibration 14-18

High-frequency vibrations 11-11

High-speed approach 9-8

Holding 17-3

Horizontal situation indicator KDI-525A (C) 18-20
Controls and functions 18-20
Operation 18-21

Horizontal stabilizer 2-35

Hot mike switch 18-4

Hot refuel checklist 7-26

Hot refueling/hot seating 7-26
Hot refuel checklist 7-26
Post-refuel/hot seat checklist 7-26

Hot seating procedures 7-2

Hot-weather operation 17-9
Desert operation 17-9
Preparation for flight 17-9

Hover 9-5

Hover checks 10-9

Hovering charts 24-1

Page No.

Hovering endurance chart 27-1

Humidity 6-1

Hydraulic:
Hydraulic control switch 2-28
Hydraulic power cylinder malfunction 14-17
Hydraulic power supply system 2-26
Hydraulic system failure 14-17
Hydraulic system malfunctions 14-17
Servicing hydraulic system 3-8

Hydraulic control switch 2-28

Hydraulic power cylinder malfunction 14-17

Hydraulic power supply system 2-26
Flight control servo units 2-28
Hydraulic control switch 2-28

Hydraulic system failure 14-17

Hydraulic system malfunctions 14-17
Hydraulic power cylinder malfunction 14-17
Hydraulic system failure 14-17

Hydraulics check 7-20

I

Icing 14-30

ICS/radio selector panel failure 14-30

IFR CRM and callouts 20-9
All phases of instrument flight 20-9
Approach & landing 20-10
En route and holding 20-10
Missed callouts 20-9
Takeoff & departure 20-10

Imminent transmission failure 14-9

Implementation 21-1

Importance of proper procedures 18-1

In flight 17-7

Inadvertent entry into instrument meteorological conditions 14-27
Four helicopters 14-28
Single helicopter inadvertent IMC procedure 14-27
Two helicopters 14-28

Page No.

Indications, Single instrument indications 14-24

Indicator:
Airspeed indicator 2-36
Battery overtemperature indicator system 2-26
Course deviation indicator KDI-206 (C) 18-15
Fuel pressure indicator 2-20
Fuel quantity indicator 2-17, 14-26
Horizontal situation indicator KDI-525A (C) 18-20
Instantaneous vertical speed indicator (C) 2-36
Rotor rpm indicator 2-14
Turbine outlet temperature indicator 2-10
Vertical speed indicator (B) 2-36

Indicators:
Engine instruments and indicators 2-4
Turn-and-slip indicators 2-36

Inspection:
Exterior inspection 7-2
Postflight external inspection 7-29
Preflight inspection 7-1, 7-2

Installation and removal of ground handling wheels 3-5

Instantaneous vertical speed indicator (C) 2-36

Instrument:
All phases of instrument flight 20-9
Inadvertent entry into instrument meteorological conditions 14-27
Instrument lights 2-46
Instrument markings 4-1
Instrument takeoff 17-2
Instrument variation 22-2
Night and instrument flights 5-6
Simulated instrument flight 17-1
Single instrument indications 14-24

Instrument approaches 17-4

Instrument autorotation 9-4

Instrument autorotations 17-4

Instrument climb 17-2

Instrument cruise flight 17-3

Instrument flight checklist 7-22

Page No.

Instrument flight procedures 17-1
After engine/rotor start 17-2
Descent 17-3
Electronic equipment 17-3
Holding 17-3
Instrument approaches 17-4
Instrument autorotations 17-4
Instrument climb 17-2
Instrument cruise flight 17-3
Instrument takeoff 17-2
Level-off checklist 17-3
Lightning strikes 17-4
Required equipment 17-1
Simulated instrument flight 17-1
Speed range 17-3
Start 17-2

Instrument lights 2-46

Instrument markings 4-1

Instrument takeoff 17-2

Instrument variation 22-2

Instruments 2-35
Airspeed indicator 2-36
Altimeters 2-36
Compass heading system 2-36
Engine instruments and indicators 2-4
Gyro instruments 14-26
Instantaneous vertical speed indicator (C) 2-36
Instruments 2-35
Magnetic-compass (standby) 2-36
Pitot static system (B) 2-36
Pitot static system (C) 2-35
Pitot-static instruments 14-26
Radar altimeters 2-37
Turn-and-slip indicators 2-36
Vertical speed indicator (B) 2-36

Intercom control (C) 18-2

Interior lights 2-46
Cabin lights 2-46
Cockpit lights 2-46
Instrument lights 2-46

Internal cargo 6-2
Systematic risk and error management 20-2

Page No.

Inverter failure (C) 14-14
Avionics inverter failure (C) 14-14
FCS inverter failure (C) 14-14

Inverters (C) 2-26

J

Jammed flight controls and other flight control malfunctions 14-19

K

KTR-909 UHF radio (C) 18-8

L

Landing 17-8
Approach & landing 20-10
Confined area landing 7-26
Definition of landing terms 12-1
Emergency landing 16-2
Emergency landing (crew/passengers) 16-3
Emergency landing (pilot/copilot) 16-3
Field deck landing practice 8-5
Landing checklist 7-26
Landing gear system 2-35
Landing in the trees 15-2
Landing light 2-45
Landing signalman enlisted 8-4
Landing site evaluation 17-10
No-hover landing 7-25
Preparation for emergency landing 16-2
Sliding landing 7-25
Vertical landing from a hover 7-25

Landing checklist 7-26

Landing gear system 2-35

Landing in the trees 15-2

Landing light 2-45

Landing signalman enlisted 8-4

Landing site evaluation 17-10

Landings:
Confined area landings 20-11
Crosswind landings and takeoffs 11-6
Formation takeoffs and landings 9-8
Precautionary landings 12-1
Slope landings and takeoffs 11-6
Types of landings 7-25

Page No.

Launch procedures 8-5

Lead changes 9-6

Level flight characteristics at various speeds 11-1

Level-off checklist 7-23, 17-3

Lever, Collective pitch control lever 2-30

Light:
- Fuel pump caution light 2-20
- Landing light 2-45
- Transmission oil pressure caution light 2-16
- Transmission oil temperature caution light 2-16

Lighting:
- Aircraft lighting 18-21

Lighting equipment 2-44
- Exterior lights 2-44
- Interior lights 2-46

Lightning strikes 17-4

Lights:
- Anticollision lights 2-44
- Cabin lights 2-46
- Chip detector warning lights 2-43
- Cockpit lights 2-46
- Exterior lights 2-44
- Instrument lights 2-46
- Interior lights 2-46
- Position lights 2-44

Limitations:
- Altitude limitations 4-8
- Engine limitations 4-1
- Rotor brake limitations 4-7
- Rotor limitations 4-7
- Standby generator limitations (C) 4-7
- Starter limitations 4-7
- Weight limitations 4-9

Limits:
- Acceleration limits 4-9
- Airspeed limits 4-8
- Airspeed operating limits chart 29-1
- Climb/descent limits 4-9
- Transmission oil system limits 4-7
- Weight and center-of-gravity limits 4-9

Page No.

Longitudinal center-of-gravity limits 4-11

Loss of tail rotor authority 11-10

Loss of tail rotor effectiveness 11-9, 14-24

Loss of tail rotor effectiveness (unanticipated right yaw) 11-7
- Loss of tail rotor effectiveness 11-9
- Loss of translational lift 11-9
- Main rotor disk vortex (285° to 315°) 11-7
- Recovery procedure 11-9
- Tail rotor vortex ring state (210° to 330°) 11-7
- Weathercock stability (120° to 240°) 11-7

Loss of translational lift 11-9

Lost plane procedures 14-27

Low rpm recovery 9-4

Low-frequency vibrations 11-10

Low-g maneuvering 11-1
- Recovery procedure 11-2

M

Magnetic-compass (standby) 2-36

Main drive shaft failure 14-7

Main generator failure 14-12

Main rotor 2-13

Main rotor disk vortex (285° to 315°) 11-7

Maintenance step 3-5

Malfunction 21-2

Maneuvering flight 11-1

Marker beacon (KR-21 and KA-40) (C) 18-10
- Operation 18-10

Mast bumping 11-2, 14-12
- Recovery procedure 11-3

Maximum endurance and maximum rate of climb 26-1

Maximum load takeoff 7-21

Maximum power takeoff 7-21

Maximum range 26-1

Medium-frequency vibrations 11-11

Memory items 12-1

Page No.

Minimum crew requirements 4-11

Ministab flight control system (C) 2-31
- AFCS controller 2-31
- Air data computer 2-35
- Computer 2-32
- Control tube/actuator assemblies 2-32
- System operational description 2-31
- Trim damper units 2-32

Miscellaneous equipment 2-48
- Ashtrays 2-49
- Data cases 2-48
- Exhaust duct cover 2-49
- Fire extinguisher 2-48
- First-aid kits 2-48
- Ground handling wheels 2-49
- Mooring fittings 2-49
- Pitot covers and intake plugs 2-49
- Rotor tiedown 2-49
- Tow rings 2-49

Missed callouts 20-9

Mission:
- Mission planning 6-1
- Mission specific CRM procedures 20-9

Mission planning 6-1
- Briefing 6-2
- Debriefing 6-6
- Factors affecting helicopter performance 6-1
- Fuel 6-2
- General precautions 6-2
- Introduction 6-1
- Weight and balance 6-2

Mission specific CRM procedures 20-9
- Confined area landings 20-11
- External loads 20-11
- Formation flights 20-11
- Functional checkflights 20-11
- IFR CRM and callouts 20-9
- Night vision device operations 20-11
- Overwater and shipboard operations 20-11
- Search and rescue 20-11
- Training 20-11

Monitoring pilot 20-7

Mooring fittings 2-49

Page No.

Mountain and rough terrain flying 17-9
- Adverse weather conditions 17-11
- Effects of high altitude 17-10
- Landing site evaluation 17-10
- Summary 17-11
- Turbulent air flight techniques 17-10
- Wind direction and velocity 17-9

Movement, Precautions in movement of helicopters 8-3

N

NATOPS evaluation 21-1

NATOPS evaluation forms 21-14

NATOPS evaluation question bank 21-13

NATOPS flight evaluation 5-4

NATOPS reevaluation 21-1

NAV 1 receiver (KNS-81) (C) 18-14
- Controls and functions 18-14
- Operation 18-15

NAV 2 receiver (KLN-900 GPS) (C) 18-17

NAV radio operation 18-5

Navigation, Navigation and NAVAIDS system (C) 18-13

Navigation and NAVAIDS system (C) 18-13

N_f rpm 4-1

N_g rpm 4-1

N_g tachometer or turbine outlet temperature system 14-24

Night:
- Night and instrument flights 5-6
- Night operations 8-4
- Night vision device operations 20-11
- Night vision device utilization 9-9
- Required equipment for night flight 4-12
- Unaided night operations 9-9

Night and instrument flights 5-6

Night operations 8-4
- Preflight/postflight 8-4
- Taxi and operations 8-4

Night vision device operations 20-11

Night vision device utilization 9-9
- General 9-9
- NVD briefing guide 9-10
- NVD crew brief 9-10
- NVD operations 9-10
- NVD physiology 9-9

Page No.

No-hover landing 7-25
No-hover takeoff 7-21
Normal approach 7-23
N_r and N_f tachometer malfunction 14-26
NVD briefing guide 9-10
NVD crew brief 9-10
NVD operations 9-10
NVD physiology 9-9

O

Observer 20-7
Observer brief (brief when observer does not attend full NATOPS brief) 6-6
Off, Ditching — power off 16-4
OFT/WST procedures evaluation 21-3
Oil:
- Airframe-mounted oil filter system 2-13
- Engine oil pressure 4-1
- Engine oil pressure gauge 2-11
- Engine oil temperature 4-2
- Engine oil temperature gauge 2-11
- Engine or transmission oil pressures 14-25
- Engine or transmission oil temperatures 14-26
- Oil supply system 2-11
- Servicing engine oil system 3-7
- Servicing transmission oil system 3-7
- Transmission oil cooler 2-14
- Transmission oil pressure caution light 2-16
- Transmission oil pressure gauge 2-16
- Transmission oil system 2-14
- Transmission oil system limits 4-7
- Transmission oil temperature caution light 2-16
- Transmission oil temperature gauge 2-16

Oil supply system 2-11
- Airframe-mounted oil filter system 2-13
- Engine oil pressure gauge 2-11
- Engine oil temperature gauge 2-11

On/off switches 1, 2, 3, 4, and 5 18-4
Open-book examination 21-2, 21-3

Page No.

Operation 18-4, 18-5, 18-10, 18-13, 18-15, 18-16, 18-21
- Cold-weather operation 17-5
- COMM radio operation 18-5
- Desert operation 17-9
- DME operation 18-10
- Engine ground operation 17-6
- Hot-weather operation 17-9
- NAV radio operation 18-5
- Pitot heater operation 2-48
- TACAN operation 18-11
- UHF radio operation 18-8

Operational risk management 20-2
- Five-step ORM process 20-2
- Four ORM principles 20-2
- Three levels of ORM 20-2
- Time critical ORM process (ABCD process) 20-2

Operations:
- Air-capable ship operations 8-5
- Flight deck operations 8-4
- Ground operations 7-1
- Hangar and flight deck operations 8-3
- Night operations 8-4
- Night vision device operations 20-11
- NVD operations 9-10
- Overwater and shipboard operations 20-11
- Prohibited operations 4-11
- Required equipment for over water and shipboard operations 4-12
- Tactical operations 9-8
- Taxi and operations 8-4
- Unaided night operations 9-9

Oral examination 21-2
Oral examination and OFT procedure check (if conducted) 21-3
Overhead approach 9-8
Overspeed control 2-4
- Accumulators 2-4

Overtorque/overspeed/overtemp 14-2
Overwater and shipboard operations 20-11

P

Panel:
- Caution panel 2-40
- Circuit breaker panel 2-25
- ICS/radio selector panel failure 14-30

Page No.

Panels, Receiver audio control panels (C) 18-3
Parade formation 9-6
Parade turns 9-6
Passenger seats 2-48
Performance discrepancies 22-2
Personal flying equipment 5-4, 5-6
All flights 5-6
Extended overwater flights 5-6
Night and instrument flights 5-6
Pilot:
Check pilot qualification 10-1
Duties of flying pilot 17-1
Duties of nonflying pilot 17-1
Flying pilot 20-7
Functional checkflight pilot 5-3
Monitoring pilot 20-7
Pilot and copilot seats 2-48
Pilot flight training 5-2
Pilot ground training 5-1
Pilot in command 20-6
Pilot qualified in model 5-2
Pilot technique 22-2
Pilot and copilot seats 2-48
Shoulder harness 2-48
Pilot flight training 5-2
Pilot ground training 5-1
Pilot in command 20-6
Pilot qualified in model 5-2
Pilot technique 22-2
Pilot/copilot 16-2
Pitot covers and intake plugs 2-49
Pitot heater 2-48
Pitot heater operation 2-48
Pitot static system (B) 2-36
Pitot static system (C) 2-35
Pitot-static instruments 14-26
Planning, Mission planning 6-1
Position 9-6
Position lights 2-44
Post shutdown fire (internal) 13-2

Page No.

Post-refuel/hot seat checklist 7-26
Postflight external inspection 7-29
Power:
Dc external power start receptacle 2-26
Ditching — power off 16-4
Ditching — power on 16-4
Electrical power system 2-20
Hydraulic power cylinder malfunction 14-17
Hydraulic power supply system 2-26
Maximum power takeoff 7-21
Power recovery autorotation 9-1
Power required exceeds power available 11-3, 14-5
Turbine power control 2-4
Power recovery autorotation 9-1
Power required exceeds power available 11-3, 14-5
Recovery procedure 11-4
Powerplant 2-1
Engine anti-icing system 2-1
Engine instruments and indicators 2-4
Fuel control 2-4
Overspeed control 2-4
Turbine power control 2-4
Twist grip (throttle) 2-3
Practice autorotations 9-1
Full autorotation 9-2
Instrument autorotation 9-4
Low rpm recovery 9-4
Power recovery autorotation 9-1
Precautionary landings 12-1
Precautions in movement of helicopters 8-3
Preflight inspection 7-1, 7-2
Aft fuselage (left side) 7-9
Aft fuselage (right side) 7-7
Aircraft 7-2
Cockpit 7-2
Engine compartment (left side) 7-9
Engine compartment (right side) 7-7
Forward fuselage (left side) 7-11
Forward fuselage (right side) 7-6
Fuselage (front section) 7-12
Rotor system 7-11
Tail rotor 7-8
Tailboom (left side) 7-9
Tailboom (right side) 7-8

Page No.

Transmission access door (left side) 7-10
Transmission access door (right side) 7-6
Upper forward cowling access door (left side) 7-11
Upper forward cowling access door (right side) 7-6
Upper fuselage area 7-10

Preflight/postflight 8-4

Preheating 17-6

Preparation for emergency landing 16-2
Crash position 16-2

Preparation for flight 17-5, 17-9

Pressure:
Engine oil pressure 4-1
Engine oil pressure gauge 2-11
Fuel pressure (indicated) 4-7
Fuel pressure indicator 2-20
Transmission oil pressure caution light 2-16
Transmission oil pressure gauge 2-16

Pressure altitude 23-1

Prestart 7-12

Pretakeoff 7-16

Procedure:
Oral examination and OFT procedure check (if conducted) 21-3
Recovery procedure 11-2, 11-3, 11-4, 11-6, 11-7, 11-9, 11-11
Single helicopter inadvertent IMC procedure 14-27

Procedures 10-2
Checklist procedures 20-7
Communications procedures 5-4
Emergency procedures 8-4
General CRM procedures 20-7
Hot seating procedures 7-2
Importance of proper procedures 18-1
Instrument flight procedures 17-1
Launch procedures 8-5
Lost plane procedures 14-27
Mission specific CRM procedures 20-9
OFT/WST procedures evaluation 21-3
Procedures 10-2
Recovery procedures 8-10
RMI slaving procedures 17-5

Page No.

Process:
Five-step ORM process 20-2
Time critical ORM process (ABCD process) 20-2

Prohibited maneuvers 4-12

Prohibited operations 4-11

Publications and related directives 5-4

Pump:
Fuel boost pump failure 14-10
Fuel pump caution light 2-20

Purpose 22-1

Q

Qualification:
Air-capable ship qualification 8-1
Check pilot qualification 10-1
Qualification and currency requirements 8-1

Qualification and currency requirements 8-1
Air-capable ship qualification 8-1

Qualifications 5-2, 5-3
Aircrewman 5-3
Assignment requirements 5-3
Functional checkflight pilot 5-3
Pilot qualified in model 5-2
Requirements and designations 5-3

Qualified 21-1, 21-3

Question bank 21-14

Quick stop 9-8

R

Radar altimeters 2-37
Controls and function 2-40

Radio:
COMM radio operation 18-5
KTR-909 UHF radio (C) 18-8
NAV radio operation 18-5
UHF radio (AN/ARC-159 (V1)) (B) 18-6
UHF radio operation 18-8
VHF radio (KX155) (B) 18-5
VHF radio KY-196 (C) 18-4

Radius of turn at constant airspeed chart 29-1

Page No.

Receiver:
- NAV 1 receiver (KNS-81) (C) 18-14
- NAV 2 receiver (KLN-900 GPS) (C) 18-17
- Receiver audio control panels (C) 18-3

Receiver audio control panels (C) 18-3

Records and reports 21-13
- NATOPS evaluation forms 21-14
- NATOPS evaluation question bank 21-13

Recovery:
- Low rpm recovery 9-4
- Power recovery autorotation 9-1

Recovery procedure 11-2, 11-3, 11-4, 11-6, 11-7, 11-9, 11-11

Recovery procedures 8-10

Refuel, Hot refuel checklist 7-26

Relative winds 8-5

Rendezvous 9-8
- Carrier-type rendezvous 9-8
- Running rendezvous 9-8

Reporting, Discrepancy reporting 7-2

Reports, Records and reports 21-13

Required equipment 17-1

Required equipment for IMC flight 4-11

Required equipment for night flight 4-12

Required equipment for over water and shipboard operations 4-12

Requirements 5-3
- Annual flying and currency requirements 5-6
- Assignment requirements 5-3
- Current requirements 5-4
- Flightcrew designation, qualifications, and requirements 5-2
- Minimum crew requirements 4-11
- Qualification and currency requirements 8-1
- Requirements and designations 5-3

Requirements and designations 5-3

Responsibilities 9-8

Rigging 22-2

RMI slaving procedures 17-5

Page No.

Rotor:
- Complete loss of tail rotor thrust 14-21
- Engine overspeed (N_f) rotor rpm (N_r) 14-6
- Loss of tail rotor authority 11-10
- Loss of tail rotor effectiveness 11-9, 14-24
- Loss of tail rotor effectiveness (unanticipated right yaw) 11-7
- Main rotor 2-13
- Main rotor disk vortex (285° to 315°) 11-7
- Rotor blade stall 11-6, 14-19
- Rotor brake (C) 2-14
- Rotor brake limitations 4-7
- Rotor droop 11-10
- Rotor limitations 4-7
- Rotor rpm indicator 2-14
- Rotor rpm warning system 2-43
- Rotor system 2-13, 7-11
- Rotor tiedown 2-49
- Tail rotor 2-14, 7-8
- Tail rotor drive 2-14
- Tail rotor failure and directional control malfunctions 14-20
- Tail rotor gearbox 2-17
- Tail rotor vortex ring state (210° to 330°) 11-7

Rotor blade stall 11-6, 14-19
- Recovery procedure 11-7

Rotor brake (C) 2-14

Rotor brake limitations 4-7

Rotor droop 11-10

Rotor limitations 4-7

Rotor rpm indicator 2-14

Rotor rpm warning system 2-43
- Audio-mute switch 2-44

Rotor system 2-13, 7-11
- Main rotor 2-13
- Rotor brake (C) 2-14
- Rotor rpm indicator 2-14
- Tail rotor 2-14
- Tail rotor drive 2-14

Rotor tiedown 2-49

Rule, Two-challenge rule 20-8

Running rendezvous 9-8

Page No.

S

Safety 5-4

Scheduling 7-1

Search and rescue 20-11

Searchlight 2-45

Seat, Post-refuel/hot seat checklist 7-26

Seating:
- Hot refueling/hot seating 7-26
- Hot seating procedures 7-2

Seats:
- Passenger seats 2-48
- Pilot and copilot seats 2-48

Securing the aircraft 8-3

Service ceiling charts 25-5

Servicing:
- Engine servicing 17-5
- Fueling and servicing 3-1
- Servicing hydraulic system 3-8
- Servicing transmission oil system 3-7

Servicing engine oil system 3-7

Servicing guidelines 3-7
- Servicing engine oil system 3-7

Servicing hydraulic system 3-8

Servicing transmission oil system 3-7

Setting preset channels 18-7

Seven CRM skills 20-3

Shaft horsepower vs. torque chart 23-1

Shoulder harness 2-48

Shutdown 7-28

Shutdown checklist 7-28

Simulated engine failures 9-5
- Air taxi 9-5
- Hover 9-5

Simulated instrument flight 17-1

Single helicopter inadvertent IMC procedure 14-27

Single instrument indications 14-24
- Engine or transmission oil pressures 14-25
- Engine or transmission oil temperatures 14-26
- Fuel quantity indicator 14-26
- Gyro instruments 14-26
- N_g tachometer or turbine outlet temperature system 14-24
- N_r and N_f tachometer malfunction 14-26
- Pitot-static instruments 14-26
- Torquemeter 14-25

Skills, Seven CRM skills 20-3

Sliding landing 7-25

Slope landings and takeoffs 11-6

Smoke and fume elimination 14-16

Spatial disorientation 20-8
- Two-challenge rule 20-8

Special instructions 6-5, 12-1
- Definition of landing terms 12-1
- Memory items 12-1
- Precautionary landings 12-1

Specific conditions 22-2

Speed:
- Instantaneous vertical speed indicator (C) 2-36
- Speed range 1-1, 17-3
- Vertical speed indicator (B) 2-36

Speed range 1-1, 17-3

Sprag clutch seizure 14-8

Sprag clutch slippage 14-8

Stall:
- Compressor stall 14-2
- Rotor blade stall 11-6, 14-19

Standby battery (C) 2-26

Standby generator (C) 2-25

Standby generator failure (C) 14-14

Standby generator limitations (C) 4-7

Start 7-14, 17-2

Starter limitations 4-7

Starter-generator system 2-25

Static differential 3-1

Steep approach 7-25

Sterile cockpit 20-6

Subarea 21-2

Summary 17-11

Page No.

Survival and first aid 5-4

Suspected fuel leakage 14-11

Switch:
- Audio-mute switch 2-44
- Battery switch 2-25
- Bright/dim switch 2-42
- Hot mike switch 18-4
- Hydraulic control switch 2-28
- Test switch 2-42
- VOL switch 18-4

Switches, On/off switches 1, 2, 3, 4, and 5 18-4

Syllabus:
- Flight training syllabus 5-1
- Ground training syllabus 5-1
- Ground training syllabus (flight line training) 5-5

System:
- Airframe-mounted oil filter system 2-13
- Battery overtemperature indicator system 2-26
- Chip detector system 2-43
- Compass heading system 2-36
- DME/TACAN system (KTU-709) (C) 18-10
- Electrical power system 2-20
- Emergencies and system failures 20-7
- Engine anti-icing system 2-1
- Engine failure warning system 2-43
- Environmental control system 2-46, 7-27
- Environmental control system malfunctions 14-28
- Fire detector system 2-43
- Flight control system 2-28
- Force trim system 2-31
- Fuel supply system 2-17
- Hydraulic power supply system 2-26
- Hydraulic system failure 14-17
- Hydraulic system malfunctions 14-17
- Landing gear system 2-35
- Ministab flight control system (C) 2-31
- Navigation and NAVAIDS system (C) 18-13
- N_g tachometer or turbine outlet temperature system 14-24
- Oil supply system 2-11
- Pitot static system (B) 2-36
- Pitot static system (C) 2-35
- Rotor rpm warning system 2-43
- Rotor system 2-13, 7-11
- Servicing engine oil system 3-7
- Servicing hydraulic system 3-8
- Servicing transmission oil system 3-7
- Starter-generator system 2-25
- System operational description 2-31
- TH-57B communications and audio system 18-4
- TH-57C communication system 18-3
- TH-57C communications audio system 18-2
- Transmission oil system 2-14
- Transmission oil system limits 4-7
- Transmission system 2-14
- Ventilating system 2-46

System operational description 2-31

Systematic risk and error management 20-2

T

TACAN operation 18-11

Tactical approaches 9-8
- Overhead approach 9-8

Tactical formations 9-6

Tactical maneuvers 9-8
- High-speed approach 9-8
- Quick stop 9-8

Tactical operations 9-8
- Tactical approaches 9-8
- Tactical maneuvers 9-8

Tail rotor 2-14, 7-8

Tail rotor drive 2-14

Tail rotor failure and directional control malfunctions 14-20
- Complete loss of tail rotor thrust 14-21
- Fixed pitch left pedal (high power) 14-23
- Fixed pitch right pedal (low power) 14-22
- Loss of tail rotor effectiveness 14-24

Tail rotor gearbox 2-17

Tail rotor vortex ring state (210° to 330°) 11-7

Tail skid 2-35

Tailboom 2-35

Page No.

Tailboom (left side) 7-9

Tailboom (right side) 7-8

Takeoff 17-7
- Confined area takeoff 7-21
- Crosswind takeoff 7-21
- Instrument takeoff 17-2
- Maximum load takeoff 7-21
- Maximum power takeoff 7-21
- No-hover takeoff 7-21
- Vertical takeoff to hover 7-21

Takeoff & departure 20-10

Takeoff chart 24-1

Takeoff checklist 7-20

Takeoff gross weight 1-1

Takeoffs:
- Crosswind landings and takeoffs 11-6
- Formation takeoffs and landings 9-8
- Slope landings and takeoffs 11-6

Taxi 17-8

Taxi and operations 8-4

Technique, Pilot technique 22-2

Techniques, Turbulent air flight techniques 17-10

Temperature 6-1

Temperature conversion chart 23-1

Test:
- Derived from flight test 22-2
- Flight test data 22-2

Test switch 2-42

TH-57B communications and audio system 18-4
- Controls and functions 18-4

TH-57B general description 2-20

TH-57B/C door emergency jettisoning handles 16-1

TH-57B/C door handles 16-1

TH-57C Ac and Dc voltmeter 2-25

Page No.

TH-57C communication system 18-3
- Controls and functions 18-3
- Operation 18-4
- TH-57B communications and audio system 18-4

TH-57C communications audio system 18-2
- Intercom control (C) 18-2
- Receiver audio control panels (C) 18-3

TH-57C general description 2-20

The helicopter 1-1

Three levels of ORM 20-2

Tiedown, Rotor tiedown 2-49

Time and range vs. fuel chart 26-1

Time critical ORM process (ABCD process) 20-2

Torque 4-7

Torque (percent Q) 26-1

Torque available charts 23-1

Torquemeter 2-4, 14-25

Tow rings 2-49

Training 20-11
- Aircrew flight training 5-2
- Aircrew ground training 5-1
- Flight training syllabus 5-1
- Ground training 5-4
- Ground training syllabus 5-1
- Ground training syllabus (flight line training) 5-5
- Pilot flight training 5-2
- Pilot ground training 5-1
- Training 20-11

Transmission:
- Engine or transmission oil pressures 14-25
- Engine or transmission oil temperatures 14-26
- Engine to transmission drive 2-13
- Imminent transmission failure 14-9
- Servicing transmission oil system 3-7

Transmission access door (left side) 7-10

Transmission access door (right side) 7-6

Transmission chip detectors 2-17

Transmission oil cooler 2-14

Transmission oil pressure caution light 2-16

Page No.

Transmission oil pressure gauge 2-16

Transmission oil system 2-14

Transmission oil system limits 4-7

Transmission oil temperature caution light 2-16

Transmission oil temperature gauge 2-16

Transmission system 2-14
Transmission oil system 2-14

Transmit — interphone selector 18-4

Transponder (KT-79A) and altitude encoder (KE-127) 18-9
Controls and functions 18-9
Operation 18-10

Trim:
Force trim system 2-31

Trim damper units 2-32

Turbine outlet temperature 4-2

Turbine outlet temperature indicator 2-10

Turbine power control 2-4

Turbulent air flight techniques 17-10

Turn-and-slip indicators 2-36

Twist grip (throttle) 2-3

Two helicopters 14-28

Two-challenge rule 20-8

Types of approaches 7-23
Normal approach 7-23
Steep approach 7-25

Types of landings 7-25
Confined area landing 7-26
No-hover landing 7-25
Sliding landing 7-25
Vertical landing from a hover 7-25

Types of takeoff 7-21
Confined area takeoff 7-21
Crosswind takeoff 7-21
Maximum load takeoff 7-21
Maximum power takeoff 7-21
No-hover takeoff 7-21
Vertical takeoff to hover 7-21

Page No.

U

UHF radio (AN/ARC-159 (V1)) (B) 18-6
Controls and functions 18-6
Function selector 18-7
Setting preset channels 18-7

UHF radio operation 18-8

Unaided night operations 9-9

Uncommanded right roll during flight below 1g 14-19

Underspeeding N_f/N_r 14-4

Underwater egress 16-5

Unit, Freewheeling unit 2-13

Units:
Flight control servo units 2-28
Trim damper units 2-32

Unqualified 21-2, 21-3

Upper forward cowling access door (left side) 7-11

Upper forward cowling access door (right side) 7-6

Upper fuselage area 7-10

V

Ventilating system 2-46

Vertical fin 2-35

Vertical landing from a hover 7-25

Vertical speed indicator (B) 2-36

Vertical takeoff to hover 7-21

VHF radio (KX155) (B) 18-5
COMM radio operation 18-5
NAV radio operation 18-5

VHF radio KY-196 (C) 18-4
Operation 18-5

Vibration identification 11-10
High-frequency vibrations 11-11
Low-frequency vibrations 11-10
Medium-frequency vibrations 11-11
Recovery procedure 11-11

Page No.

Visual communications 18-21
Aircraft lighting 18-21
Ground-to-air signals 18-21

VOL switch 18-4

Voltage regulator 2-20

Vortex ring state 11-3, 14-20
Recovery procedure 11-3

W

Waiver 5-4

Waivers 5-6

Wash 7-14

Waveoff 7-26

Weather 6-5

Page No.

Weathercock stability (120° to 240°) 11-7

Weight:
Takeoff gross weight 1-1
Weight and balance 6-2
Weight and center-of-gravity limits 4-9
Weight limitations 4-9

Weight and balance 6-2
Internal cargo 6-2

Weight and center-of-gravity limits 4-9
Longitudinal center-of-gravity limits 4-11

Weight limitations 4-9

Wind 6-2

Wind component chart 29-1

Wind direction and velocity 17-9

Workload management and
task saturation 20-4